GE Energy
Industrial Solutions

WORLDWIDE PARTNER

Record Plus Ed. 05

Moulded Case Circuit Breakers
Selective & Current Limiting

GE imagination at work

Moulded case circuit breakers - Selective and current limiting

The breaker

Order codes A

Trip units B

Components & Accessories C

Technical data D

Application guide E

Wiring diagrams F

Dimensions G

Numerical Index X

EN 60947-2 Standard

Circuit Breaker type		FD160		FD160						FE160		
Denomination		N	H	C	E	S	N	H	L	N	H	L
Poles	Number of	1		3,4			2[1],3,4			3,4		
Rated insulation voltage	Ui (Volts)	750		500	750	750	750			750		
Rated impulse withstand voltage	Uimp (Kilovolt)	3		6	8	8	8			8		
Rated operational voltage Ue	Volts AC	240		500	690	690	690			690		
	Volts DC	250		-	-	500	500			500		
Line Protection device												
Category of use		A		A			A			A		
Suitable for use as a isolator	Positive ON & OFF	yes		yes			yes			yes		
Rated current Ith = Ie	A at 40°C	160		160			160			160		
Ultimate breaking capacity Icu (kA)	230/240V AC	25	50	25	40	50	85	100	200	85	100	200
	400/415V AC	-	-	18	25	36	50	80	150	50	80	150
	440V AC	-	-	14	14	25	30	65	130[4]	42	65	130
	500V AC	-	-	10	12	18	22	36	50[4]	30	50	100
	690V AC	-	-	-	4,5	6	8	10	12	10	22	75
	250V DC Single pole	-	50	-	-	25	40	65	100	50	85	100
	500V DC Two Pole	-	-	-	-	25	40	65[2]	100[2]	50	85[2]	100[2]
Service breaking capacity Ics (%Icu)	≤ 500V	100%	100%	75%	75%	100%	100%	100%	100%	100%	100%	100%
	690V AC	-	-	-	-	50%	50%	50%	50%	100%	75%	25%
Making capacity Icm (kA peak)	400/415V AC	-	-	36	52,5	75	110	176	330	110	176	330
	500V AC	-	-	17	24	36	46	75	110	63	110	220
Single phase breaking capacity I_{IT} (kA)	230V AC	25	50	16	25	30	50	80	150	50	80	150
	400/415V AC	-	-	-	4,5	6	8	10	12	15	22	36
Endurance (CO operations)	Mechanical	10000		10000			25000			40000		
	Electrical at In	5000		5000			10000			20000		
	Electrical at In/2	10000		10000			20000			30000		
Endurance (On-Tripped operations)	Mechanical	4000		4000			10000			16000		
Trip Units	Interchangeable	no		no			no			yes		
	Thermal Magnetic line	LTM								LTM		
	Thermal Magnetic generator						GTM			GTM		
	Thermal Magnetic discriminating					LTMD				LTMD		
	Magnetic Only						Mag Break™			Mag Break™		
	Electronic discriminating									SMR1		
	Electronic enhanced											

NEMA AB-1 Standard

3 ph, Interruption rating	240V AC	-	-	-	-	50	65	100	-	100	150	200
	480V AC	-	-	-	-	25	36	50	-	50	65	130
	600V AC	-	-	-	-	6	8	10	-	25	36	42

EN 60947-3 Standard

Non Automatic Circuit Breaker/Switch type		FD160			FE160		
Denomination		Y - 63A		Y - 160A	Y		
Rated current In (class AC23)	220V AC to 690V AC	63		160	160		
Rated making capacity	Icm (kA peak)	1,7		2,8	4,2		
Short-term withstand current Icw (A)	Icw eff. 1 second	1,2		2	3		
	Icw eff. 3 seconds	1,2		2	3		

EN 60947-4 Standard

Use in motor circuits							
Rated current Ith	A at 65°C			125	150		
Endurance (CO operations)	Mechanical			25000	40000		
	Electrical at In class AC23			10000	20000		
	Operations per hour			120	120		
Protection	Short Circuit only (separate overload device)			Mag Break™	Mag Break™		
	Overload class 10 and Short circuit				SMR1		
	Max In (A) class 10			100	150		
	Max In (A) class 30			50	150		
	Earth fault unit (differential)			Optional FDQ type	Optional FEQ type		

Installation

Circuit Breaker or Switch type		FD160			FE160		
Number of poles		1	3	4	3		4
Mounting	On symmetrical DIN Rail	yes	yes	yes	no		no
	Fixed	yes	yes	yes	yes		yes
	Plug-in	no	yes	yes	yes		yes
	Draw-out	no	no	no	yes		yes
Connection	Front	yes	yes	yes	yes		yes
	Rear	yes	yes	yes	yes		yes
Dimensions (w x h x d) mm	Fixed front connection	27x130 x85	81x130 x85	108x130 x85	105x170 x95		140x265 x115
Weights (kg)	Fixed front connection	0,4	0,9	1,3	1,5		2

(1) N type only
(2) 3 poles are needed.
(3) 2 poles are needed
(4) The 160Amp current rating of the L type is limited to 65kA at 440v & 36kA at 500V.

	FE250			FG400			FG630			FK800			FK1250			FK1600	
V	N	H	L	N	H	L	N	H	L	N	H	L	N	H	L	N	H
	3,4			3,4			3,4			3,4			3,4			3,4	
690	750			750			750			1000			1000			1000	
8	8			8			8			8			8			8	
500	690			690			690			690			690			690	
250	500			500			500			500			500			500	
	A			B			B(5)			B			B			B	
	yes			yes			yes			yes			yes			yes	
	250			400			630			800			1250			1600	
65	85	100	200	90	100	200	85	100	200	85	100	170	85	100	170	85	100
36	50	80	150	50	80	150	50	80	150	50	80	100	50	80	100	50	80
25	42	65	130	42	65	130	42	65	130	42	50	80	42	50	80	42	50
18	30	50	100	30	50	100	30	50	100	36	42	50	36	42	50	36	42
-	10	15	22	10	22	75(7)	10	22	40(7)	20	25	30	20	25	30	20	25
25	50	85	100							50	80	100	50	80	100	-	-
-	50	85(2)	100(2)							36	50	65	36	50	65	-	-
100%	100%	100%	100%	100%	100%	100%	100%	100%	100%	100%	100%	100%	100%	100%	100%	100%	100%
-	100%	75%	50%	100%	75%	25%	100%	75%	50%	100%	100%	75%	100%	75%	50%	100%	75%
75	110	176	330	110	176	330	110	176	330	110	176	220	110	176	220	110	176
36	63	110	220	63	110	220	63	110	220	75	110	220	75,6	110	220	75	110
36	50	80	150	50	80	150	50	80	150	50	80	150	50	80	150	50	80
-	10	15	22	10	(6)	(6)	10	(6)	(6)	20	25	30	20	25	30	20	25
10000	25000			20000			20000			10000			10000			10000	
5000	10000			7500			5000			4000			3000			2000	
10000	20000			15000			10000			8000			6000			4000	
4000	10000			8000			8000			4000			3000			2000	
	yes			yes			yes			yes			yes			yes	
LTM										LTM			LTM				
	GTM																
	LTMD																
	Mag Break™			Mag Break™													
	SMR1			SMR1									SMR1e				
	SMR2			SMR2									SMR 1s & g				

65	**100**	**150**	**200**	**100**	**150**	**200**	**100**	**150**	**200**	**85**	-	-	**85**	-	-	**85**	-
36	**50**	**65**	**130**	**50**	**65**	**130**	**50**	**65**	**130**	**42**	-	-	**42**	-	-	**42**	-
22	**25**	**36**	**42**	**25**	**36**	**42**	**25**	**36**	**42**	**25**	-	-	**25**	-	-	**25**	-

	FE250			FG400			FG630			FK800			FK1250			FK1600	
	Y			Y			Y			Y			Y			Y	
	250			400			630			800			1250			1600	
	5,7			7,1			9,2			14,1			21,2			28,3	
	4			5			6,5			10			15			20	
	4			5			6,5			10			15			20	

	230			400			500			720			1000				
	25000			20000			20000			10000			10000				
	10000			7500			5000			4000			3000				
	120			120			60			60			60				
	Mag Break™			Mag Break™			Mag Break™			Mag Break™			Mag Break™				
	SMR1			SMR1 or SMR2			SMR1 or SMR2										
	225			400			500			720			1000				
	225			400			500			720			1000				
	Optional FEQ type			Optional FGQ type			Optional FGQ type										

	FE250			FG400			FG630			FK800			FK1250			FK1600	
	3		4	3		4	3		4	3		4	3		4	3	4
	no		no	no		no	no		no	no		no	no		no	no	no
	yes		yes	yes		yes	yes		yes	yes		yes	yes		yes	yes	yes
	yes		yes	yes		yes	yes		yes	yes		yes	yes		yes	yes	yes
	yes		yes	yes		yes	yes		yes	yes		yes	yes		yes	yes	yes
	yes		yes	yes		yes	yes		yes	yes		yes	yes		yes	yes	yes
	yes		yes	yes		yes	yes		yes	yes		yes	yes		yes	yes	yes
	105x170		140x265	140x265		185x265	140x265		185x265	210x320		280x320	210x320		280x320	210x320	280x320
	x95		x115	x115		x115	x115		x115	x160		x160	x160		x160	x160	x160
	1,5		2,0	4,5		6,0	4,5		6,0	12,2		15,1	18,0		23,4	18,0	23,4

(5) Limited to 500Amp
(6) Please contact your nearest GE Sales Office

(7) At a voltage of 690V the uses of a long widened Shield is mandatory (see page D.9)

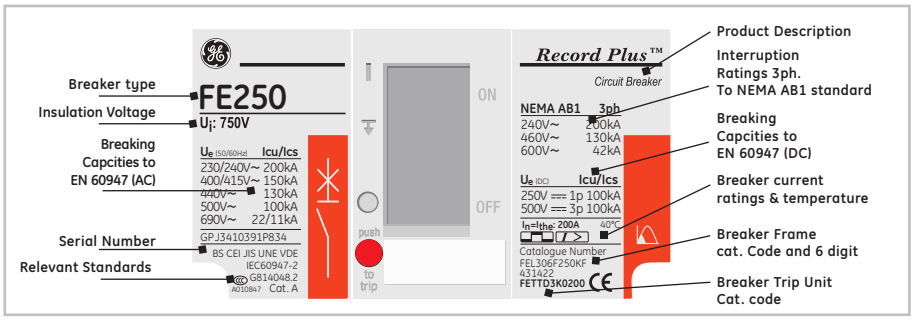

Certification

The ***Record Plus***™ line of circuit breakers has been designed to comply with the following standards:

EN 60947 Low-voltage switchgear and controlgear

EN 60947-1:	General rules
EN 60947-2:	Circuit-breakers
EN 60947-3:	Switches, disconnectors, switch-disconnectors and fuse-combination units
EN 60947-4-1:	Contactors and motor-starters
Section One:	Electromechanical contactors and motorstarters
EN 60947-5-1:	Control circuit devices and switching elements
Section One:	Electromechanical control circuit devices

This compliance has been verified by three authorities; the Kema, the CCC organization and Lovag. (Appropiate certificates can be made available on request)

Meeting the international standards. The requirements are met of **BS, VDE, UTE, KEMA, CEI**. Record Plus breakers have been tested in acordance with the NEMA standards

For the Record Plus product certificates are available from the following regulatory bodies:
Germanische Lloyds - RINA
Lloyds Register of Shipping - CCC (China)
Further tests are being undertaken to meet the requirements of the following regulatory bodies:
Bureau Veritas - Det Norske Veritas

Please contact us to check the availability of individual certificates.

A UL489 certified variant of the Record Plus line of Molded Case Circuit Breakers is also available. The line covers three frame sizes with current ratings of 3 to 600Amps. Please contact our GE sales offices in the U.S.A for further details.

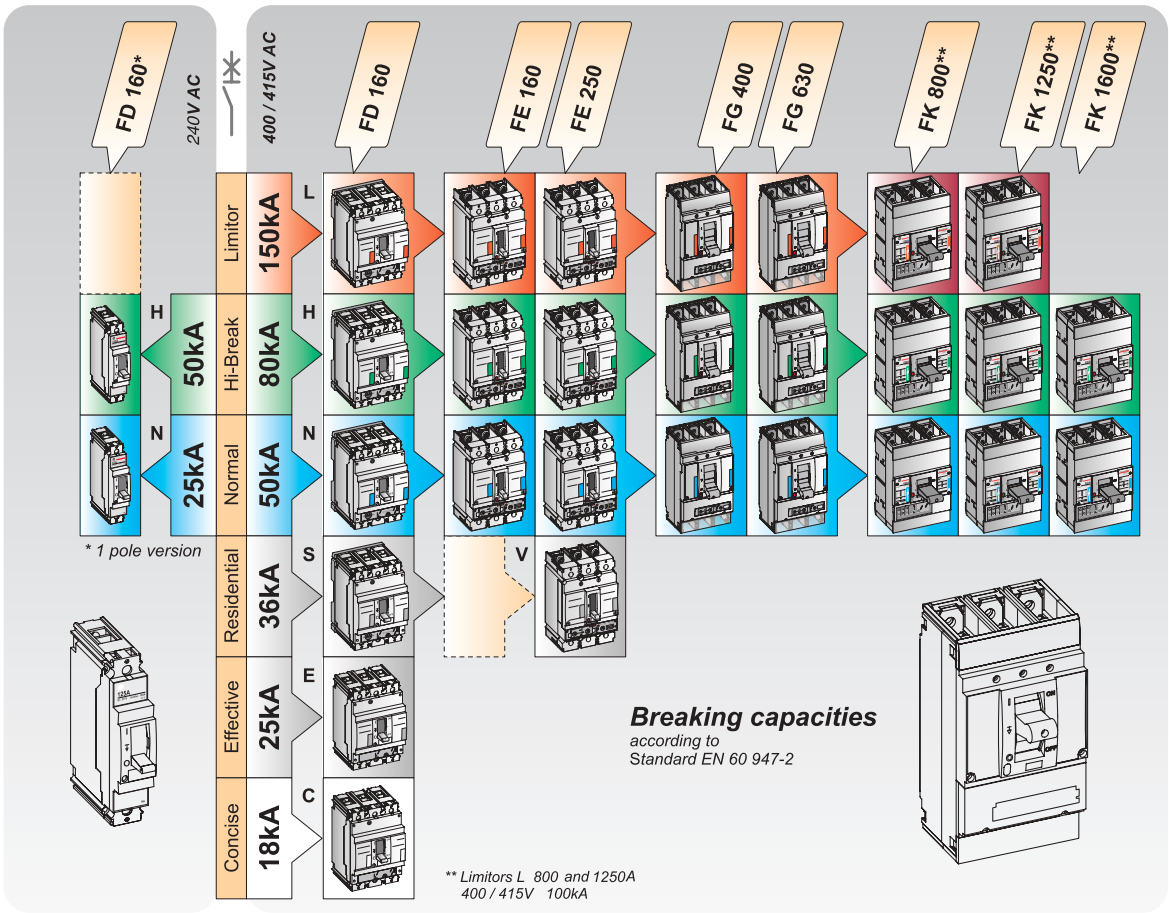

Moulded Case Circuit Breakers
designed for global applications

Contents

***A complete line of** selective & current limiting breakers*

***Protection with** flexible & interchangeable trip units*

***Common accessories** safe & easy to mount*

***Wide range of** electrical & mechanical operators*

***Versatile** installation options*

A full solution for low voltage distribution

Record Plus

The ***Record Plus™*** family of circuit breakers has been developed as a line of aesthetically and technically coordinated protection devices for low voltage distribution and control applications. The circuit breakers are available in four sizes, each of which is tailored to the individual requirements associated with its application.
The line offers a current range running from 3A to 1600A in single, 3 and 4 pole ratings. Numerous versions as fixed, plug-in and draw-out are available and the line is completed with a full range of accessories.

FD160

Rated at 160A, the FD160 frame size is designed for use in both a DIN-rail environment with modular equipment and in industrial applications. It is supplied with IPXXB terminals suitable for direct connection of one or two conductors totalling up to 95 mm^2 and is available as a thermal-magnetic breaker, a moulded case switch, and as a magnetic-only motor circuit protector.
The FD160 bridges the gap between residential miniature circuit breakers and industrial moulded case circuit breakers.

FE160 and FE250

Rated at 160 and 250A, the FE frame sizes are designed for side-by-side mounting with FD160 types in panels. FE sizes are equipped with an easily accessible busbar connection and can also be supplied with cable lugs for use with copper or aluminum conductors.
The design allows the use of interchangeable thermal-magnetic, magnetic-only, and electronic trip units.

A complete line of
selective & current limiting breakers

FG400 and FG 630
Rated at 400 and 630A, the FG frame size includes all of the advanced features of the FD and FE frame sizes.
The FG connection area features easy-to-access busbar connections. Cable lugs for use with single or multiple copper or aluminum conductors are optionally available. The breaker is designed for use with interchangeable electronic units that can be easily adapted to multiple levels of protection.

FK 800, 1250 and 1600
Rated at 800,1250 and 1600A, the FK frame sizes are designed for use with the FG400 and 630 frame sizes. The design uses electronic trips units available in a number of performance ranges and allowing a wide variety of setting options and groundfault protection. If needed thermal-magnetic and magnetic only trip units are also available.
The FK connection area features easy-to-access busbar connections or cable lugs for use with single or multiple copper or aluminum conductors.

Record Plus

Record Plus™ circuit breakers are designed to protect, isolate and switch circuits in low voltage distribution networks. Circuit protection is provided by a combination of the devices unique current limiting properties and integrated protection devices commonly referred to as trip units.

The trip units are designed to protect circuits and/or the equipment connected to these circuits and exist as electromechanical or electronic devices. Numerous electromechanical types are available as thermal magnetic devices with overload and short-circuit protection or magnetic-only types providing short-circuit protection. Electronic devices offering wide setting ranges and a more sophisticated level of protection are available in several versions. Each trip unit has a setting area finished with a sealable transparant trip unit door.

Electromechanical devices

Devices available in a current range of 16 to 1250A as single, two, three or four pole devices. The electromechanical trip units exist as thermal magnetic, magnetic-only and generator protection models. The high-performance thermal magnetic trip units exist as selective and non-selective versions and are equipped with a fault indicator that distinguishes between overload and short-circuit events in accordance with HD 384(1). This patented safety feature allows users to reduce downtime by resetting the breaker directly after an overload event.

Electronic devices SMR1

The ***Record Plus™*** FE, FG and FK sizes can be equipped with rigorously designed and tested interchangeable electronic trip units available in three and four pole units in currents ranging from 25 to 1600A.

The SMR1 and SMR2 types offer ajustable overload and selective short-circuit protection. The SMR1 range is designed for simplicity and includes numerous exciting features such as an overload signalling option, a built-in temperature sensor and rating plugs suitable for both line and motor protection.

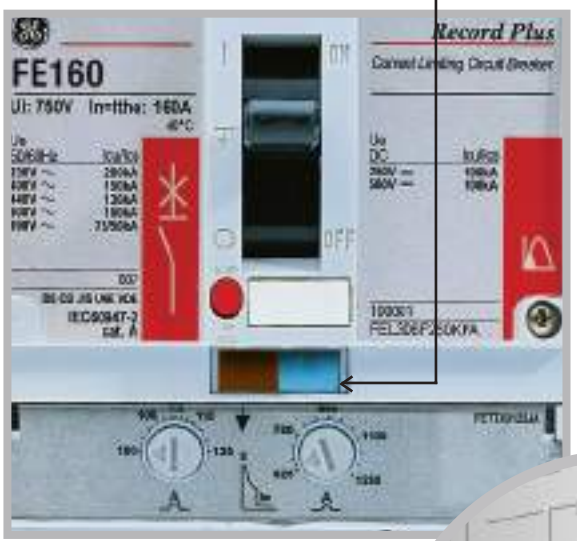

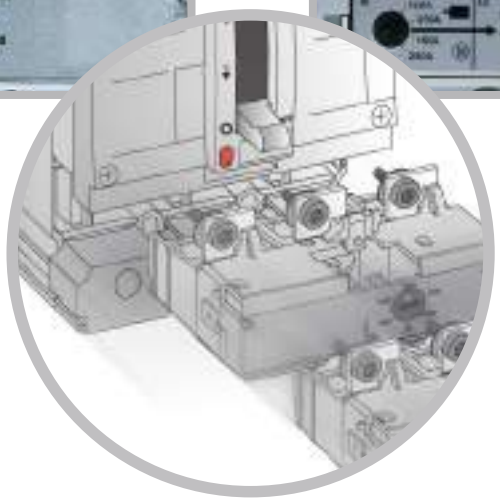

(1) Only applicable for the FE frame type.

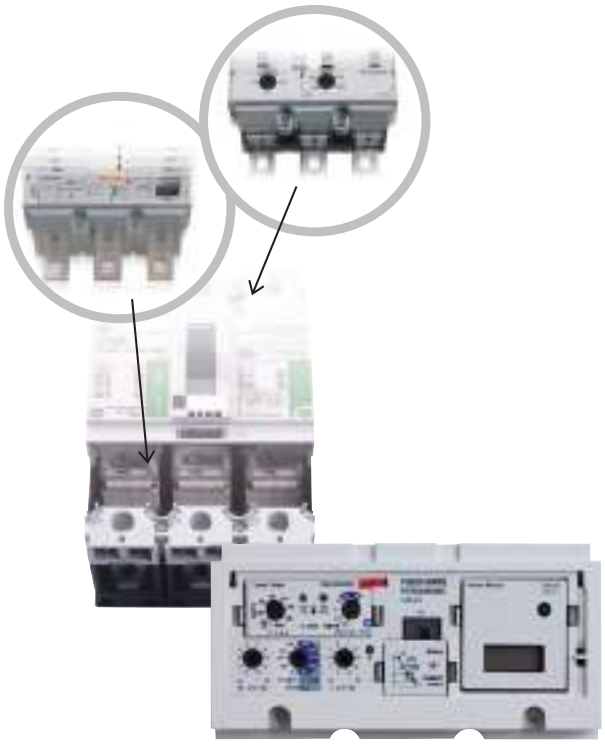

Protection with *flexible & interchangeable trip units*

Personnel protection

A line of three and four pole add-on residual current devices are available as side or bottom mounted units with ratings up to 630A and sensitivities of 30mA to 10A.
The devices slide on to the breaker easily and are fixed by simply tightening the main electrical connections. Designed to meet the latest standards, they each have a mechanical and electrical test option and share a common cut out.
A de-electric disconnect plug unit and setting areas with transparent, tamper-free cover are standard for the whole line.
For ratings above 630A, seperate sensors and relays are available, or an integrated ground fault protection can be used.

Electronic devices SMR2

Designed to provide a flexible solution for all protection scenarios the standard device provides an extensive set of protection features as:

- Long Time Protection adjustable from 0.4 to 1 x In.
- A choice of up to five Long Time Delay Bands.
- Short Time protection adjustable from 2 to 12 x In
- A choice of up to five Short Time Delay Bands with a set of optional I^2T bands.
- Instantaneous Short Circuit Protection adjustable from 2 to 13 x In.
- Zone selective interlock on ST and GF functions (When a GF module is added)
- A Battery that supplies the Thermal Mermory function.

An SMR2 can be equipped with unique Field mountable Plug-in modules that extend the Trip Units functionality to include:

- Modbus Communication
- Ground Fault Protection (GF)
- A two Channel Load Shedding Option.
- Trip Reason Indication module (LT, ST & I)
- Current measurement by Ammeter

An external Contact/Communication module allows the user to monitor the SMR2 via Modbus rtu communication or by using the available 1A relay contacts.

Common accessories
safe & easy to mount

Safe and easy to mount
The internal accessories are designed for safe and easy mounting. The breaker trips upon cover removal and remains tripped until the cover is replaced. Cover removal provides access to a specifically designed, isolated compartment into which the accessories can be mounted easily and safely in conveniently marked areas.
The advanced design includes routing channels for external wiring that allows access to internal terminals, making it easier to connect accessories. Particular attention has been paid to the design of these terminals that allow the connection of wiring from 0.5 to 2.5 mm^2.

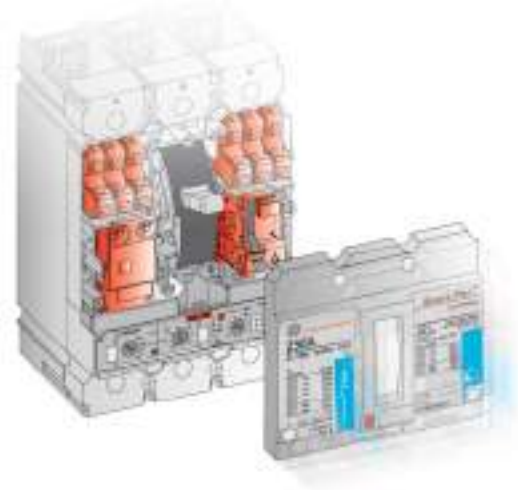

Common and adaptable
The same internal accessories are used in the FD, FE and FG frame sizes. The mounting system and wiring access methodology remains the same: simple and effective.
The FK frame has equivalent accessories and the same connection options.
For plug-in and draw-out breakers 6, 8 and 10 pole plug/socket combinations are available. These are equipped with wiring that can be led through specific openings in the breaker rear.

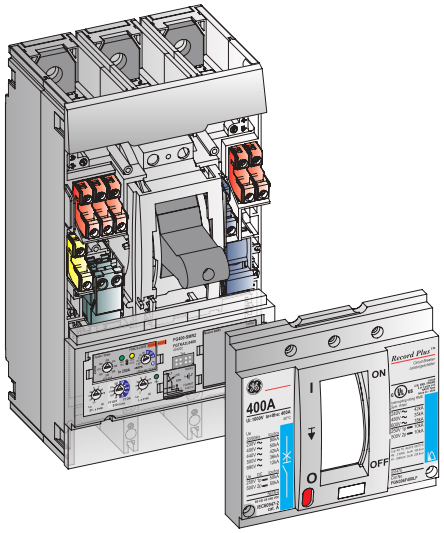

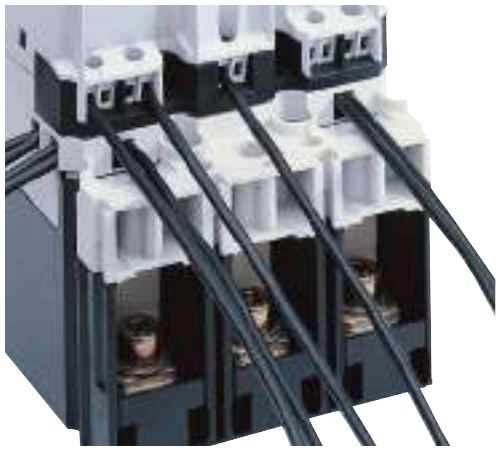

Mounting

Internal accessories can be easily clicked into conveniently marked areas in the isolated compartment.
Clearly marked indication of the accessory position and a mechanical interchange prevention system assure an error-proof and solid mounting of the accessory.

Wiring

External wiring is routed through the top or the side of the breaker lid through break out openings.
The wiring can then be connected to the accessory terminals. These cage terminals allow for cross sections from 0.75 to 2.5 mm^2 and even allow the connection of two wires.
All contact points are coded in accordance with the EN 60947 standard thus allowing for universal wiring diagrams.

Auxiliary and Bell Alarm contacts

The internal accessories are common to ***Record Plus™*** FD, FE and FG circuit breakers. They offer a unique, patented, auxiliary contact block with normally open and normally closed contacts which are suitable for use in high current and high fidelity applications. Selective Fault Indication is possible by using one or a a combination of the two Bell Alarm contact types.

Releases

The shunt and undervoltage releases are a totally new design combining the best in electromechanical and electronic engineering. Most releases are common for AC and DC voltages and are available in a wide voltage range. They combine low power consumption, a kiss-free, lock-out design and the ease of use common to all ***Record Plus™*** internal accessories.

Wide range of
electrical & mechanical operators

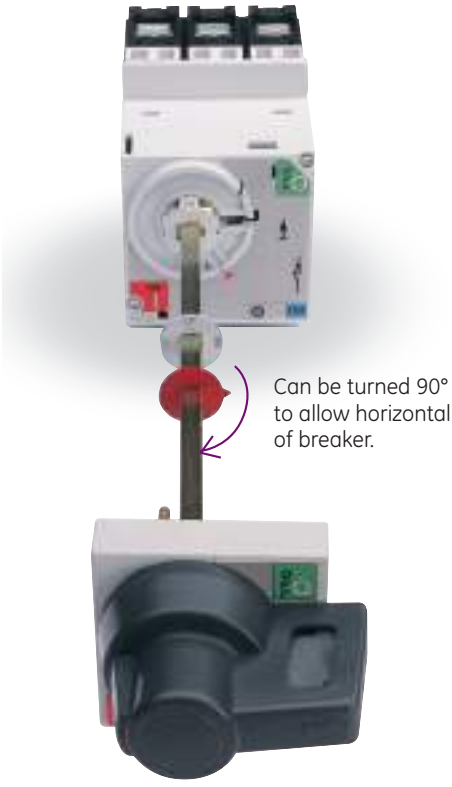

Can be turned 90°
to allow horizontal mounting
of breaker.

Easy-to-mount rotary handles

Fitted onto the breaker front the device allows the vertical handle movement to be changed into a rotary operation with the OFF position at 3 o'clock and the OFF position at 6 o'clock. An accurate position indication of the three breaker positions ON-OFF and TRIPPED is provided by a totally new internal design that also allows the user to install one or two early closing and late opening contact blocks which are the same as the standard internal accessory types.

Easy to install

The handles are available as a breaker mounted device, a type that can be mounted through a door or a panel and a version where the operator is mounted on the door or panel front.
The door and/or panel mounted units are equipped with (bypassable) interlocks to prevent the door from opening or the panel being removed whilst the breaker is ON. The door/panel mounted operators use a drilling common across the line.
Each breaker size and breaking capacity rating has its own escutcheon and handle that can be equipped with padlocks and/or a keylock.

Safe to operate

Locking/Interlocking devices

To allow users to safely work on the installations or installation segments protected by the ***Record Plus™*** moulded case circuit breakers it is possible to padlock the devices in their OFF position. A padlocking facility can be attached to the breaker front allowing the breaker to be equipped with up to three padlocks of 5 to 8 mm.

A second type (depicted in the photo) is only firmly attached to the breaker when it is padlocked and can be removed for use on another breaker when not in use. Key locking devices allow the creation of multiple key interlocking configurations. A walking beam system is available for interlocking two or three breakers. The system can be upgraded to a fully automatic power transfer system.

Easy to operate

Electrical operators

Front mounted devices that allow electrical operation of the breaker on which the device is mounted. The Record Plus line offers five different electrical operators each tailored to the characteristics of a specific frame size. Four of the these devices (one for each frame size) can be mounted in the field. An aditional Hi speed factory fitted operator is available for the FK frame size.

Common to each of these devices is that they can be used in a simple 3 wire connection scheme that can be extended to include a more complex functionality.

All Electrical Operators have a user interface that includes a CLEAR and ACCURATE ON, OFF and TRIPPED indication and offer the option to operate locally (Manual) or remotely (Auto).

All devices can be padocked or keylocked in OFF position.

Easy connection is achieved by locating the terminals in the immediate vicinity of those of the internal acces-sories and by using terminals with a connection capacity of 0.5 to 2.5 mm^2.

Versatile installation options

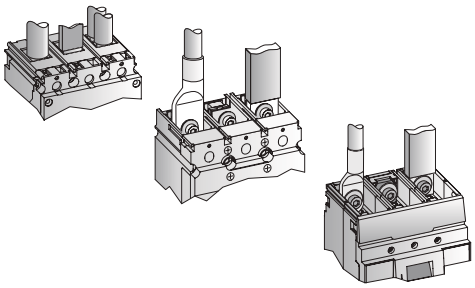

Standard connection options

The breakers are equipped with front access terminals designed to allow the user to quickly and easily connect standard conductors. The FD160 frame has box clamps suited for one or two cable cores or busbars while the FE, FG and FK frame sizes are configured to allow for easy busbar connection.

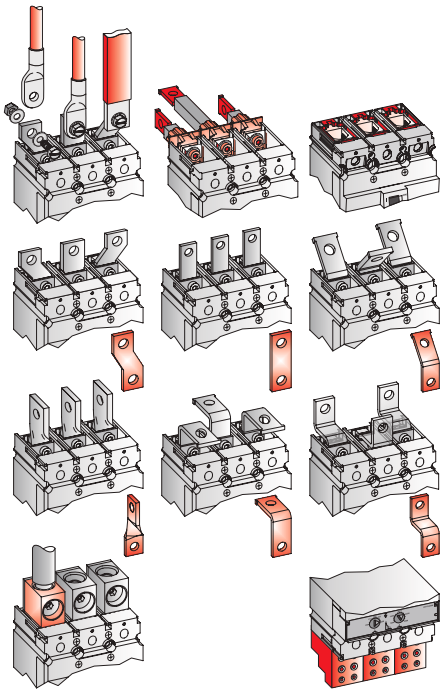

Configurable connection options

A wide range of alternatives are available in kit form with rear and angular connectors, spreaders, customised ring terminal connectors and extenders. Single and multiple box clamps can be directly fitted to the breaker terminals or in combination with extenders and spreaders. This flexibility allows the user to adapt ***Record Plus™*** circuit breakers to almost all standard connection configurations while at the same time allowing for the use of over-dimensioned and/or multiple conductors.

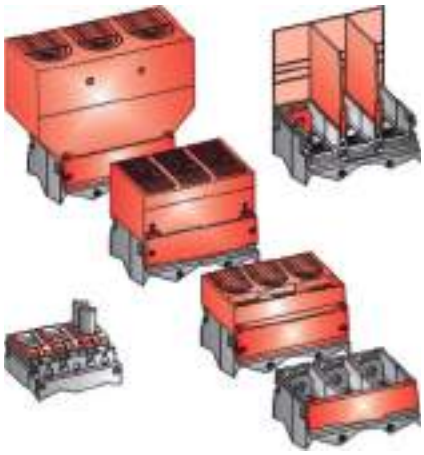

Terminal shields

Each breaker can be fitted with tamper resistant, short or long, terminal shields that allow a IP30 finishing of the product. Backplates and phase separators complete this line and consistently enable the user to connect the products safely. Additionally, frame specific accessories as the IPXXB terminal cover for the FD160 and the widened and elongated terminal shield for the FG frame are available.

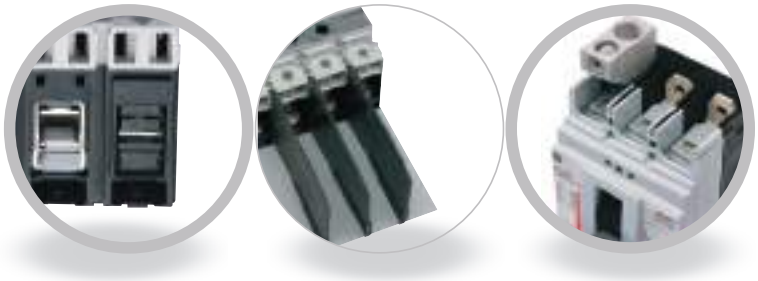

Plug-in systems

Plug-in mounting systems are available for current ratings through 630A in both kit and assembled options. The plug-in system consists of a single-piece moulded base in an IPXXB configuration. The mounting system features a safety interlock which ensures that the breaker is mechanically tripped before it is fully withdrawn or re-inserted in the ON position.

An optional set of plug-in terminal block(s) are available for use with internal accessory connections. Plug-in mounting bases are normally supplied with exactly the same front access terminal configuration as the standard fixed breaker. This allows the use of the same wide range of connection accessories that are available in kit form on the fixed version. These include rear and angular connectors, spreaders, customised ring terminal connectors and extenders. Internal accessories can be easily clicked into conveniently marked areas in the isolated compartment. Clearly marked indication of the accessory position and a mechanical interchange prevention system assures an error-proof and solid mounting of the accessory.

Draw-out system

A simple, hand operated draw-out system is available for the FE, FG and FK frame sizes. The draw-out system enables ***Record Plus™*** breakers with rating from 3A to 1600A to be configured as devices that can be fully insulated from the power supply and installation. Each device has three positions inserted and connected. Test and isolated, and withdrawn.

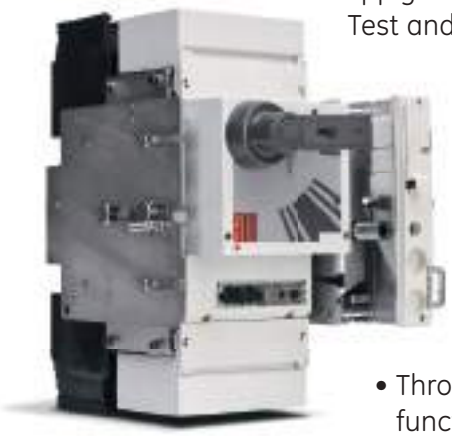

A design modelled on our ACB constructions and incorperating a standard plug-in base encapsulated it in a sturdy metal cradle. The devices have a protection degree of IP40 in withdrawn or inserted position and offer a major step forward in MCCB draw-out construction.

A system offering a host of features as:

- Use behind door.
- Trip functionality on insertion and withdrawal.
- With MCCB style test position.
- Easily accessible earthing point.
- Through door version allowing accessibility of all draw-out and/or breaker functions from the door front.
- A locking option for multiple padlocks and/or multiple key locks.
- Multiple carriage indication switches for each position.
- Optional ACB style TEST position.

Connectivity

The installation of a breaker is much easier and more cost effective when the mounting and connecting of the breaker can be reduced to a few simple, automateable tasks. Based on these principles GE have devised a unique system that allows the user to mount and connect the breaker before installation.

An adaptor plate, specifically designed for the ***Record Plus™*** breaker line and incorporating all the connection hardware, is fitted to the breaker using 5 to 6 simple screws. Once mounted the adaptor is then simply plugged onto a three or four pole busbar system already installed in the equipment.

Record Plus

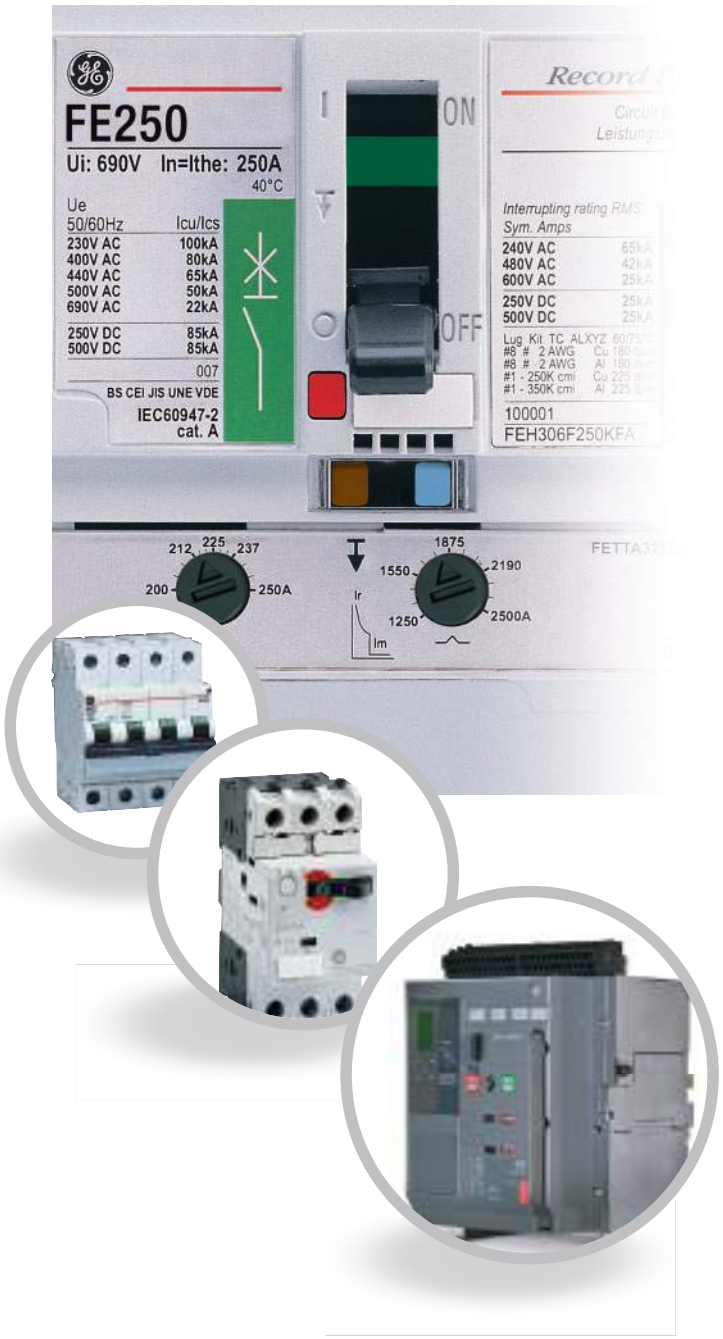

Using world class design and development tools like Six Sigma, Computer Simulation and Lean Manufacturing, ***Record Plus™*** is intended to meet and exceed the most stringent quality and safety standards. At GE we are proud to offer a product that will offer years of reliable and dependable protection.

GE's name is synonymous with a broad range of products designed to meet our customer's changing and competitive environment. Our drive to exceed our customer's expectations is the foundation for continual renewal of our commitment to provide innovative low voltage solutions.

The ***Record Plus™*** MCCB, Elfa Plus MCB, Surion Breaker and Motor starter line and the new EntelliGuard™ G Power Circuit Breaker lines combine to offer a full line of hi-performance protection devices. They Provide a Fully co-ordinated approach to circuit and device protection for use in the Domestic, Commercial and Industrial environment.

GE's new lines meet the latest technical standards and regulations and have been certified by authorities as Lovag, the KEMA and Lloyd's. The components in these lines have been designed to be an integral part of a solution. A complete low voltage distribution and control range including components, accessories and the distribution and controls equipment they go into.

Full solution for
low voltage distribution

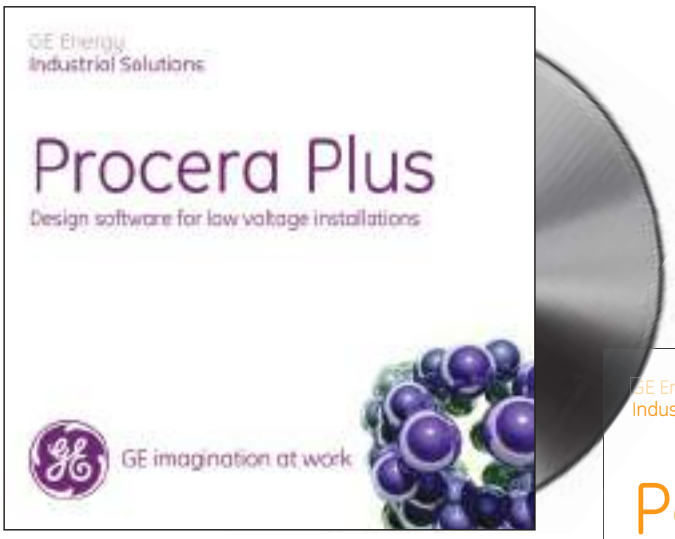

Application Software

The new HD 384 and R064-03 standards require that the design of a low voltage distribution system includes the determination of all perspective short-circuit and fault currents levels. GE has developed a windows based software package to do this:
Procera Plus offers a multi standard and multi lingual software package to accompany our new product line.

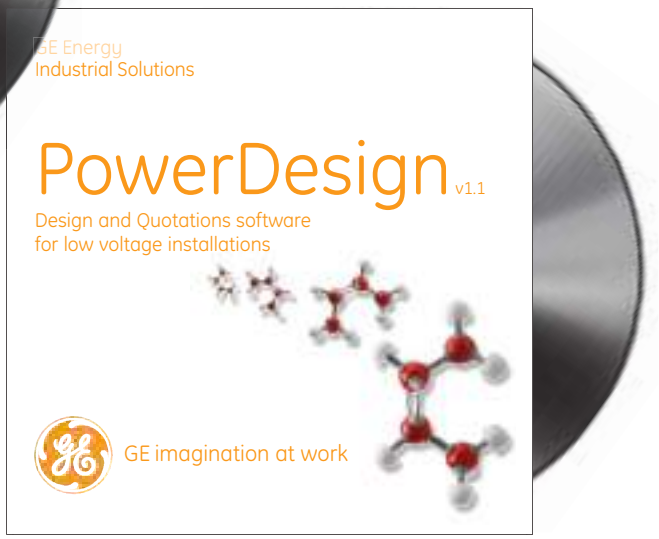

Implementation Software

Two ranges of software are designed to allow a user to select the correct protection devices, the associated components needed to install it, and a distribution system in which they can be installed.
The software **PowerDesign** can be linked with Procera Plus and automatically produces drawings and ordering details.

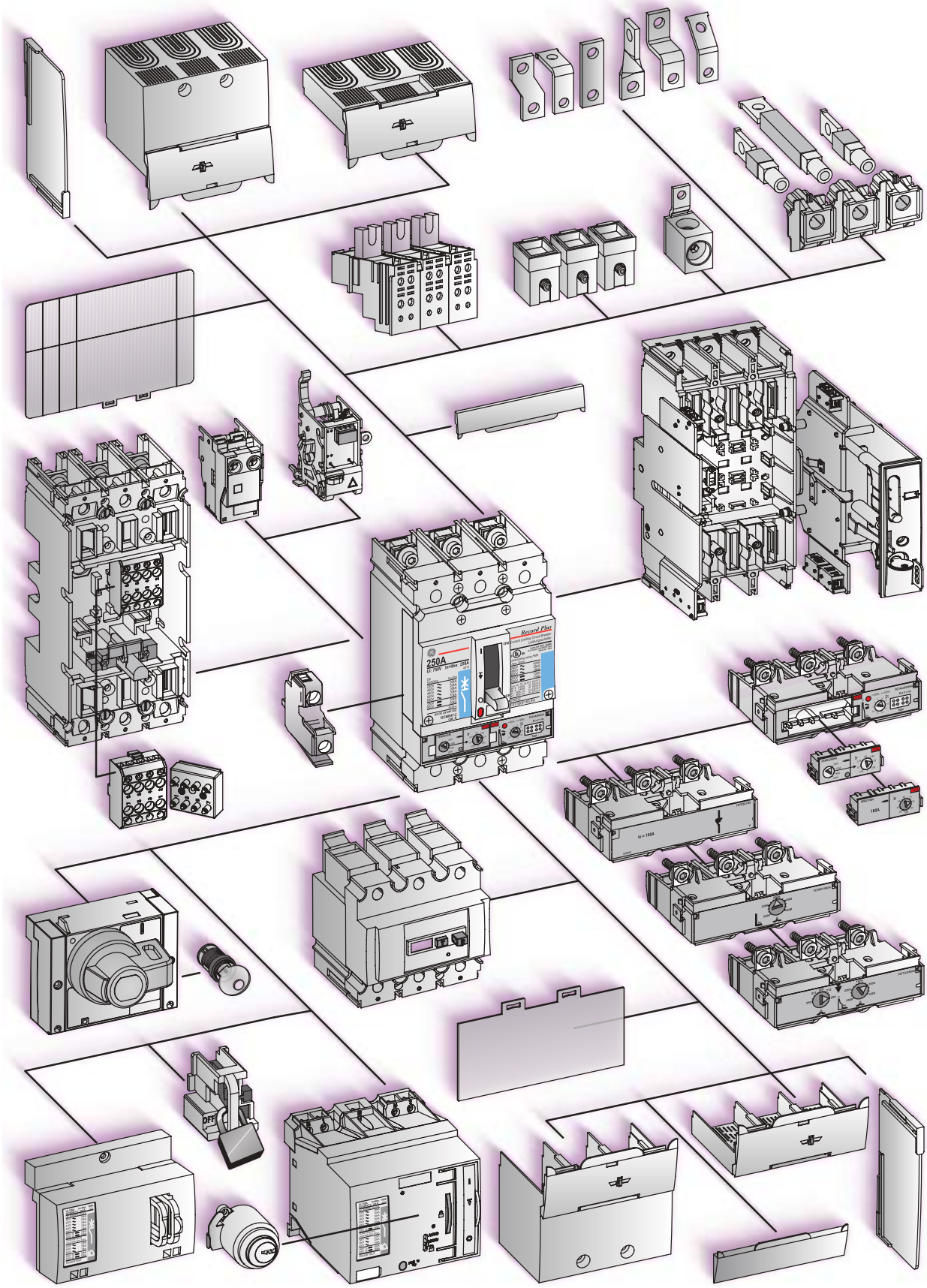
Record Plus
250A

A.2 **How to order a standard breaker**
A.4 **FD frame**
A.5 Complete circuit breakers FD160
A.9 Accessories
A.12 **FE frame**
A.13 Complete circuit breakers FE160 & FE250
A.19 Accessories

A.24 **FG frame**
A.25 Complete circuit breakers FG400 & FG630
A.30 Accessories
A.34 **FK frame**
A.35 Complete circuit breakers FK800, FK1250 & FK1600
A.38 Accessories
A.42 **Connectivity**, 60mm busbar system
A.44 Interlocking Breakers
A.46 Residual Current Devices with separate sensor
A.48 Circuit Breaker in Components FE160 & FE250
A.50 Circuit Breaker in Components FG400 & FG630

How to order a standard breaker

To determine the basic breaker, the required current rating, the short circuit breaking capacity and the number of switched and protected poles must be defined. This information can be found on page 2 and 3 of this catalogue and is repeated in short-form within the ordering code part of each breaker size.

After selecting the basic device the circuit protection element or trip unit needs to be defined. Numerous different types are available, each briefly described in the ordering code section of each breaker size.
A full functional description is included in section B of this catalogue.

With the above mentioned information the correct code for the required moulded case circuit breaker can be found in the order code pages. Here the selected product is a version suited for fixed mounting and front access connection.

Internal accessories
Common internal acessories are available for the FD160, FE160, FE250, FG400 and FG630 frame sizes. Taking the maximum breaker content into account as indicated in section E the procedure just requires a correct code selection.
The FK800, 1250 and 1600 types have equivalent accesories.

Operators
The breakers are normally supplied with an elongated toggle operator. Other operators, as rotary handles and electrical operators, can be ordered seperately.

Residual Current devices (RCD)
Available as add-on devices for side mounting (FD160) or mounting below the trip unit area of the breaker (FD160, FE160, FE250, FG400 and FG630 frame sizes). For breakers large than 630A seperate RCD relays and sensors are available.
Alternatively the FG400, FG630, FK800, FK1250 and FK1600 types can be equipped with a fully integrated Ground Fault protection device.

Breakers in Plug-in or Draw-out version
A breaker in fixed rating can easily be converted to a breaker in plug-in or draw-out rating. The plug-in device is supplied in two parts, one set for mounting on the breaker and one multipole base. The draw-out unit is ordered as one complete conversion kit for the required breaker. On ordering plug-in or draw-out breakers with accessories, please take into account that the auxiliary wiring also needs to be executed as such (6, 8 or 10 pole socket system required).

Connection options
If the standard connection options do not meet the requirements a wide variety of others is available.
The connection options are supplied in kit form for mounting on one side (load or line) of a breaker and can be used for the fixed, plug-in or draw-out version of the breaker.

Installation accessories
Additional requirements, as to the protection degree of the connection area, the locking or padlocking of the breaker and finishing of cut-outs for operators can be met by the use of these parts.

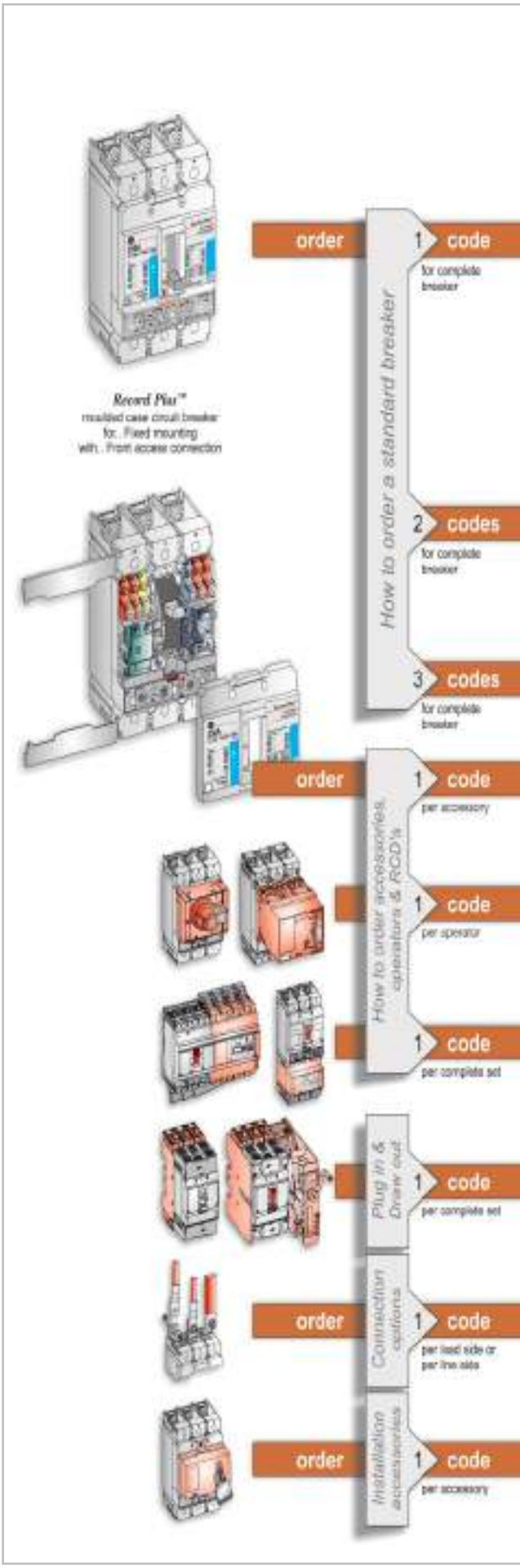

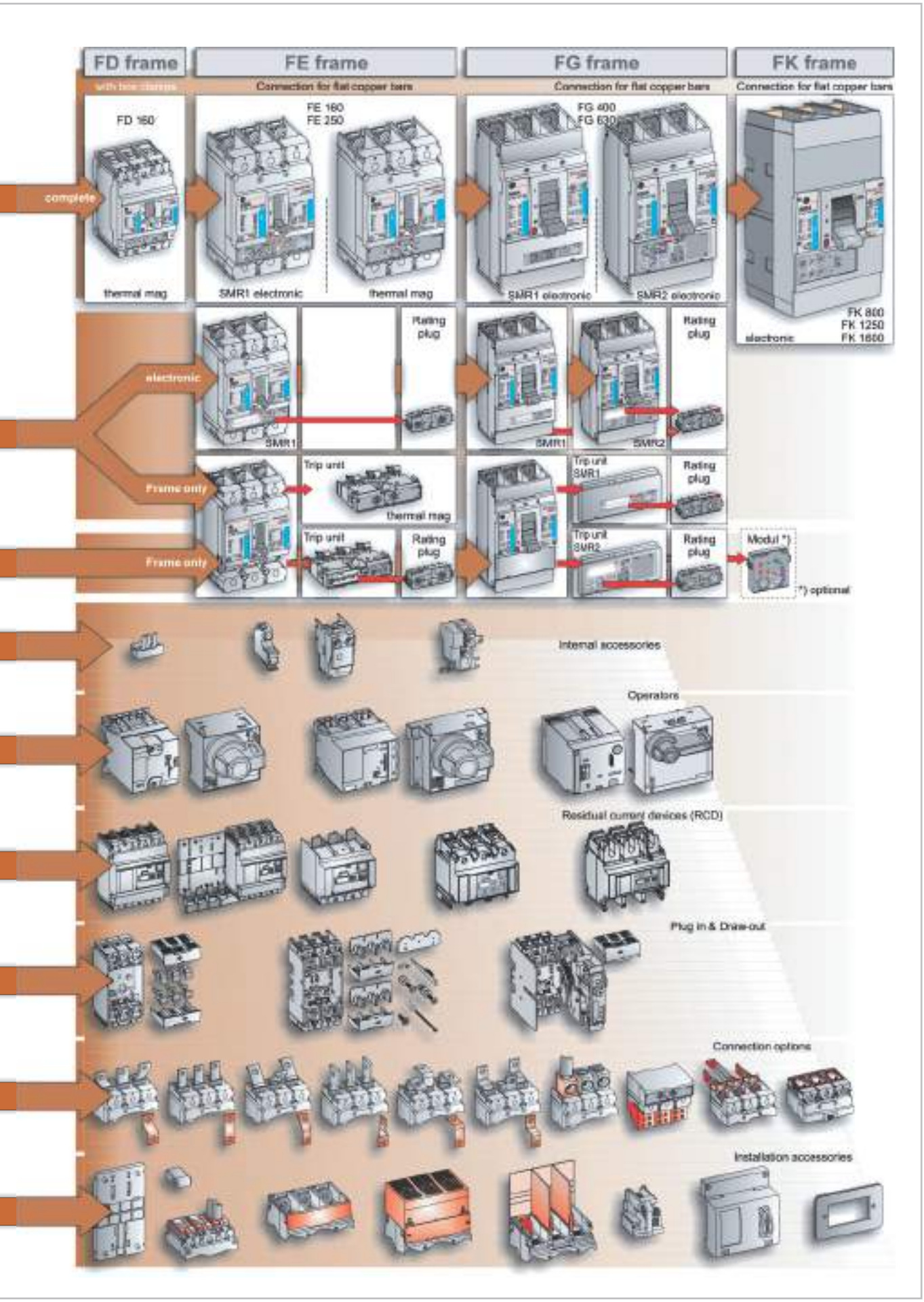
FD frame
FE frame
FG frame
FK frame
Connection for flat copper bars
Connection for flat copper bars
Connection for flat copper bars
FD 160
FE 160
FE 250
FG 400
FG 630
complete
thermal mag
SMR1 electronic
thermal mag
SMR1 electronic
SMR2 electronic
FK 800
FK 1250
FK 1600
electronic
Rating plug
electronic
SMR1
Rating plug
SMR1
SMR2
Rating plug
Trip unit
Frame only
thermal mag
Trip unit SMR1
Rating plug
Trip unit
Rating plug
Frame only
Trip unit SMR2
Rating plug
Modul *)
*) optional
Internal accessories
Operators
Residual current devices (RCD)
Plug in & Draw-out
Connection options
Installation accessories

LTM
Line thermal magnetic protection
LTMD
Selective thermal magnetic protection
GTM
Generator thermal magnetic protection
Mag Break™
Magnetic Only protection
Y
Non Automatic or switch (not mentioned in tables)

FD frame

Breaking capacities

2, 3 and 4 pole types

Icu 400/415V AC in kA eff.

Type	C	E	S	N	H	L
FD160	18	25	36	50	80	150

Single pole types

Icu 230/240V AC in kA eff.

N	H
25	50

Protection

Trip Unit	Rated Current (A)	LTM	LTMD	GTM	Mag Break™
FD160 (2,3 & 4 pole)	3	-	-	-	N,H
	7	-	-	-	N,H
	12.5	-	-	-	N,H
	16	C,E	S,N,H	-	-
	20	C,E	S,N,H	-	N,H,L
	25	C,E	S,N,H,L	N,H	-
	30	-	-	-	N,H,L
	32	C,E	S,N,H,L	N,H	-
	40	C,E	S,N,H,L	N,H	-
	50	C,E	S,N,H,L	N,H	N,H,L
	63	C,E	S,N,H,L	N,H	-
	80	C,E	S,N,H,L	N,H	N,H,L
	100	C,E	S,N,H,L	N,H	N,H,L
	125	C,E	S,N,H,L	N,H	-
	160	C,E	S,N,H,L	N,H	-

Number of poles/ protected poles (trips)				
2 pole 2 trips	-	N	-	-
3 pole 3 trips	C,E	S,N,H,L	N,H	N,H,L
4 pole 3 trips	-	N,H,L	N,H	N,H,L
4 pole 4 trips	C,E	S,N,H,L	N,H	-
	-	-	-	-
4 pole 3.5 trips (N=50%)[2]	-	N,H,L	N,H	-

Trip Unit	Rated Current (A)	LTM
FD160 (1 pole)	-	-
	-	-
	-	-
	16	N,H
	20	N,H
	25	N,H
	-	-
	32	N,H
	40	N,H
	50	N,H
	63	N,H
	80	N,H
	100	N,H
	125	N,H
	160	N,H

Number of poles/ protected poles (trips)	
1 pole 1 trip	N,H

Accessories

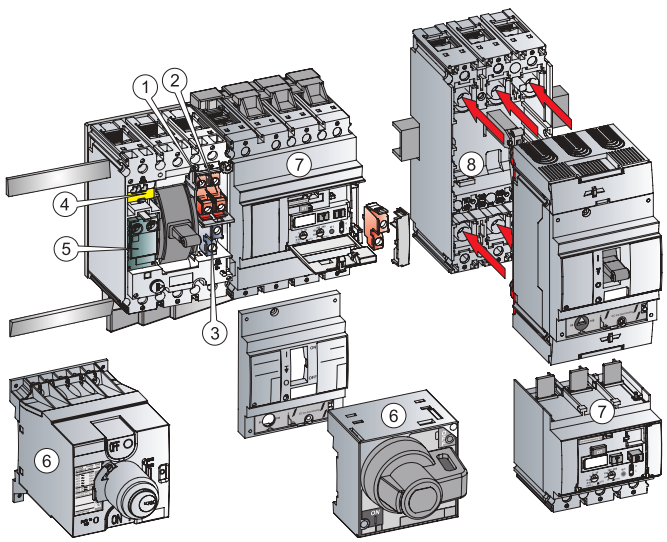

① Auxiliary contact left mounted (NO or NC)
② Auxiliary contact right mounted (NO or NC)
③ Bell Alarm trip unit (NO or NC)
④ Bell Alarm mechanism (CO)[1]
⑤ Shunt or Undervoltage release
⑥ Operators
Rotary Handle
Electrical Operator
⑦ RCD, side or bottom mounted[1] (Insert indicates Bell alarm contact mounting)
⑧ Plug-in system

(1) Not applicable for some FDC and FDE types.

FD160 - Complete circuit breaker

Line Thermal Magnetic LTM (fixed settings calibrated at 40°C)

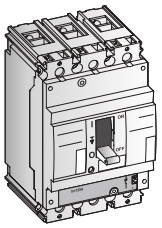

18 kA FDC

In (A)	3 pole 3 trips Cat. no.	Ref. no.	4 pole 4 trips[1] Cat. no.	Ref. no.
16	FDC35TF016EF	**433532**	FDC45TF016EF	**433926**
20	FDC35TF020EF	**433553**	FDC45TF020EF	**433928**
25	FDC35TF025EF	**433864**	FDC45TF025EF	**433930**
32	FDC35TF032EF	**433867**	FDC45TF032EF	**433932**
40	FDC35TF040EF	**433870**	FDC45TF040EF	**433934**
50	FDC35TF050EF	**433873**	FDC45TF050EF	**433936**
63	FDC35TF063EF	**433876**	FDC45TF063EF	**433938**
80	FDC35TF080GF	**433879**	FDC45TF080GF	**433940**
100	FDC35TF100GF	**433882**	FDC45TF100GF	**433942**
125	FDC35TF125GF	**433885**	FDC45TF125GF	**433944**
160	FDC35TF160GF	**433899**	FDC45TF160GF	**433946**

One code covers: A standard, fixed front connection breaker with fixation hardware.
RCD device and bell alarm mechanism cannot be fitted.

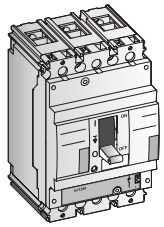

25kA FDE

In (A)	3 pole 3 trips Cat. no.	Ref. no.	4 pole 4 trips[1] Cat. no.	Ref. no.
16	FDE36TF016EF	**435127**	FDE46TF016EF	**435207**
20	FDE36TF020EF	**435129**	FDE46TF020EF	**435229**
25	FDE36TF025EF	**435130**	FDE46TF025EF	**435231**
32	FDE36TF032EF	**435132**	FDE46TF032EF	**435238**
40	FDE36TF040EF	**435135**	FDE46TF040EF	**435240**
50	FDE36TF050EF	**435138**	FDE46TF050EF	**435242**
63	FDE36TF063EF	**435145**	FDE46TF063EF	**435244**
80	FDE36TF080GF	**435147**	FDE46TF080GF	**435246**
100	FDE36TF100GF	**435193**	FDE46TF100GF	**435248**
125	FDE36TF125GF	**435195**	FDE46TF125GF	**435256**
160	FDE36TF160GF	**435205**	FDE46TF160GF	**435258**

One code covers: A standard, fixed front connection breaker with fixation hardware.
RCD device and bell alarm mechanism cannot be fitted.

Line Thermal Magnetic LTM (adjustable thermals calibrated at 40°C)

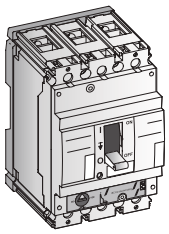

18 kA FDC

In (A)	3 pole 3 trips Cat. no.	Ref. no.	4 pole 4 trips[1] Cat. no.	Ref. no.
16	FDC35TE016ED	**433907**	FDC45TE016ED	**433948**
20	FDC35TE020ED	**433911**	FDC45TE020ED	**433949**
25	FDC35TE025ED	**433914**	FDC45TE025ED	**433950**
32	FDC35TE032ED	**433918**	FDC45TE032ED	**433951**
40	FDC35TE040ED	**436117**	FDC45TE040ED	**433952**
50	FDC35TE050ED	**436118**	FDC45TE050ED	**433953**
63	FDC35TE063ED	**436133**	FDC45TE063ED	**433954**
80	FDC35TE080GD	**436143**	FDC45TE080GD	**436145**
100	FDC35TE100GD	**436144**	FDC45TE100GD	**436146**
125	FDC35TE125GD	**433924**	FDC45TE125GD	**436147**
160	FDC35TE160GD	**433925**	FDC45TE160GD	**436148**

One code covers: A standard, fixed front connection breaker with:
DIN-Rail mounting kit + Breaker finishing covers + Fixation hardware.

25kA FDE

In (A)	3 pole 3 trips Cat. no.	Ref. no.	4 pole 4 trips[1] Cat. no.	Ref. no.
16	FDE36TC016EF	**430001**	FDE46TC016EF	**430008**
20	FDE36TC020EF	**430002**	FDE46TC020EF	**430009**
25	FDE36TC025EF	**430003**	FDE46TC025EF	**430010**
32	FDE36TC032EF	**430004**	FDE46TC032EF	**430011**
40	FDE36TC040EF	**430005**	FDE46TC040EF	**430012**
50	FDE36TC050EF	**430006**	FDE46TC050EF	**430013**
63	FDE36TC063EF	**430007**	FDE46TC063EF	**430014**
80	FDE36TC080GF	**430276**	FDE46TC080GF	**430299**
100	FDE36TC100GF	**430279**	FDE46TC100GF	**430302**
125	FDE36TC125GF	**430282**	FDE46TC125GF	**430305**
160	FDE36TC160GF	**433566**	FDE46TC160GF	**433569**

One code covers: A standard, fixed front connection breaker with fixation hardware.

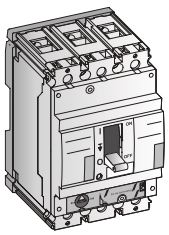

25kA FDE

In (A)	3 pole 3 trips Cat. no.	Ref. no.	4 pole 4 trips[1] Cat. no.	Ref. no.
16	FDE36TE016ED	**433649**	FDE46TE016ED	**433697**
20	FDE36TE020ED	**433651**	FDE46TE020ED	**433699**
25	FDE36TE025ED	**433653**	FDE46TE025ED	**433701**
32	FDE36TE032ED	**433655**	FDE46TE032ED	**433703**
40	FDE36TE040ED	**433657**	FDE46TE040ED	**433705**
50	FDE36TE050ED	**433659**	FDE46TE050ED	**433707**
63	FDE36TE063ED	**433661**	FDE46TE063ED	**433709**
80	FDE36TE080GD	**433663**	FDE46TE080GD	**433711**
100	FDE36TE100GD	**433665**	FDE46TE100GD	**433713**
125	FDE36TE125GD	**433667**	FDE46TE125GD	**433715**
160	FDE36TE160GD	**433669**	FDE46TE160GD	**433717**

One code covers: A standard, fixed front connection breaker with:
DIN-Rail mounting kit + Breaker finishing covers + Fixation hardware.

(1) Neutral on the left. If neutral on the right is needed, please contact us.

FD160 - Complete circuit breaker

Selective Thermal Magnetic LTMD (Settable thermals calibrated at 40°C)

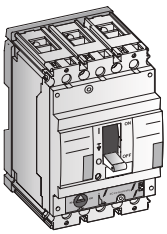

	In (A)	3 pole 3 trips Cat. no.	3 pole 3 trips Ref. no.	4 pole 4 trips[1] Cat. no.	4 pole 4 trips[1] Ref. no.	Cat. no.	Ref. no.	Cat. no.	Ref. no.
36 kA FDS	16	FDS36TD016ED	430161	FDS46TD016ED	430224				
	20	FDS36TD020ED	430163	FDS46TD020ED	430226				
	25	FDS36TD025ED	430165	FDS46TD025ED	430228				
	32	FDS36TD032ED	430167	FDS46TD032ED	430230				
	40	FDS36TD040ED	430169	FDS46TD040ED	430232				
	50	FDS36TD050ED	430178	FDS46TD050ED	430241				
	63	FDS36TD063ED	432952	FDS46TD063ED	432964				
	80	FDS36TD080GD	432955	FDS46TD080GD	432967				
	100	FDS36TD100GD	432958	FDS46TD100GD	432970				
	125	FDS36TD125GD	432961	FDS46TD125GD	432973				
	160	FDS36TD160GD	433602	FDS46TD160GD	433604				

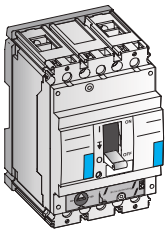

	In (A)	2 pole 2 trips Cat. no.	2 pole 2 trips Ref. no.
50kA FDN	16	FDN66TD016ED	430143
	20	FDN66TD020ED	430144
	25	FDN66TD025ED	430145
	32	FDN66TD032ED	430146
	40	FDN66TD040ED	430147
	50	FDN66TD050ED	430148
	63	FDN66TD063ED	430149
	80	FDN66TD080GD	430794
	100	FDN66TD100GD	430797
	125	FDN66TD125GD	430800
	160	FDN66TD160GD	433599

One code covers: A standard fixed front connection breaker + DIN-Rail mounting kit + Toggle elongator + Breaker finishing covers + Fixation hardware

Line Thermal Magnetic LTM (fixed settings calibrated at 40°C)

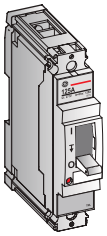

	In (A)	1 pole 1 trip[2] Cat. no.	1 pole 1 trip[2] Ref. no.		1 pole 1 trip[2] Cat. no.	1 pole 1 trip[2] Ref. no.
240V 25kA FDN	16	FDN13TF016EF	433316	240V 50kA FDH	FDH13TF016EF	433246
	20	FDN13TF020EF	433322		FDH13TF020EF	433255
	25	FDN13TF025EF	433328		FDH13TF025EF	433262
	32	FDN13TF032EF	433334		FDH13TF032EF	433268
	40	FDN13TF040EF	433340		FDH13TF040EF	433274
	50	FDN13TF050EF	433346		FDH13TF050EF	433280
	63	FDN13TF063EF	433352		FDH13TF063EF	433286
	80	FDN13TF080GF	433519		FDH13TF080GF	433292
	100	FDN13TF100GF	433522		FDH13TF100GF	433298
	125	FDN13TF125GF	433525		FDH13TF125GF	433304
	160	FDN13TF160GF	433527		FDH13TF160GF	433310

Selective Thermal Magnetic LTMD (Settable thermals calibrated at 40°C)

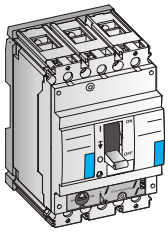

	In (A)	3 pole 3 trips Cat. no.	3 pole 3 trips Ref. no.	4 pole 3 trips[1] Cat. no.	4 pole 3 trips[1] Ref. no.	4 pole 4 trips[1] Cat. no.	4 pole 4 trips[1] Ref. no.	4 pole 3.5 trips (N=50%)[1] Cat. no.	4 pole 3.5 trips (N=50%)[1] Ref. no.
50kA FDN	16	FDN36TD016ED	430100	FDN436TD016ED	430117	FDN46TD016ED	430131	-	-
	20	FDN36TD020ED	430101	FDN436TD020ED	430118	FDN46TD020ED	430132	-	-
	25	FDN36TD025ED	430102	FDN436TD025ED	430119	FDN46TD025ED	430133	-	-
	32	FDN36TD032ED	430103	FDN436TD032ED	430120	FDN46TD032ED	430134	-	-
	40	FDN36TD040ED	430104	FDN436TD040ED	430121	FDN46TD040ED	430135	-	-
	50	FDN36TD050ED	430105	FDN436TD050ED	430122	FDN46TD050ED	430136	-	-
	63	FDN36TD063ED	430106	FDN436TD063ED	430123	FDN46TD063ED	430137	FDN456TD063ED	430129
	80	FDN36TD080GD	430630	FDN436TD080GD	430688	FDN46TD080GD	430752	FDN456TD080GD	430718
	100	FDN36TD100GD	430633	FDN436TD100GD	430691	FDN46TD100GD	430755	FDN456TD100GD	430721
	125	FDN36TD125GD	430636	FDN436TD125GD	430694	FDN46TD125GD	430758	FDN456TD125GD	430724
	160	FDN36TD160GD	433572	FDN436TD160GD	433578	FDN46TD160GD	433590	FDN456TD160GD	433584

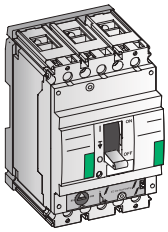

	In (A)	3 pole 3 trips Cat. no.	3 pole 3 trips Ref. no.	4 pole 3 trips[1] Cat. no.	4 pole 3 trips[1] Ref. no.	4 pole 4 trips[1] Cat. no.	4 pole 4 trips[1] Ref. no.	4 pole 3.5 trips (N=50%)[1] Cat. no.	4 pole 3.5 trips (N=50%)[1] Ref. no.
80kA FDH	16	FDH36TD016ED	430020	FDH436TD016ED	430037	FDH46TD016ED	430051	-	-
	20	FDH36TD020ED	430021	FDH436TD020ED	430038	FDH46TD020ED	430052	-	-
	25	FDH36TD025ED	430022	FDH436TD025ED	430039	FDH46TD025ED	430053	-	-
	32	FDH36TD032ED	430023	FDH436TD032ED	430040	FDH46TD032ED	430054	-	-
	40	FDH36TD040ED	430024	FDH436TD040ED	430041	FDH46TD040ED	430055	-	-
	50	FDH36TD050ED	430025	FDH436TD050ED	430042	FDH46TD050ED	430056	-	-
	63	FDH36TD063ED	430026	FDH436TD063ED	430043	FDH46TD063ED	430057	FDH456TD063ED	430049
	80	FDH36TD080GD	430338	FDH436TD080GD	430396	FDH46TD080GD	430460	FDH456TD080GD	430426
	100	FDH36TD100GD	430341	FDH436TD100GD	430399	FDH46TD100GD	430463	FDH456TD100GD	430429
	125	FDH36TD125GD	430344	FDH436TD125GD	430402	FDH46TD125GD	430466	FDH456TD125GD	430432
	160	FDH36TD160GD	435821	FDH436TD160GD	435827	FDH46TD160GD	435839	FDH456TD160GD	435833

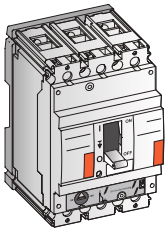

	In (A)	3 pole 3 trips Cat. no.	3 pole 3 trips Ref. no.	4 pole 3 trips[1] Cat. no.	4 pole 3 trips[1] Ref. no.	4 pole 4 trips[1] Cat. no.	4 pole 4 trips[1] Ref. no.	4 pole 3.5 trips (N=50%)[1] Cat. no.	4 pole 3.5 trips (N=50%)[1] Ref. no.
150kA FDL	25	FDL36TD025ED	430070	FDL436TD025ED	430082	FDL46TD025ED	430090	-	-
	32	FDL36TD032ED	430071	FDL436TD032ED	430083	FDL46TD032ED	430091	-	-
	40	FDL36TD040ED	430072	FDL436TD040ED	430084	FDL46TD040ED	430092	-	-
	50	FDL36TD050ED	430073	FDL436TD050ED	430085	FDL46TD050ED	430093	-	-
	63	FDL36TD063ED	430074	FDL436TD063ED	430086	FDL46TD063ED	430094	FDL456TD063ED	430087
	80	FDL36TD080GD	430518	FDL436TD080GD	430557	FDL46TD080GD	430591	FDL456TD080GD	430568
	100	FDL36TD100GD	430521	FDL436TD100GD	430560	FDL46TD100GD	430594	FDL456TD100GD	430571
	125	FDL36TD125GD	430524	FDL436TD125GD	430563	FDL46TD125GD	430597	FDL456TD125GD	430574
	160	FDL36TD160GD	435845	FDL436TD160GD	435848	FDL46TD160GD	435854	FDL456TD160GD	435851

One code covers: A standard fixed front connection breaker + DIN-Rail mounting kit + Toggle elongator + Breaker finishing covers + Fixation hardware

(1) Neutral on the left. If neutral on the right is needed, please contact us.
(2) Fixation hardware not suitable for mounting of one individual single pole breaker (see page A.10)

FD160 - Complete circuit breaker

Generator Thermal Magnetic LTMD (Settable thermals calibrated at 40°C)

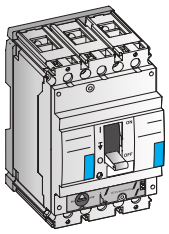

	In (A)	3 pole 3 trips Cat. no.	3 pole 3 trips Ref. no.	4 pole 3 trips[1] Cat. no.	4 pole 3 trips[1] Ref. no.	4 pole 4 trips[1] Cat. no.	4 pole 4 trips[1] Ref. no.	4 pole 3.5 trips (N=50%)[1] Cat. no.	4 pole 3.5 trips (N=50%)[1] Ref. no.
50 kA FDN	25	FDN36TG025ED	**430107**	FDN436TG025ED	**430124**	FDN46TG025ED	**430138**	-	-
	32	FDN36TG032ED	**430108**	FDN436TG032ED	**430125**	FDN46TG032ED	**430139**	-	-
	40	FDN36TG040ED	**430109**	FDN436TG040ED	**430126**	FDN46TG040ED	**430140**	-	-
	50	FDN36TG050ED	**430110**	FDN436TG050ED	**430127**	FDN46TG050ED	**430141**	-	-
	63	FDN36TG063ED	**430111**	FDN436TG063ED	**430128**	FDN46TG063ED	**430142**	FDN456TG063ED	**430130**
	80	FDN36TG080GD	**430649**	FDN436TG080GD	**430707**	FDN46TG080GD	**430771**	FDN456TG080GD	**430729**
	100	FDN36TG100GD	**430652**	FDN436TG100GD	**430710**	FDN46TG100GD	**430774**	FDN456TG100GD	**430732**
	125	FDN36TG125GD	**430655**	FDN436TG125GD	**430713**	FDN46TG125GD	**430777**	FDN456TG125GD	**430735**
	160	FDN36TG160GD	**433575**	FDN436TG160GD	**433581**	FDN46TG160GD	**433593**	FDN456TG160GD	**433587**

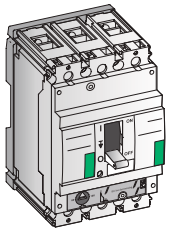

	In (A)	3 pole 3 trips Cat. no.	3 pole 3 trips Ref. no.	4 pole 3 trips[1] Cat. no.	4 pole 3 trips[1] Ref. no.	4 pole 4 trips[1] Cat. no.	4 pole 4 trips[1] Ref. no.	4 pole 3.5 trips (N=50%)[1] Cat. no.	4 pole 3.5 trips (N=50%)[1] Ref. no.
80kA FDH	25	FDH36TG025ED	**430027**	FDH436TG025ED	**430044**	FDH46TG025ED	**430058**	-	-
	32	FDH36TG032ED	**430028**	FDH436TG032ED	**430045**	FDH46TG032ED	**430059**	-	-
	40	FDH36TG040ED	**430029**	FDH436TG040ED	**430046**	FDH46TG040ED	**430060**	-	-
	50	FDH36TG050ED	**430030**	FDH436TG050ED	**430047**	FDH46TG050ED	**430061**	-	-
	63	FDH36TG063ED	**430031**	FDH436TG063ED	**430048**	FDH46TG063ED	**430062**	FDH456TG063ED	**430050**
	80	FDH36TG080GD	**430357**	FDH436TG080GD	**430415**	FDH46TG080GD	**430479**	FDH456TG080GD	**430437**
	100	FDH36TG100GD	**430360**	FDH436TG100GD	**430418**	FDH46TG100GD	**430482**	FDH456TG100GD	**430440**
	125	FDH36TG125GD	**430363**	FDH436TG125GD	**430421**	FDH46TG125GD	**430485**	FDH456TG125GD	**430443**
	160	FDH36TG160GD	**435824**	FDH436TG160GD	**435830**	FDH46TG160GD	**435842**	FDH456TG160GD	**435836**

One code covers: A standard fixed front connection breaker + DIN-Rail mounting kit + Toggle elongator + Breaker finishing covers + Fixation hardware

Motor Protection (Mag Break™ Magnetic Only Breakers (Rated at 40°C)

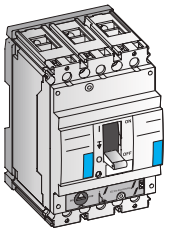

	In (A)	3 pole Cat. no.	3 pole Ref. no.	4 pole[1] Cat. no.	4 pole[1] Ref. no.
50kA FDN	3	FDN36MC003ED	**436409**	FDN436MC003ED	**436411**
	7	FDN36MC007ED	**430095**	FDN436MC007ED	**430112**
	12.5	FDN36MC012ED	**430096**	FDN436MC012ED	**430113**
	20	FDN36MC020ED	**430097**	FDN436MC020ED	**430114**
	30	FDN36MC030ED	**430098**	FDN436MC030ED	**430115**
	50	FDN36MC050ED	**430099**	FDN436MC050ED	**430116**
	80	FDN36MC080GD	**430610**	FDN436MC080GD	**430668**
	100	FDN36MC100GD	**430613**	FDN436MC100GD	**430671**

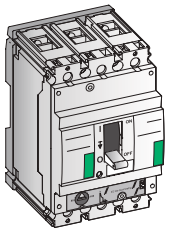

	In (A)	3 pole Cat. no.	3 pole Ref. no.	4 pole[1] Cat. no.	4 pole[1] Ref. no.
80kA FDH	3	FDH36MC003ED	**436396**	FDH436MC003ED	**436398**
	7	FDH36MC007ED	**430015**	FDH436MC007ED	**430032**
	12.5	FDH36MC012ED	**430016**	FDH436MC012ED	**430033**
	20	FDH36MC020ED	**430017**	FDH436MC020ED	**430034**
	30	FDH36MC030ED	**430018**	FDH436MC030ED	**430035**
	50	FDH36MC050ED	**430019**	FDH436MC050ED	**430036**
	80	FDH36MC080GD	**430318**	FDH436MC080GD	**430376**
	100	FDH36MC100GD	**430321**	FDH436MC100GD	**430379**

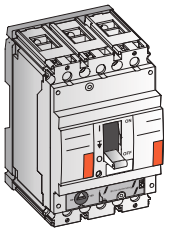

	In (A)	3 pole Cat. no.	3 pole Ref. no.	4 pole[1] Cat. no.	4 pole[1] Ref. no.
150kA FDL	20	FDL36MC020ED	**430065**	FDL436MC020ED	**430077**
	30	FDL36MC030ED	**430066**	FDL436MC030ED	**430078**
	50	FDL36MC050ED	**430067**	FDL436MC050ED	**430079**
	80	FDL36MC080GD	**430498**	FDL436MC080GD	**430537**
	100	FDL36MC100GD	**430501**	FDL436MC100GD	**430540**

One code covers: A standard fixed front connection breaker + DIN-Rail mounting kit + Toggle elongator + Breaker finishing covers + Fixation hardware + IPXXB covers (Finger protection on connection clamps)

Complete Non-Automatic Circuit Breaker (Switch rated at 40°C)

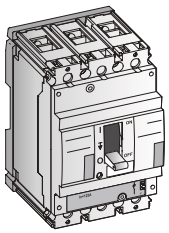

	In (A)	3 pole Cat. no.	3 pole Ref. no.	4 pole[1] Cat. no.	4 pole[1] Ref. no.
FDY	63	FDY306D063ED	**430150**	FDY406D063ED	**430151**
	160	FDY306D160GD	**430805**	FDY406D160GD	**430810**

One code covers: A standard fixed front connection breaker + DIN-Rail mounting kit + Toggle elongator + Breaker finishing covers + Fixation hardware

(1) Neutral on the left. If neutral on the right is needed, please contact us.

FD160 - Complete Circuit Breaker

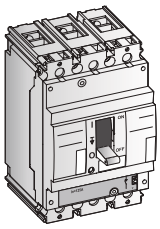

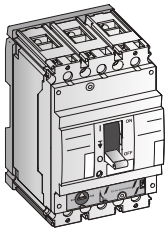

Line Thermal Magnetic LTM or LTMD (Settable Thermals cailbrated at 55°C)

	In (A)	3 pole 3 trips Cat. no.	Ref. no.		3 pole 3 trips Cat. no.	Ref. no.
25 kA FDE	16	FDE36T5C016EF	**436582**	36 kA FDS	FDS36T5D016ED	**430546**
	20	FDE36T5C020EF	**436583**		FDS36T5D020ED	**430577**
	25	FDE36T5C025EF	**436584**		FDS36T5D025ED	**430578**
	32	FDE36T5C032EF	**436588**		FDS36T5D032ED	**430579**
	40	FDE36T5C040EF	**436589**		FDS36T5D040ED	**430580**
	50	FDE36T5C050EF	**436591**		FDS36T5D050ED	**430814**
	63	FDE36T5C063EF	**436593**		FDS36T5D063ED	**430816**
	80	FDE36T5C080GF	**436594**		FDS36T5D080GD	**430817**
	100	FDE36T5C100GF	**436595**		FDS36T5D100GD	**430819**
	125	FDE36T5C125GF	**436596**		FDS36T5D125GD	**430820**
	160	FDE36T5C160GF	**436600**		FDS36T5D160GD	**430822**
50kA FDN	16	FDN36T5D016ED	**430833**	80 kA FDH	FDH36T5D016ED	**430850**
	20	FDN36T5D020ED	**430835**		FDH36T5D020ED	**430851**
	25	FDN36T5D025ED	**430836**		FDH36T5D025ED	**430853**
	32	FDN36T5D032ED	**430838**		FDH36T5D032ED	**430854**
	40	FDN36T5D040ED	**430839**		FDH36T5D040ED	**430857**
	50	FDN36T5D050ED	**430841**		FDH36T5D050ED	**430862**
	63	FDN36T5D063ED	**430842**		FDH36T5D063ED	**430866**
	80	FDN36T5D080GD	**430844**		FDH36T5D080GD	**430871**
	100	FDN36T5D100GD	**430845**		FDH36T5D100GD	**430874**
	125	FDN36T5D125GD	**430847**		FDH36T5D125GD	**430875**
	160	FDN36T5D160GD	**430848**		FDH36T5D160GD	**430881**

One code covers: A standard fixed front connection breaker + Fixation hardware + DIN rail mounting kit (Except 25kA variant)

FD - Internal accessories

Contacts

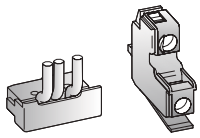

	Normally open		Normally closed		Changeover	
	Cat. no.	Ref. no.	Cat. no.	Ref. no.	Cat. no.	Ref. no.
Aux. switch right mounted	FAS10R	**430837**	FAS01R	**430831**	-	-
Aux. switch left mounted	FAS10L	**430834**	FAS01L	**430828**	-	-
Bell alarm trip unit	FABAT10	**430818**	FABAT01	**430815**	-	-
Bell alarm RCD device	FABAT10	**430818**	FABAT01	**430815**	-	-
Bell alarm mechanism[1]	-	-	-	-	FDBAM11	**430880**

Releases

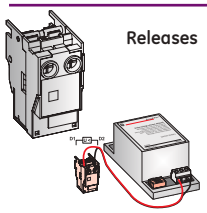

	Shunt		Undervoltage		Delayed undervoltage	
12V AC/DC	FASHTB	**430840**	FAUVRB	**431960**		
24V AC/DC	FASHTD	**430843**	FAUVRD	**430861**	-	-
48V AC/DC	FASHTF	**430846**	FAUVRF	**430864**	-	-
60V AC/DC	FASHTH	**435118**	FAUVRH	**435120**	-	-
110 AC/DC	FASHTJ	**430849**	FAUVRJ	**430867**	-	-
220/240V AC/DC	FASHTN	**430852**	FAUVRN	**430870**	FAUVDN	**430858**
400/415V AC	FASHTU	**430855**	FAUVR8	**436472**	-	-
440/480V AC	-	-	FAUVRU	**430873**	-	-

FD - Operators

Electrical operators

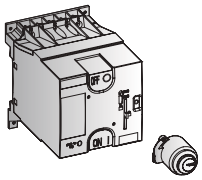

48V AC/DC	FDEMFF	**430929**
60V AC/DC	FDEMFH	**430932**
110V AC/DC	FDEMFJ	**430935**
220/250V AC/DC	FDEMFN	**430938**
400/440V AC	FDEMF8	**430920**
Keylock for operator Ronis[2]	FD1BRE	**430877**
Keylock for operator Profalux[2]	FD1BPE	**430876**

Rotary handles

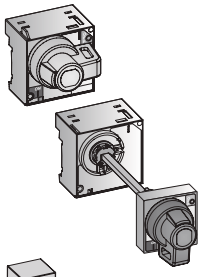

	Direct on device		Rotary handle for use through door or cover plate[3]		Panel or door mounted	
Grey	FDNRF/5	**436478**	FDNRC/5	**436474**	-	-
Red	FDNRFV/5	**436479**	FDNRCV/5	**436475**	-	-
Grey + Early closing Aux. Switches 2xNO[4]	-	-	FDNRY/5	**436487**	-	-
Red + Early closing Aux. Switches 2xNO[4]	-	-	FDNRYV/5	**436488**	-	-
Grey	-	-	-	-	FDNRD/5	**436476**
Red	-	-	-	-	FDNRDV/5	**436477**
Grey + Early closing Aux. Switches 2xNO[4]	-	-	-	-	FDNRZ/5	**436489**
Red + Early closing Aux. Switches 2xNO[4]	-	-	-	-	FDNRZV/5	**436490**

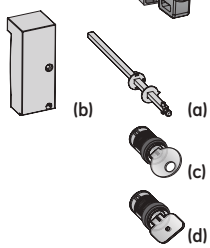

Accessories				
Extension shaft kit (max. 600 mm) (a)	FDNRE	**430986**	Only for use with panel or door mounted type	
Side-by-side installation adapter kit (b)	FDNR4	**430971**	Not for use with panel or door mounted type	
Ronis keylock 1104B nr. BC 1027[2] (c)	FA1BR1	**430088**		
Ronis keylock 1104B nr. BC 1053[2] (c)	FA1BR2	**430089**		
Ronis keylock 1104B nr. BC 2932[2] (c)	FA1BR3	**430504**		
Ronis keylock 1104B nr. BC 2911[2] (c)	FA1BR4	**430505**		
Ronis keylock 1104B nr. BC 2936[2] (c)	FA1BR5	**430506**		
Ronis keylock 1104B nr. BC 2940[2] (c)	FA1BR6	**430507**		
Ronis lock with random key[2] (c)	FA1BRH	**430068**		
Profalux lock with random key[2] (d)	FA1BPH	**430813**		

FD - Residual current devices

RCD side mounted[5]

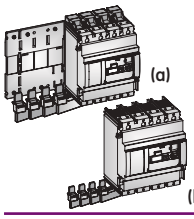

Standard		3 pole		4 pole	
Voltage 220/440V AC	(a)	FDQDS3M/6	**431095**	FDQDS4M/6	**431103**
Voltage 400/690V AC	(a)	FDQDS3H/6	**431090**	FDQDS4H/6	**431101**
One code covers an RCD with: DIN-Rail mounting kit & multidirectional supply kit					
Side connected only					
Voltage 220/440V AC	(b)	FDQDI3M/6	**431086**	FDQDI4M/6	**431088**
One code covers an RCD with: DIN-Rail mounting kit and interconnection kit.					

RCD bottom mounted[5] (below trip unit area)

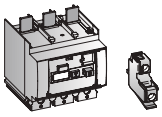

Voltage 220/440V AC	FDQDB3M/6	**431078**	FDQDB4M/6	**431084**
Voltage 400/690V AC	FDQDB3H/6	**431076**	FDQDB4H/6	**431080**
	Normally open		**Normally closed**	
Bell Alarm RCD device	FABAT10	**430818**	FABAT 01	**430815**
One code covers an RCD with: Sealable connection cover (cut-out adaptor FDUF)				

(1) Not for all FDC and FDE types
(2) Key included
(3) Add door flange FDFH to allow use of the door interlock options
(4) On request 1xNO/1xNC is available.
(5) Not possible on FDC and FDE types with TF and TC trip unit. 100/200V AC rating available on request

FD - Plug-in system[1]

Main system complete

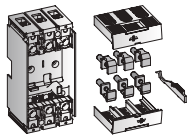

Fixed Mobile

	3 pole		4 pole	
	Cat. no.	Ref. no.	Cat. no.	Ref. no.
Complete set for breaker	FDDDF3	**430893**	FDDDF4	**430896**
Fixed part for breaker	FDDFF3	**430899**	FDDFF4	**430902**
Mobile part for breaker	FDDMP3	**430905**	FDDMP4	**430908**
Fixed part for breaker & RCD	FDDFQ3	**433489**	FDDFQ4	**433492**
Mobile part for breaker & RCD	FDDMP3	**430905**	FDDMP4	**430908**

Complete set: Fixed and mobile part with connection and fixation hardware
Fixed part: Fixed base with connection and fixation and hardware
Mobile part: Mechanism trip device, terminal shields and set of 3 or 4 pole plugs

Auxiliary disconnects secondary wiring[2]

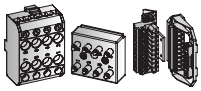

Complete set 8 pole	FAPFM	**430824**
Fixed part 8 pole	FAPF8	**430823**
Mobile part 8 pole	FAPM8	**430826**
10 pole wired Plug & Socket for Plug-in Device	FAPPS	**430827**

Insertion prevention kit

Insertion prevention kit (of ....wrong A rating)	FAPIP	**430825**

FD - Connections: Optional[4]

Extenders

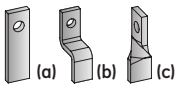

		3 pole		4 pole	
Standard flat type	(a)	FDBES3	**430887**	FDBES4	**430888**
Heightened type	(b)	FDBEH3	**430885**	FDBEH4	**430886**
Twisted 90°	(c)	FDBEA3	**430883**	FDBEA4	**430884**

Spreader flat

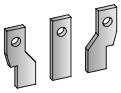

Pole spacing 35 mm		FDBSS3	**430891**	FDBSS4	**430892**

External box clamps

Cable Cu/Al 95 mm^2 [3]		FDTCA1316	**433400**	FDTCA1416	**433401**

Rear connections

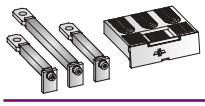

Set 3 pole (2 short, 1 long)		FDBRC3	**430889**	-	-
Set 4 pole (2 short, 2 long)		-	**-**	FDBRC4	**430890**
Spares, set of 2 short types		FDBRCS2	**433358**	-	-
Spares, set of 2 long types		FDBRCL2	**433357**	-	-

FD - Installation accessories

Terminal shields (with finishing covers)

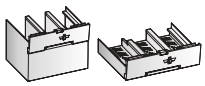

	3 pole		4 pole	
Long, set of 2 pcs.	FDJL3	**430951**	FDJL4	**430954**
Short, set of 2 pcs.	FDJS3	**430960**	FDJS4	**430963**

Specific to connection area

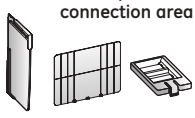

Phase separators, set of 12 pcs.	FDJP	**430957**		
Backplate set of 2 pcs. (3 or 4 pole)	FDJB	**430945**		
Finger protection IPXXB (set of 12 pcs.)[5]	FDJK	**430069**		

Covers

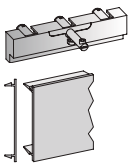

Cutout adaptor, Breaker + Trip unit	FDUF3	**430830**	FDUF4	**430832**
Cutout filler for cover plate (64 mm), length of 1.2 m	FBF6	**883970**	-	-

(1) Plug-in system max. 125A.
(2) Only necessary when internal accessories or an electrical operator are used.
(3) External box clamps are always delivered with standard extender
(4) Set for equipping the line OR load side of breaker.
(5) Supplied with mag. break types.

FD - Installation accessories *(continued)*

		Cat. no.	Ref. no.	Cat. no.	Ref. no.
Padlocking devices for toggle operator(1) 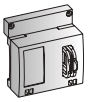	Padlocking removable	FD1PR	**430879**		
	Padlocking fixed	FD1PF	**430878**		
Circuit indication/coding	Set of 20 blank labels	FAC	**430821**		
Heightning set for Redline/ElfaPlus MCB's 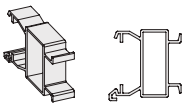	Length = (18 mod. of 18 mm) 354 mm	FDKE	**617947**		
Mounting kit for individual single pole breaker	Set of 50 pcs.	FDKM1	**436720**		
		3 pole		**4 pole**	
Door Flanges	Breaker front face and RCD	FDFF3	**430941**	FDFF4	**430942**
	Rotary handle (through cover plate model)	FDFH	**430829**	-	-
	Electrical operator	FDFE	**432010**	-	-
Spare parts 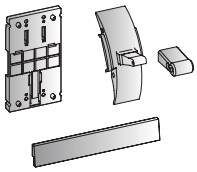	DIN-rail adaptor kit(2)	FDKD3	**430966**	FDKD4	**430967**
	Finishing covers, set of 2 pcs.(2)	FDUA3	**431025**	FDUA4	**431026**
	Spare toggle (set of 5 pieces)	FDUT	**433539**	-	-

(1) Padlocks not included
(2) Supplied with breakers, not with all FDC and FDE types

LTM
Line thermal magnetic protection
LTMD
Selective thermal magnetic protection
GTM
Generator thermal magnetic protection
Mag Break™
Magnetic Only protection
SMR1
Selective electronic trip unit
Y
Non Automatic or switch (not mentioned in tables)

FE Frame

Breaking capacities

Icu 400/415V AC in kA eff.

Type	V	N	H	L
FE160		50	80	150
FE250	36	50	80	150

Protection

Trip Unit	Rated Current (A)	LTM	LTMD	GTM	Mag Break™	SMR1
FE160	3	-	-	-	N, H, L	-
	7	-	-	-	N, H, L	-
	12.5	-	-	-	N, H, L	-
	20	-	-	-	N, H, L	-
	25	N, H, L	-	-	-	N, H, L
	30	-	-	-	N, H, L	-
	32	N, H, L	-	-	-	-
	40	N, H, L	-	-	-	-
	50	N, H, L	-	-	N, H, L	-
	63	N, H, L	-	-	-	N, H, L
	80	N, H, L	-	-	N, H, L	-
	100	N, H, L	N, H, L	N, H, L	N, H, L	-
	125	N, H, L	N, H, L	N, H, L	N, H, L	N, H, L
	160	N, H, L	N, H, L	N, H, L	N, H, L	N, H, L
FE250	125	V	N, H, L	-	-	N, H, L
	160	V	N, H, L	N, H, L	N, H, L	N, H, L
	200	V	N, H, L	N, H, L	N, H, L	-
	250	V	N, H, L	N, H, L	N, H, L	N, H, L

Number of poles/ protected poles (trips)					
3 pole 3 trips	V, N, H, L	N, H, L	N, H	N, H, L	N, H, L
4 pole 3 trips	N, H, L	N, H, L	N, H	N, H, L	N, H, L
4 pole 4 trips	V, N, H, L	N, H, L	N, H	-	N, H, L
4 pole 3.5 trips (N=50%)(1)	N, H, L	N, H, L	N, H	-	N, H, L

(1) Rated current ≥ 63A

Accessories (main types)

① Auxiliary contact left mounted (NO or NC) 1 or 2pcs.
② Auxiliary contact right mounted (NO or NC) 1 or 2pcs.
③ Bell Alarm thermal magnetic trip unit (NO or NC)
③a Bell Alarm electronic trip unit (NO or NC)
④ Bell Alarm mechanism (NO or NC)
⑤ Shunt or Undervoltage release
⑤a Actuator for electronic trip unit.
⑥ Operators
Rotary handle
Electrical operator
⑦ Bottom mounted RCD (below trip unit)
⑧ (Insert indicates Bell alarm contact mounting) Plug-in or draw-out system

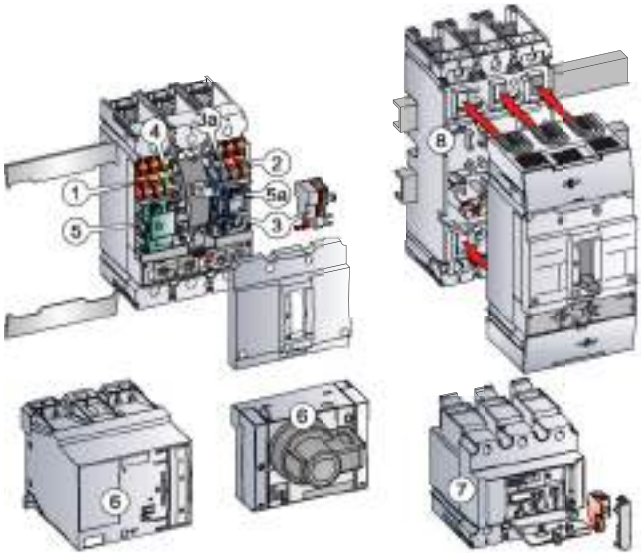

FE160 - Complete circuit breaker

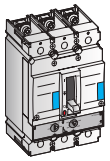
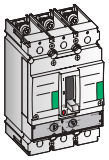
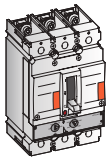

Line Thermal Magnetic LTM (adjustable settings; calibrated at 40°C)

	In (A)	3 pole 3 trips		4 pole 3 trips[1]		4 pole 4 trips[1]		4 pole 3.5 trips (N=50%)[1]	
		Cat. no.	Ref. no.	Cat. no.	Ref. no.	Cat. no.	Ref. no.	Cat. no.	Ref. no.
50 kA FEN	25	FEN36TA025JF	435103	FEN436TA025JF	435178	FEN46TA025JF	435214	-	-
	32	FEN36TA032JF	435106	FEN436TA032JF	435181	FEN46TA032JF	435217	-	-
	40	FEN36TA040JF	435109	FEN436TA040JF	435184	FEN46TA040JF	435220	-	-
	50	FEN36TA050JF	435112	FEN436TA050JF	435187	FEN46TA050JF	435223	-	-
	63	FEN36TA063JF	435115	FEN436TA063JF	435190	FEN46TA063JF	435226	FEN456TA063JF	435202
	80	FEN36TA080JF	431751	FEN436TA080JF	431838	FEN46TA080JF	431949	FEN456TA080JF	431886
	100	FEN36TA100JF	431757	FEN436TA100JF	431844	FEN46TA100JF	431955	FEN456TA100JF	431892
	125	FEN36TA125JF	431763	FEN436TA125JF	431850	FEN46TA125JF	431961	FEN456TA125JF	431898
	160	FEN36TA160JF	431769	FEN436TA160JF	431856	FEN46TA160JF	431967	FEN456TA160JF	431904
80 kA FEH	25	FEH36TA025JF	434772	FEH436TA025JF	434847	FEH46TA025JF	434883	-	-
	32	FEH36TA032JF	434775	FEH436TA032JF	434850	FEH46TA032JF	434886	-	-
	40	FEH36TA040JF	434778	FEH436TA040JF	434853	FEH46TA040JF	434889	-	-
	50	FEH36TA050JF	434781	FEH436TA050JF	434856	FEH46TA050JF	434892	-	-
	63	FEH36TA063JF	434784	FEH436TA063JF	434859	FEH46TA063JF	434895	FEH456TA063JF	434871
	80	FEH36TA080JF	431165	FEH436TA080JF	431252	FEH46TA080JF	431363	FEH456TA080JF	431300
	100	FEH36TA100JF	431171	FEH436TA100JF	431258	FEH46TA100JF	431369	FEH456TA100JF	431306
	125	FEH36TA125JF	431177	FEH436TA125JF	431264	FEH46TA125JF	431375	FEH456TA125JF	431312
	160	FEH36TA160JF	431183	FEH436TA160JF	431270	FEH46TA160JF	431381	FEH456TA160JF	431318
150 kA FEL	25	FEL36TA025JF	434970	FEL436TA025JF	435013	FEL46TA025JF	435049	-	-
	32	FEL36TA032JF	434973	FEL436TA032JF	435016	FEL46TA032JF	435052	-	-
	40	FEL36TA040JF	434976	FEL436TA040JF	435019	FEL46TA040JF	435055	-	-
	50	FEL36TA050JF	434979	FEL436TA050JF	435022	FEL46TA050JF	435058	-	-
	63	FEL36TA063JF	434982	FEL436TA063JF	435025	FEL46TA063JF	435061	FEL456TA063JF	435037
	80	FEL36TA080JF	431458	FEL436TA080JF	431545	FEL46TA080JF	431656	FEL456TA080JF	431593
	100	FEL36TA100JF	431464	FEL436TA100JF	431551	FEL46TA100JF	431662	FEL456TA100JF	431599
	125	FEL36TA125JF	431470	FEL436TA125JF	431557	FEL46TA125JF	431668	FEL456TA125JF	431605
	160	FEL36TA160JF	431476	FEL436TA160JF	431563	FEL46TA160JF	431674	FEL456TA160JF	431611

One code covers: A standard fixed front connection breaker + Toggle elongator + Breaker finishing covers + Fixation hardware

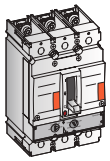

Selective Thermal Magnetic LTMD (adjustable settings; calibrated at 40°C)

	In (A)	3 pole 3 trips		4 pole 3 trips[1]		4 pole 4 trips[1]		4 pole 3.5 trips (N=50%)[1]	
50 kA FEN	100	FEN36TD100JF	432945	FEN436TD100JF	432994	FEN46TD100JF	433061	FEN456TD100JF	433028
	125	FEN36TD125JF	432953	FEN436TD125JF	433001	FEN46TD125JF	433067	FEN456TD125JF	433034
	160	FEN36TD160JF	432971	FEN436TD160JF	433007	FEN46TD160JF	433073	FEN456TD160JF	433040
80 kA FEH	100	FEH36TD100JF	431007	FEH436TD100JF	432198	FEH46TD100JF	432287	FEH456TD100JF	432242
	125	FEH36TD125JF	431021	FEH436TD125JF	432205	FEH46TD125JF	432296	FEH456TD125JF	432250
	160	FEH36TD160JF	431965	FEH436TD160JF	432214	FEH46TD160JF	432303	FEH456TD160JF	432259
150 kA FEL	100	FEL36TD100JF	432332	FEL436TD100JF	432374	FEL46TD100JF	432907	FEL456TD100JF	432699
	125	FEL36TD125JF	432341	FEL436TD125JF	432573	FEL46TD125JF	432921	FEL456TD125JF	432747
	160	FEL36TD160JF	432349	FEL436TD160JF	432585	FEL46TD160JF	432927	FEL456TD160JF	432834

One code covers: A standard fixed front connection breaker + Toggle elongator + Breaker finishing covers + Fixation hardware

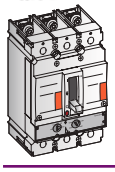

Generator Thermal Magnetic GTM (adjustable settings; calibrated at 40°C)

	In (A)	3 pole 3 trips		4 pole 3 trips[1]		4 pole 4 trips[1]		4 pole 3.5 trips (N=50%)[1]	
50 kA FEN	100	FEN36TG100JF	435139	FEN436TG100JF	436014	FEN46TG100JF	435250	FEN456TG100JF	436020
	125	FEN36TG125JF	435142	FEN436TG125JF	436015	FEN46TG125JF	435253	FEN456TG125JF	436021
	160	FEN36TG160JF	435148	FEN436TG160JF	436016	FEN46TG160JF	435259	FEN456TG160JF	436022
80 kA FEH	100	FEH36TG100JF	434808	FEH436TG100JF	435902	FEH46TG100JF	434919	FEH456TG100JF	436026
	125	FEH36TG125JF	434811	FEH436TG125JF	435903	FEH46TG125JF	434922	FEH456TG125JF	436027
	160	FEH36TG160JF	434817	FEH436TG160JF	435904	FEH46TG160JF	434928	FEH456TG160JF	436028
150 kA FEL	100	FEL36TG100JF	435923	FEL436TG100JF	435944	FEL46TG100JF	435992	FEL456TG100JF	435962
	125	FEL36TG125JF	435926	FEL436TG125JF	435947	FEL46TG125JF	435995	FEL456TG125JF	435965
	160	FEL36TG160JF	435932	FEL436TG160JF	435950	FEL46TG160JF	436002	FEL456TG160JF	435968

One code covers: A standard fixed front connection breaker + Toggle elongator + Breaker finishing covers + Fixation hardware

(1) Neutral on the left. If neutral on the right is needed, please contact us.

FE160 - Complete circuit breaker

Motor protection (Mag Break™) Magnetic Only Breaker[2] (Rated at 40°C)

	In (A)	3 pole 3 trips Cat. no.	3 pole 3 trips Ref. no.	4 pole 3 trips[1] Cat. no.	4 pole 3 trips[1] Ref. no.				
50kA FEN	3	FEN36MC003JF	436365	-	-				
	7	FEN36MC007JF	435073	-	-				
	12.5	FEN36MC012JF	435076	-	-				
	20	FEN36MC020JF	435079	-	-				
	30	FEN36MC030JF	435082	-	-				
	50	FEN36MC050JF	435085	FEN436MC050JF	435160				
	80	FEN36MC080JF	435899	-	-				
	100	FEN36MC100JF	435088	FEN436MC100JF	435163				
	125	FEN36MC125JF	436335	FEN436MC125JF	436356				
	160	FEN36MC160JF	435094	FEN436MC160JF	435169				

80kA FEH	3	FEH36MC003JF	436361	-	-				
	7	FEH36MC007JF	434742	-	-				
	12.5	FEH36MC012JF	434745	-	-				
	20	FEH36MC020JF	434748	-	-				
	30	FEH36MC030JF	434751	-	-				
	50	FEH36MC050JF	434754	FEH436MC050JF	434829				
	80	FEH36MC080JF	435893	-	-				
	100	FEH36MC100JF	434757	FEH436MC100JF	434832				
	125	FEH36MC125JF	436327	FEH436MC125JF	436329				
	160	FEH36MC160JF	434763	FEH436MC160JF	434838				

150kA FEL	3	FEL36MC003JF	436363	-	-				
	7	FEL36MC007JF	434940	-	-				
	12.5	FEL36MC012JF	434943	-	-				
	20	FEL36MC020JF	434946	-	-				
	30	FEL36MC030JF	434949	-	-				
	50	FEL36MC050JF	434952	FEL436MC050JF	434994				
	80	FEL36MC080JF	435896	-	-				
	100	FEL36MC100JF	434955	FEL436MC100JF	434997				
	125	FEL36MC125JF	436331	FEL436MC125JF	436333				
	160	FEL36MC160JF	434961	FEL436MC160JF	435004				

One code covers: A standard fixed front connection breaker + Toggle elongator + Breaker finishing covers + Fixation hardware

Selective Electronic Trip Unit (SMR1) without Rating Plug

	In (A)	3 pole Cat. no.	3 pole Ref. no.	4 pole[1] Cat. no.	4 pole[1] Ref. no.				
50 kA FEN	25	FEN36AA025JBF	435881	FEN46AA025JBF	435887				
	63	FEN36AA063JEF	435884	FEN46AA063JEF	435890				
	125	FEN36AA125JGF	431698	FEN46AA125JGF	431787				
	160	FEN36AA160JJF	431703	FEN46AA160JJF	431790				

80 kA FEH	25	FEH36AA025JBF	435857	FEH46AA025JBF	435863				
	63	FEH36AA063JEF	435860	FEH46AA063JEF	435866				
	125	FEH36AA125JGF	431112	FEH46AA125JGF	431201				
	160	FEH36AA160JJF	431117	FEH46AA160JJF	431204				

150 kA FEL	25	FEL36AA025JBF	435869	FEL46AA025JBF	435875				
	63	FEL36AA063JEF	435872	FEL46AA063JEF	435878				
	125	FEL36AA125JGF	431405	FEL46AA125JGF	431494				
	160	FEL36AA160JJF	431410	FEL46AA160JJF	431497				

One code covers: A standard fixed front connection breaker + Toggle elongator + Breaker finishing covers + Fixation hardware

Ir 0.625: 1xIn

Adjustable Rating Plugs for Trip Units SMR1

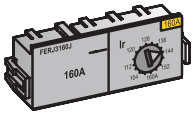

	In (A)	3 pole 3 trips Cat. no.	3 pole 3 trips Ref. no.	4 pole 3 trips[1] Cat. no.	4 pole 3 trips[1] Ref. no.	4 pole 4 trips[1] Cat. no.	4 pole 4 trips[1] Ref. no.	4 pole 3.5 trips (N=50%)[1] Cat. no.	4 pole 3.5 trips (N=50%)[1] Ref. no.
25A	16	FERJ3B0016	432174	FERJ43B0016	432210	FERJ4B0016	432276	-	-
	25	FERJ3B0025	432177	FERJ43B0025	432213	FERJ4B0025	432279	-	-
63A	40	FERJ3E0040	432180	FERJ43E0040	432216	FERJ4E0040	432282	-	-
	63	FERJ3E0063	432183	FERJ43E0063	432219	FERJ4E0063	432285	FERJ45E0063	432249
125A	80	FERJ3G0080	432186	FERJ43G0080	432222	FERJ4G0080	432288	FERJ45G0080	432252
	125	FERJ3G0125	432192	FERJ43G0125	432228	FERJ4G0125	432294	FERJ45G0125	432258
160A	100	FERJ3J0100	432189	FERJ43J0100	432225	FERJ4J0100	432291	FERJ45J0100	432255
	160	FERJ3J0160	432195	FERJ43J0160	432231	FERJ4J0160	432297	FERJ45J0160	432261

(1) Neutral on the left. If neutral on the right is needed, please contact us.
(2) All 3 and 7Amp FE size magnetic only breaker types have a breaking capacity at 690 Volt of 10kA.

FE160 - Complete circuit breaker

Ir 0.4: 1xIn

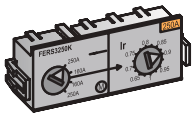

Switchable Rating Plugs for Trip Units SMR1

	In (A)	3 pole 3 trips Cat. no.	3 pole 3 trips Ref. no.	4 pole 3 trips[1] Cat. no.	4 pole 3 trips[1] Ref. no.	4 pole 4 trips[1] Cat. no.	4 pole 4 trips[1] Ref. no.	4 pole 3.5 trips (N=50%)[1] Cat. no.	4 pole 3.5 trips (N=50%)[1] Ref. no.
25A	25	FERS3B0025	**432312**	FERS43B0025	**432330**	FERS4B0025	**432363**	-	-
63A	63	FERS3E0063	**432315**	FERS43E0063	**432333**	FERS4E0063	**432366**	FERS45E0063	**432348**
125A	125	FERS3G0125	**432318**	FERS43G0125	**432336**	FERS4G0125	**432369**	FERS45G0125	**432351**
160A	160	FERS3J0160	**432321**	FERS43J0160	**432339**	FERS4J0160	**432372**	FERS45J0160	**432354**

Selective Electronic Trip Unit (SMR1) with Switchable Rating Plug

50 kA FEN

In (A)	3 pole 3 trips Cat. no.	3 pole 3 trips Ref. no.	4 pole 3 trips[1] Cat. no.	4 pole 3 trips[1] Ref. no.	4 pole 4 trips[1] Cat. no.	4 pole 4 trips[1] Ref. no.	4 pole 3.5 trips (N=50%)[1] Cat. no.	4 pole 3.5 trips (N=50%)[1] Ref. no.
125	FEN36SA125JGF	**431724**	FEN436SA125JGF	**431811**	FEN46SA125JGF	**431922**	FEN456SA125JGF	**431871**
160	FEN36SA160JJF	**431727**	FEN436SA160JJF	**431814**	FEN46SA160JJF	**431925**	FEN456SA160JJF	**431874**

80 kA FEH

In (A)	3 pole 3 trips Cat. no.	3 pole 3 trips Ref. no.	4 pole 3 trips[1] Cat. no.	4 pole 3 trips[1] Ref. no.	4 pole 4 trips[1] Cat. no.	4 pole 4 trips[1] Ref. no.	4 pole 3.5 trips (N=50%)[1] Cat. no.	4 pole 3.5 trips (N=50%)[1] Ref. no.
125	FEH36SA125JGF	**431138**	FEH436SA125JGF	**431225**	FEH46SA125JGF	**431336**	FEH456SA125JGF	**431285**
160	FEH36SA160JJF	**431141**	FEH436SA160JJF	**431228**	FEH46SA160JJF	**431339**	FEH456SA160JJF	**431288**

150 kA FEL

In (A)	3 pole 3 trips Cat. no.	3 pole 3 trips Ref. no.	4 pole 3 trips[1] Cat. no.	4 pole 3 trips[1] Ref. no.	4 pole 4 trips[1] Cat. no.	4 pole 4 trips[1] Ref. no.	4 pole 3.5 trips (N=50%)[1] Cat. no.	4 pole 3.5 trips (N=50%)[1] Ref. no.
125	FEL36SA125JGF	**431431**	FEL436SA125JGF	**431518**	FEL46SA125JGF	**431629**	FEL456SA125JGF	**431578**
160	FEL36SA160JJF	**431434**	FEL436SA160JJF	**431521**	FEL46SA160JJF	**431632**	FEL456SA160JJF	**431581**

One code covers: A standard fixed front connection breaker + Toggle elongator + Breaker finishing covers + Fixation hardware

Complete Non-Automatic Circuit Breaker (Switch rated at 40°C)

FEY

In (A)	3 pole		4 pole[1]	
160	FEY306D160JF	**431988**	FEY406D160JF	**431994**

One code covers: A standard fixed front connection breaker + Toggle elongator + Breaker finishing covers + Fixation hardware

(1) Neutral on the left. If neutral on the right is needed, please contact us

FE250 - Complete circuit breaker

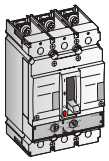

Line Thermal Magnetic LTM (adjustable settings; calibrated at 40°C)

	In (A)	3 pole 3 trips Cat. no.	Ref. no.	4 pole 4 trips[1] Cat. no.	Ref. no.
36 kA FEV	125	FEV36TA125KF	**432416**	FEV46TA125KF	**431082**
	160	FEV36TA160KF	**436798**	FEV46TA160KF	**436817**
	200	FEV36TA200KF	**431058**	FEV46TA200KF	**431094**
	250	FEV36TA250KF	**431061**	FEV46TA250KF	**431097**

One code covers: A standard fixed front connection breaker + Fixation hardware

Selective Thermal Magnetic LTMD (adjustable settings; calibrated at 40°C)

	In (A)	3 pole 3 trips		4 pole 3 trips[1]		4 pole 4 trips[1]		4 pole 3.5 trips (N=50%)[1]	
50 kA FEN	125	FEN36TD125KF	**432962**	FEN436TD125KF	**433004**	FEN46TD125KF	**433070**	FEN456TD125KF	**433037**
	160	FEN36TD160KF	**432976**	FEN436TD160KF	**433010**	FEN46TD160KF	**433076**	FEN456TD160KF	**433043**
	200	FEN36TD200KF	**432979**	FEN436TD200KF	**433013**	FEN46TD200KF	**433079**	FEN456TD200KF	**433046**
	250	FEN36TD250KF	**432982**	FEN436TD250KF	**433016**	FEN46TD250KF	**433082**	FEN456TD250KF	**433049**

80 kA FEH	125	FEH36TD125KF	**431393**	FEH436TD125KF	**432209**	FEH46TD125KF	**432300**	FEH456TD125KF	**432254**
	160	FEH36TD160KF	**431980**	FEH436TD160KF	**432218**	FEH46TD160KF	**432307**	FEH456TD160KF	**432263**
	200	FEH36TD200KF	**432076**	FEH436TD200KF	**432223**	FEH46TD200KF	**432311**	FEH456TD200KF	**432266**
	250	FEH36TD250KF	**432096**	FEH436TD250KF	**432227**	FEH46TD250KF	**432316**	FEH456TD250KF	**432269**

150 kA FEL	125	FEL36TD125KF	**432344**	FEL436TD125KF	**432576**	FEL46TD125KF	**432924**	FEL456TD125KF	**432780**
	160	FEL36TD160KF	**432353**	FEL436TD160KF	**432588**	FEL46TD160KF	**432930**	FEL456TD160KF	**432843**
	200	FEL36TD200KF	**432357**	FEL436TD200KF	**432618**	FEL46TD200KF	**432933**	FEL456TD200KF	**432868**
	250	FEL36TD250KF	**432361**	FEL436TD250KF	**432621**	FEL46TD250KF	**432936**	FEL456TD250KF	**432871**

One code covers: A standard fixed front connection breaker + Toggle elongator + Breaker finishing covers + Fixation hardware

Generator Thermal Magnetic GTM (adjustable settings; calibrated at 40°C)

	In (A)	3 pole 3 trips		4 pole 3 trips[1]		4 pole 4 trips[1]		4 pole 3.5 trips (N=50%)[1]	
50kA FEN	160	FEN36TG160KF	**435151**	FEN436TG160KF	**436017**	FEN46TG160KF	**435262**	FEN456TG160KF	**436023**
	200	FEN36TG200KF	**435154**	FEN436TG200KF	**436018**	FEN46TG200KF	**435265**	FEN456TG200KF	**436024**
	250	FEN36TG250KF	**435157**	FEN436TG250KF	**436019**	FEN46TG250KF	**435268**	FEN456TG250KF	**436025**

80kA FEH	160	FEH36TG160KF	**434820**	FEH436TG160KF	**435905**	FEH46TG160KF	**434931**	FEH456TG160KF	**435908**
	200	FEH36TG200KF	**434823**	FEH436TG200KF	**435906**	FEH46TG200KF	**434934**	FEH456TG200KF	**435909**
	250	FEH36TG250KF	**434826**	FEH436TG250KF	**435907**	FEH46TG250KF	**434937**	FEH456TG250KF	**435910**

150kA FEL	160	FEL36TG160KF	**435935**	FEL436TG160KF	**435953**	FEL46TG160KF	**436005**	FEL456TG160KF	**435971**
	200	FEL36TG200KF	**435938**	FEL436TG200KF	**435956**	FEL46TG200KF	**436008**	FEL456TG200KF	**435974**
	250	FEL36TG250KF	**435941**	FEL436TG250KF	**435959**	FEL46TG250KF	**436011**	FEL456TG250KF	**435977**

One code covers: A standard fixed front connection breaker + Toggle elongator + Breaker finishing covers + Fixation hardware

Motor protection (Mag Break™) Magnetic Only Breaker (Rated at 40°C)

	In (A)	3 pole 3 trips		4 pole 3 trips[1]	
50kA FEN	160	FEN36MC160KF	**435097**	FEN436MC160KF	**435172**
	200	FEN36MC200KF	**436764**	FEN436MC200KF	**436765**
	250	FEN36MC250KF	**435100**	FEN436MC250KF	**435175**

80kA FEH	160	FEH36MC160KF	**434766**	FEH436MC160KF	**434841**
	200	FEH36MC200KF	**436754**	FEH436MC200KF	**436755**
	250	FEH36MC250KF	**434769**	FEH436MC250KF	**434844**

150kA FEL	160	FEL36MC160KF	**434964**	FEL436MC160KF	**435007**
	200	FEL36MC200KF	**436756**	FEL436MC200KF	**436763**
	250	FEL36MC250KF	**434967**	FEL436MC250KF	**435010**

One code covers: A standard fixed front connection breaker + Toggle elongator + Breaker finishing covers + Fixation hardware

(1) Neutral on the left. If neutral on the right is needed, please contact us.

FE250 - Complete circuit breaker

Selective Electronic Trip Unit (SMR1) without Rating Plug

	In (A)	3 pole Cat. no.	3 pole Ref. no.	4 pole[1] Cat. no.	4 pole[1] Ref. no.	Cat. no.	Ref. no.	Cat. no.	Ref. no.
50 kA FEN	125	FEN36AA125KGF	431920	FEN46AA125KGF	431938				
	160	FEN36AA160KJF	431706	FEN46AA160KJF	431793				
	250	FEN36AA250KKF	431709	FEN46AA250KKF	431796				
80 kA FEH	125	FEH36AA125KGF	431116	FEH46AA125KGF	431824				
	160	FEH36AA160KJF	431120	FEH46AA160KJF	431207				
	250	FEH36AA250KKF	431123	FEH46AA250KKF	431210				
150 kA FEL	125	FEL36AA125KGF	431836	FEL46AA125KGF	431890				
	160	FEL36AA160KJF	431413	FEL46AA160KJF	431500				
	250	FEL36AA250KKF	431416	FEL46AA250KKF	431503				

One code covers: A standard fixed front connection breaker + Toggle elongator + Breaker finishing covers + Fixation hardware

Ir 0.625: 1xIn

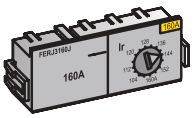

Adjustable Rating Plugs for Trip Units SMR1

	In (A)	3 pole 3 trips		4 pole 3 trips[1]		4 pole 4 trips[1]		4 pole 3.5 trips (N=50%)[1]	
125A	80	FERJ3G0080	432186	FERJ43G0080	432222	FERJ4G0080	432288	FERJ45G0080	432252
	125	FERJ3G0125	432192	FERJ43G0125	432228	FERJ4G0125	432294	FERJ45G0125	432258
160A	100	FERJ3J0100	432189	FERJ43J0100	432225	FERJ4J0100	432291	FERJ45J0100	432255
	160	FERJ3J0160	432195	FERJ43J0160	432231	FERJ4J0160	432297	FERJ45J0160	432261
250A	160	FERJ3K0160	432204	FERJ43K0160	432240	FERJ4K0160	432306	FERJ45K0160	432270
	250	FERJ3K0250	432207	FERJ43K0250	432243	FERJ4K0250	432309	FERJ45K0250	432273

Ir 0.4: 1xIn

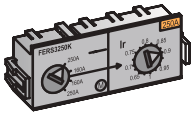

Switchable Rating Plugs for Trip Units SMR1

	In (A)	3 pole 3 trips		4 pole 3 trips[1]		4 pole 4 trips[1]		4 pole 3.5 trips (N=50%)[1]	
125A	125	FERS3G0125	432318	FERS43G0125	432336	FERS4G0125	432369	FERS45G0125	432351
160A	160	FERS3J0160	432321	FERS43J0160	432339	FERS4J0160	432372	FERS45J0160	432354
250A	250	FERS3K0250	432327	FERS43K0250	432345	FERS4K0250	432378	FERS45K0250	432360

Selective Electronic Trip Unit (SMR1) with Switchable Rating Plug

	In (A)	3 pole 3 trips		4 pole 3 trips[1]		4 pole 4 trips[1]		4 pole 3.5 trips (N=50%)[1]	
50 kA FEN	160	FEN36SA160KJF	431730	FEN436SA160KJF	431817	FEN46SA160KJF	431928	FEN456SA160KJF	431877
	250	FEN36SA250KKF	431733	FEN436SA250KKF	431820	FEN46SA250KKF	431931	FEN456SA250KKF	431880
80 kA FEH	160	FEH36SA160KJF	431144	FEH436SA160KJF	431231	FEH46SA160KJF	431342	FEH456SA160KJF	431291
	250	FEH36SA250KKF	431147	FEH436SA250KKF	431234	FEH46SA250KKF	431345	FEH456SA250KKF	431294
150 kA FEL	160	FEL36SA160KJF	431437	FEL436SA160KJF	431524	FEL46SA160KJF	431635	FEL456SA160KJF	431584
	250	FEL36SA250KKF	431440	FEL436SA250KKF	431527	FEL46SA250KKF	431638	FEL456SA250KKF	431587

One code covers: A standard fixed front connection breaker + Toggle elongator + Breaker finishing covers + Fixation hardware

Complete Non-Automatic Circuit Breaker (Switch rated at 40°C)

	In (A)	3 pole		4 pole[1]	
FEY	250	FEY306D250KF	431991	FEY406D250KF	431997

One code covers: A standard fixed front connection breaker + Toggle elongator + Breaker finishing covers + Fixation hardware

(1) Neutral on the left. If neutral on the right is needed, please contact us

FE250 - Complete Circuit Breaker

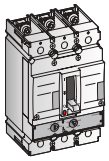

Line Thermal Magnetic LTM or LTMD (Settable Thermals cailbrated at 55°C)

		3 pole 3 trips	
	In (A)	Cat. no.	Ref. no.
36 kA FDS	125	FEV36T5A125KF	**431219**
	160	FEV36T5A160KF	**431220**
	200	FEV36T5A200KF	**431221**
	225	FEV36T5A225KF	**431222**
50kA FDN	100	FEN36T5D100KF	**431223**
	125	FEN36T5D125KF	**431224**
	160	FEN36T5D160KF	**431226**
	200	FEN36T5D200KF	**431229**
	225	FEN36T5D225KF	**431232**
80 kA FDH	100	FEH36T5D125KF	**431235**
	125	FEH36T5D125KF	**431235**
	160	FEH36T5D160KF	**431244**
	200	FEH36T5D200KF	**431245**
	225	FEH36T5D225KF	**431247**

One code covers: A standard, fixed front connection breaker + Fixation hardware

FE - Internal accessories

Contacts

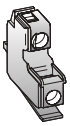

	Normally open		Normally closed			
	Cat. no.	Ref. no.	Cat. no.	Ref. no.	Cat. no.	Ref. no.
Aux. switch right mounted	FAS10R	**430837**	FAS01R	**430831**		
Aux. switch left mounted	FAS10L	**430834**	FAS01L	**430828**		
Bell alarm electronic trip unit	FABAT10	**430818**	FABAT01	**430815**		
Bell alarm thermal magnetic trip unit	FEBAT10	**430970**	FEBAT01	**430969**		
Bell alarm mechanism	FABAM10	**432003**	FABAM01	**432000**		
Bell alarm RCD device	FABAT10	**430818**	FABAT01	**430815**		

Releases

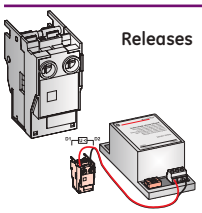

	Shunt		Undervoltage		Delayed undervoltage	
12V AC/DC	FASHTB	**430840**	FAUVRB	**431960**	-	-
24V AC/DC	FASHTD	**430843**	FAUVRD	**430861**	-	-
48V AC/DC	FASHTF	**430846**	FAUVRF	**430864**	-	-
60V AC/DC	FASHTH	**435118**	FAUVRH	**435120**	-	-
110 AC/DC	FASHTJ	**430849**	FAUVRJ	**430867**	-	-
220/240V AC/DC	FASHTN	**430852**	FAUVRN	**430870**	FAUVDN	**430858**
400/415V AC	FASHTU	**430855**	FAUVR8	**436472**	-	-
440/480V AC	-	-	FAUVRU	**430873**	-	-

FE - Operators

Electrical operators

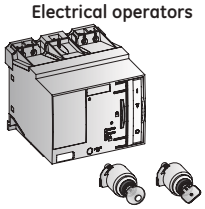

24V AC/DC	FEEMFD	**432052**
48V AC/DC	FEEMFF	**432055**
60V AC/DC	FEEMFH	**432058**
110/130V AC/DC	FEEMFJ	**432061**
220/250V AC/DC	FEEMFN	**432064**
400/440V AC	FEEMF8	**435812**
Keylock for electr. operator Ronis[1]	FE1BRE	**432012**
Keylock for electr. operator Profalux[1]	FE1BPE	**432011**

Rotary handles

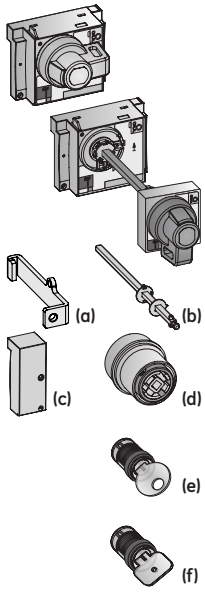

	Direct on device		Rotary handle through door or cover plate[2]		Panel or door mounted	
Grey	FENRF/5	**436495**	FENRC/5	**436491**	-	-
Red	FENRFV/5	**436496**	FENRCV/5	**436492**	-	-
Grey + Early closing Aux. Switches 2xNO[3]	-	-	FENRY/5	**436500**	-	-
Red + Early closing Aux. Switches 2xNO[3]	-	-	FENRYV/5	**436501**	-	-
Grey	-	-	-	-	FENRD/5	**436493**
Red	-	-	-	-	FENRDV/5	**436494**
Grey + Early closing Aux. Switches 2xNO[3]	-	-	-	-	FENRZ/5	**436502**
Red + Early closing Aux. Switches 2xNO[3]	-	-	-	-	FENRZV/5	**436503**

Accessories			
Flex oper. adaptor push to trip, set of 2 pcs. (a)	FENFT	**433531**	Only for use with panel or door mounted type
Extension shaft kit (max. 600 mm) (b)	FDNRE	**430986**	Only for use with panel or door mounted type
Side-by-side installation adapter kit (c)	FENR4	**432099**	Not for use with panel or door mounted type
Adaptor for drawout (d)	FENRW	**432120**	
Ronis keylock 1104B nr. BC 1027[1] (e)	FA1BR1	**430088**	
Ronis keylock 1104B nr. BC 1053[1] (e)	FA1BR2	**430089**	
Ronis keylock 1104B nr. BC 2932[1] (e)	FA1BR3	**430504**	
Ronis keylock 1104B nr. BC 2911[1] (e)	FA1BR4	**430505**	
Ronis keylock 1104B nr. BC 2936[1] (e)	FA1BR5	**430506**	
Ronis keylock 1104B nr. BC 2940[1] (e)	FA1BR6	**430507**	
Ronis lock with random key[1] (e)	FA1BRH	**430068**	
Profalux lock with random key[1] (f)	FA1BPH	**430813**	

FE - Residual current devices

RCD bottom mounted [4]

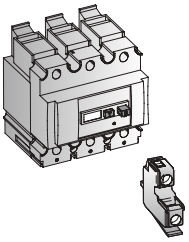

	3 pole		4 pole	
160A Voltage 220/440V AC	FEQDB3MJ/6	**431136**	FEQDB4MJ/6	**431159**
160A Voltage 400/690V AC	FEQDB3HJ/6	**431118**	FEQDB4HJ/6	**431145**
250A Voltage 220/440V AC	FEQDB3MK/6	**431139**	FEQDB4MK/6	**431161**
250A Voltage 400/690V AC	FEQDB3HK/6	**431124**	FEQDB4HK/6	**431151**

	Normally open		Normally closed	
Bell Alarm RCD device	FABAT10	**430818**	FABAT 01	**430815**

One code covers an RCD with: Fixation hardware + Sealable interconnection cover

(1) Key included
(2) Add door flange FDFH for door lock options
(3) On request 1xNO/1xNC is available.
(4) 100/200V AC execution available on request.

FE - Plug-in system

Main system

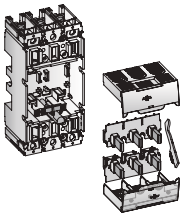

	3 pole		4 pole	
	Cat. no.	Ref. nr.	Cat. no.	Ref. nr.
Complete set for breaker	FEDDF3	**432034**	FEDDF4	**432037**
Fixed part for breaker	FEDFF3	**432040**	FEDFF4	**432043**
Mobile part for breaker	FEDMP3	**432046**	FEDMP4	**432049**
Fixed part for breaker & RCD	FEDFQ3	**430987**	FEDFQ4	**431842**
Mobile part for breaker & RCD	FEDMP3	**432046**	FEDMP4	**432049**

Complete set: Fixed and mobile part with connection and fixation hardware
Fixed part: Fixed base with connection and fixation hardware
Mobile part: Mechanism trip device, terminal shields and set of plugs

Auxiliary disconnects[1] (Secondary wiring)

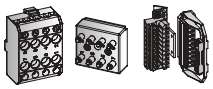

Complete set 8pole	FAPFM	**430824**
Fixed part 8 pole	FAPF8	**430823**
Mobile part 8 pole	FAPM8	**430826**
10 pole wired plug & socket for plug-in device	FAPPS	**430827**

Spares

Set of nutplates and connection bolts (For connection of bases used as spare)	FEJN3	**436467**	FEJN4	**436467**

FE- Drawout system

FE - Drawout system

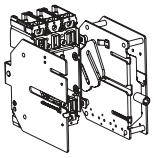

	3 pole		4 pole	
	Cat. no.	Ref. nr.	Cat. no.	Ref. nr.
Complete set for breaker Drawout system for behind door applications	FEWB3	**432538**	FEWB4	**432544**

Through Door mounting kits

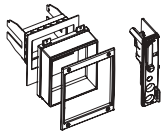

Through Door Adaption kit with padlocking and keylocking option[2]		
Toggle Operated	FEWT	**432580**
With Motor Operator	FEWM	**432583**
With Rotary Handle Type FENRC & FENRY	FEWN	**432586**
Adaption kit ONLY with padlocking and keylocking option on door Breaker operation behind door	FAWE	**432619**

Keylocks

Keylock for Drawout position RONIS 1104b[3]	FA1BRWD	**432613**
Keylock for Drawout position Profalux[3]	FA1BPWD	**432616**

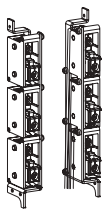

Position Indiaction

Set of 3 NO contacts (1 set per position)	FAS30W	**432607**
Set of 3 NO + NG contacts (1 set per position)	FAS33W	**432610**

Set of 3 NO+NC contacts

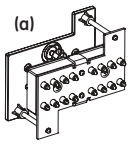

16 pole complete set for Drawout Breaker (a) (Secondary wiring)	FEWA2	**432589**

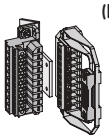

10 pole wired plug & socket for Plug-in or Drawout device (b)	FAPPS	**430827**

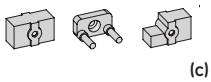

Rating adjustable interlock kit between fixed & Mobile parts (c)	FAPIP	**430825**

(1) Only necessary when internal accessories or an electrical operator are used (a maximum of two per FE frame size)
(2) Keylocks not included
(3) A maximum of two locks can be placed (with through door kits only)

FE - Connections: Optional

			3 pole		4 pole	
			Cat. no.	Ref. nr.	Cat. no.	Ref. nr.
Extenders[1]	Standard flat type	(a)	FEBES3	**432026**	FEBES4	**432027**
	Heightened type	(b)	FEBEH3	**432024**	FEBEH4	**432025**
	Twisted 90°	(c)	FEBEA3	**432022**	FEBEA4	**432023**
	Angled 45°	(d)	FEBE43	**432018**	FEBE44	**432019**
	Angled 90°	(e)	FEBE93	**432020**	FEBE94	**432021**
Spreader flat[1]	Pole spacing 45mm		FEBSS3	**432032**	FEBSS4	**432033**
Rear connections[1]	Set 3 pole (2 short, 1 long)		FEBRC3	**432028**	-	-
	Set 4 pole (2 short, 2 long)		-	-	FEBRC4	**432029**
	Set 3 pole (3 short)		FEBRCS3	**432190**	-	-
	Set 4 pole (4 short)		-	-	FEBRCS4	**432191**
			2,5 - 95mm²		**16 - 150mm²**	
Internal box clamps[1]	Box Clamp Cu/Al, set 3 pole		FETCA1316	**432156**	FETCA1320	**432157**
	Box Clamp Cu/Al, set 4 pole		FETCA1416	**432158**	FETCA1420	**432159**
			70 - 185mm²			
External box clamps[1]	Box Clamp Cu/Al, set 3 pole[2]		FETCA1323	**432160**		
	Box Clamp Cu/Al, set 4 pole[2]		FETCA1423	**432161**		
			6 copper cable cores 25mm² or 35 mm²			
External connectors[1]	Set 3 pole		FETCA630A	**880954**		
	Set 4 pole		FETCA640A	**880955**		

(1) Set for equipping the line OR load side of the breaker
(2) External box clamps are always delivered with standard extender

FE - Installation accessories

		3 pole		4 pole	
		Cat. no.	Ref. no.	Cat. no.	Ref. no.
Terminal shields (with finishing covers)					
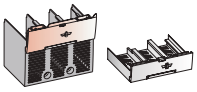	Long, set of 2 pcs.	FEJL3	**432079**	FEJL4	**432082**
	Short, set of 2 pcs.	FEJS3	**432088**	FEJS4	**432091**
Specific to connection area					
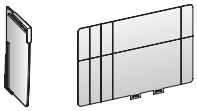	Phase separators, set of 12 pcs	FEJP	**432085**		
	Backplate set of 2 pcs (3 or 4 pole)	FEJB	**432073**		
Covers					
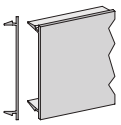	Cutout filler for cover plate (64 mm), length of 1.2 m	FBF6	**883970**		
Padlocking devices for toggle operator[1]					
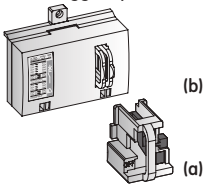	Padlocking removable (a)	FD1PR	**430879**		
	Padlocking fixed (b)	FE1PF	**432017**		
Circuit indication/coding					
	Set of 20 blank labels	FAC	**430821**		
Door flanges					
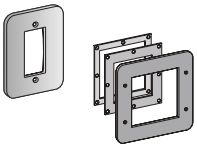	Breaker front face	FEFF3	**432067**	FEFF4	**432068**
	RCD unit front face for 3 and 4 pole	FDFF3	**430941**	FDFF3	**430941**
	Front face toggle area	FEFT	**432071**	FEFT	**432071**
	Rotary handle (through cover plate model)	FDFH	**430829**	FDFH	**430829**
	Motor operator	FEFE	**430943**	FDFE	**430843**
Spare parts					
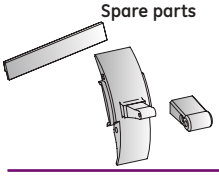	Finishing covers, set of 2 pcs.[2]	FEUA3	**432162**	FEUA4	**432163**
	Spare toggle (set of 5 pieces)	FEUT	**433540**	FEUT	**433540**

FE - Accessories electronic trip units

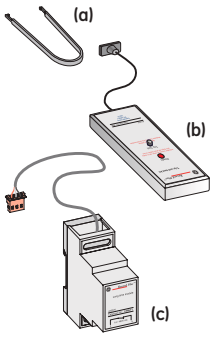

Rating plug tool	(a)	FAR	**433500**
Battery test device SMR1	(b)	FAZ	**431406**
Longtime module	(c)	FAMLT1	**433376**

(1) Padlocks not included
(2) Supplied with breakers, not with FEV type.

Notes

SMR1
Selective electronic protection.
SMR2
Modular electronic protection with enhanced functionality
Mag Break™
Magnetic Only protection
Y
Non Automatic or switch
(not mentioned in tables)

FG Frame

Breaking capacities

Icu 400/415V AC in kA eff.

Type	N	H	L
FG400	50	80	150
FG630	50	80	150

Protection

Trip Unit	Rated Current (A)	SMR1	SMR2	Mag Break™
	A			
FG400	250	N, H, L	N, H, L	N, H, L
	350	-	N, H, L	-
	400	N, H, L	N, H, L	N, H, L
FG630	400	N, H, L	N, H, L	-
	500	N, H, L	N, H, L	N, H, L
	630	N, H, L	N, H, L	-

Number of poles / protected poles (trips)			
3 pole 3 trips	N, H, L	N, H, L	N, H, L
4 pole 3 trips	N, H, L	N, H, L	N, H, L
4 pole 4 trips	N, H, L	N, H, L	-
4 pole 3.5 trips (N=50%)	N, H, L	N, H, L	-

Accessories (main types)

① Auxiliary contact left mounted (NO or NC) 1, 2 or 3pcs.
② Auxiliary contact right mounted (NO or NC) 1 or 2pcs.
③ Bell Alarm electronic trip unit (NO or NC)
④ Bell Alarm mechanism (NO or NC)
⑤ Shunt or Undervoltage release
⑤a Actuator for electronic trip unit.
⑥ Operators
Rotary handle
Electrical operator
⑦ Bottom mounted RCD (below trip unit)
(Insert indicates Bell alarm contact mounting)
⑧ Plug-in or draw-out system

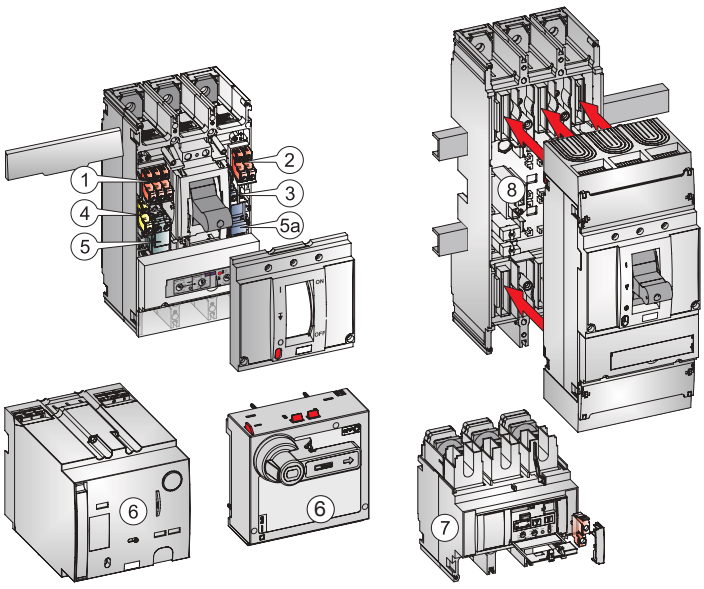

FG400 - Complete circuit breaker

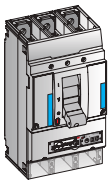

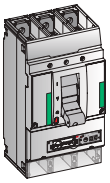

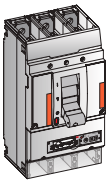

Selective Electronic Trip Unit (SMR1) without Rating Plug

	In (A)	3 pole Cat. no.	3 pole Ref. no.	4 pole[1] Cat. no.	4 pole[1] Ref. no.				
50kA FGN	250	FGN36AA250LKF	434248	FGN46AA250LKF	434253				
	400	FGN36AA400LLF	431455	FGN46AA400LLF	431536				
80kA FGH	250	FGH36AA250LKF	434232	FGH46AA250LKF	434237				
	400	FGH36AA400LLF	431032	FGH46AA400LLF	431106				
150kA FGL	250	FGL36AA250LKF	434240	FGL46AA250LKF	434245				
	400	FGL36AA400LLF	431246	FGL46AA400LLF	431330				

One code covers: A standard fixed front connection breaker + Assembled trip unit + Toggle Elongator + Breaker finishing covers + Fixation hardware

Type line 0.625 - 1 x In

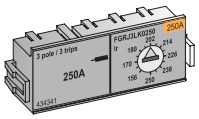

Adjustable Rating Plugs for Trip Units SMR1

	In (A)	3 pole 3 trips		4 pole 3 trips[1]		4 pole 4 trips[1]		4 pole 3.5 trips (N=50%)[1]	
250A	160	FGRJ3LK0160	434337	FGRJ43LK0160	434345	FGRJ4LK0160	434361	FGRJ45LK0160	434353
	250	FGRJ3LK0250	434341	FGRJ43LK0250	434349	FGRJ4LK0250	434365	FGRJ45LK0250	434357
400A	250	FGRJ3LL0250	435343	FGRJ43LL0250	435356	FGRJ4LL0250	435397	FGRJ45LL0250	435367
	400	FGRJ3LL0400	433151	FGRJ43LL0400	433163	FGRJ4LL0400	433187	FGRJ45LL0400	433175

Type line/Motor 0.4 - 1 x In

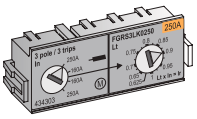

Switchable Rating Plugs for Trip Units SMR1

	In (A)	3 pole 3 trips		4 pole 3 trips[1]		4 pole 4 trips[1]		4 pole 3.5 trips (N=50%)[1]	
250A	250	FGRS3LK0250	434303	FGRS43LK0250	434307	FGRS4LK0250	434315	FGRS45LK0250	434311
400A	400	FGRS3LL0400	435435	FGRS43LL0400	434516	FGRS4LL0400	434537	FGRS45LL0400	434525

Selective Electronic Trip Unit (SMR1) with switchable Rating Plug

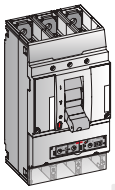

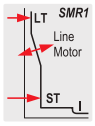

	In (A)	3 pole 3 trips		4 pole 3 trips[1]		4 pole 4 trips[1]		4 pole 3.5 trips (N=50%)[1]	
50kA FGN	250	FGN36SA250LKF	434249	FGN436SA250LKF	434251	FGN46SA250LKF	434254	FGN456SA250LKF	434252
	400	FGN36SA400LLF	434489	FGN436SA400LLF	435277	FGN46SA400LLF	435280	FGN456SA400LLF	434504
80kA FGH	250	FGH36SA250LKF	434233	FGH436SA250LKF	434235	FGH46SA250LKF	434238	FGH456SA250LKF	434236
	400	FGH36SA400LLF	434399	FGH436SA400LLF	434408	FGH46SA400LLF	434426	FGH456SA400LLF	434414
150kA FGL	250	FGL36SA250LKF	434241	FGL436SA250LKF	434243	FGL46SA250LKF	434246	FGL456SA250LKF	434244
	400	FGL36SA400LLF	434444	FGL436SA400LLF	434453	FGL46SA400LLF	434474	FGL456SA400LLF	434462

One code covers: A standard fixed front connection breaker + Assembled trip unit + Toggle elongator + Rating plug + Breaker finishing covers + Fixation hardware

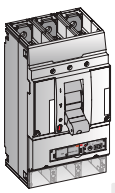

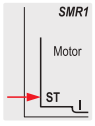

Selective Electronic Trip Unit (SMR1) with Rating Plug, without Overload (LT) protection

	In (A)	3 pole 3 trips		4 pole 3 trips[1]	
50kA FGN	400	FGN36BM400LLF	434687	FGN436BM400LLF	434693
80kA FGH	400	FGH36BM400LLF	434663	FGH436BM400LLF	434669
150kA FGL	400	FGL36BM400LLF	434675	FGL436BM400LLF	434681

One code covers: A standard fixed front connection breaker + Assembled trip unit + Toggle elongator + Rating plug + Breaker finishing covers + Fixation hardware

(1) Neutral on the left. If neutral on the right is needed, please contact us.

FG400 - Complete circuit breaker

Modular Electronic Trip Unit (SMR2) without Rating Plug

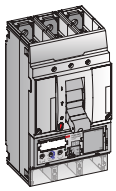

	In (A)	3 pole Cat. no.	3 pole Ref. no.	4 pole[1] Cat. no.	4 pole[1] Ref. no.	Cat. no.	Ref. no.	Cat. no.	Ref. no.
50kA FGN	250	FGN36KA250LKF	**434073**	FGN46KA250LKF	**436159**				
	350[2] ■	FGN36KA350LLF	**434483**	FGN46KA350LLF	**434510**				
	400	FGN36KA400LLF	**436156**	FGN46KA400LLF	**436160**				
80kA FGH	250	FGH36KA250LKF	**436150**	FGH46KA250LKF	**434041**				
	350[2] ■	FGH36KA350LLF	**434393**	FGH46KA350LLF	**434420**				
	400	FGH36KA400LLF	**436151**	FGH46KA400LLF	**434042**				
150kA FGL	250	FGL36KA250LKF	**434049**	FGL46KA250LKF	**436153**				
	350[2] ■	FGL36KA350LLF	**434438**	FGL46KA350LLF	**434468**				
	400	FGL36KA400LLF	**434050**	FGL46KA400LLF	**436154**				

One code covers: A standard fixed front connection breaker + Assembled trip unit + Toggle Elongator + Fillller for extension module and battery socket + Breaker finishing covers + Fixation hardware

LT: Ir = 0.625-1 x In
LTD: Line & Motor; 8 options

Adjustable LT & LTD settable Rating Plugs for Trip Units SMR2

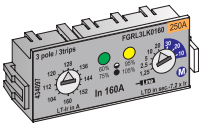

	In (A)	3 pole 3 trips		4 pole 3 trips[1]		4 pole 4 trips[1]		4 pole 3.5 trips (N=50%)[1]	
250A	160	FGRL3LK0160/7	**436749**	FGRL43LK0160 /7	**434469**	FGRL4LK0160/7	**434559**	FGRL45LK0160 /7	**434472**
	250	FGRL3LK0250/7	**436656**	FGRL43LK0250 /7	**434615**	FGRL4LK0250/7	**434562**	FGRL45LK0250 /7	**434481**
400A	250	FGRL3LL0250/7	**436747**	FGRL43LL0250 /7	**434599**	FGRL4LL0250/7	**434568**	FGRL45LL0250 /7	**434579**
	400	FGRL3LL0400/7	**436721**	FGRL43LL0400 /7	**434617**	FGRL4LL0400/7	**434584**	FGRL45LL0400 /7	**434482**
350[2] ■	350[2]	FGRL3LL0350/7	**436748**	FGRL43LL0350 /7	**434601**	FGRL4LL0350/7	**434582**	FGRL45LL0350 /7	**434596**

Modular Electronic Trip Unit (SMR2) with two adjustable Rating Plugs, setting 0.4 - 1 x In

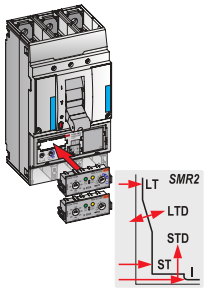

	In (A)	3 pole 3 trips		4 pole 3 trips[1]		4 pole 4 trips[1]		4 pole 3.5 trips (N=50%)[1]	
50kA FGN	400	FGN36VA400LLF	**435140**	FGN436VA400LLF	**435152**	FGN46VA400LLF	**435170**	FGN456VA400LLF	**435164**
80kA FGH	400	FGH36VA400LLF	**434953**	FGH436VA400LLF	**434960**	FGH46VA400LLF	**434983**	FGH456VA400LLF	**434971**
150kA FGL	400	FGL36VA400LLF	**435065**	FGL436VA400LLF	**435077**	FGL46VA400LLF	**435128**	FGL456VA400LLF	**435095**

One code covers: A standard fixed front connection breaker + Assembled trip unit + Toggle elongator +Two rating plugs + Fillller for extension module and battery socket + Breaker finishing covers + Fixation hardware

Extension modules for the SMR2 Electronic trip unit *Plug-in types replacing the filler module (1 pc max.)*

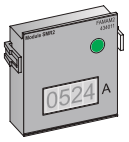

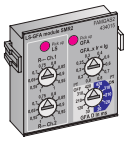

Ammeter with 4 digit LCD display	FAMAM2	**436183**
Groundfault alarm + Modbus communication (RTu)	FAMGAM2	**436185**
Groundfault alarm + 2 channel load shedding device	FAMGAS2	**436186**
Groundfault alarm + Fault type indicators	FAMGAT2	**436187**
Groundfault protection + Modbus communication (RTu)	FAMGFM2	**436188**
Groundfault protection + 2 channel load shedding device	FAMGFS2	**436189**
Groundfault protection + Fault type indicators	FAMGFT2	**436190**
2 channel load shedding device + Modbus communication (RTu)	FAMSM2	**436192**
2 channel load shedding device + Fault type indicators	FAMST2	**436197**
Fault type indicators + Modbus communication (RTu)	FAMMT2	**436191**
Spare filler module	FAMB2	**434448**

One code covers: A plug-in module and where needed connection hardware

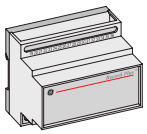

Other Modules

External communication and contact module (4 contacts, 1A/400V)[3]	FAMECM	**434013**

One code covers: Module and connection hardware

Non-Automatic Circuit Breaker (Switch rated at 40°C)

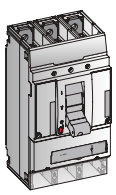

	In (A)	3 pole		4 pole[1]	
FGY	400	FGY306D400LF	**431659**	FGY406D400LF	**431671**

One code covers: A standard fixed front connection breaker + Assembled trip unit + Toggle elongator + Breaker finishing covers + Fixation hardware

(1) Neutral on the left. If neutral on the right is needed, please contact us.
(2) Specifically configured for Motor Protection
(3) Is needed for Modbus communication (1 per breaker).

FG630 - Complete circuit breaker

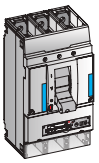
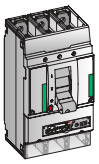
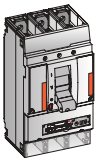

Selective Electronic Trip Unit (SMR1) without Rating Plug

		3 pole		4 pole[1]					
	In (A)	Cat. no.	Ref. no.	Cat. no.	Ref. no.	Cat. no.	Ref. no.	Cat. no.	Ref. no.
50kA FGN	400	FGN36AA400NLF	**434561**	FGN46AA400NLF	**434636**				
	500[2]	FGN36AA500NNF	**434812**	FGN46AA500NNF	**434866**				
	630	FGN36AA630NNF	**431461**	FGN46AA630NNF	**431539**				
80kA FGH	400	FGH36AA400NLF	**433142**	FGH46AA400NLF	**434432**				
	500[2]	FGH36AA500NNF	**434600**	FGH46AA500NNF	**434630**				
	630	FGH36AA630NNF	**431038**	FGH46AA630NNF	**431132**				
150kA FGL	400	FGL36AA400NLF	**434459**	FGL46AA400NLF	**434534**				
	500[2]	FGL36AA500NNF	**434645**	FGL46AA500NNF	**434770**				
	630	FGL36AA630NNF	**431249**	FGL46AA630NNF	**431333**				

One code covers: A standard fixed front connection breaker + Assembled trip unit + Toggle Elongator + Breaker finishing covers + Fixation hardware

Type line 0.625 - 1 x In

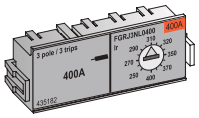

Adjustable Rating Plugs for Trip Units SMR1

	In (A)	3 pole 3 trips		4 pole 3 trips[1]		4 pole 4 trips[1]		4 pole 3.5 trips (N=50%)[1]	
400A	250	FGRJ3NL0250	**433148**	FGRJ43NL0250	**433160**	FGRJ4NL0250	**433184**	FGRJ45NL0250	**433172**
	400	FGRJ3NL0400	**435182**	FGRJ43NL0400	**435188**	FGRJ4NL0400	**435200**	FGRJ45NL0400	**435194**
630A	400	FGRJ3NN0400	**433154**	FGRJ43NN0400	**433166**	FGRJ4NN0400	**433190**	FGRJ45NN0400	**433178**
	630	FGRJ3NN0630	**433157**	FGRJ43NN0630	**433169**	FGRJ4NN0630	**433193**	FGRJ45NN0630	**433181**

Type line/Motor 0.4 - 1 x In

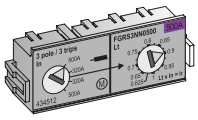

Switchable Rating Plugs for Trip Units SMR1

	In (A)	3 pole 3 trips		4 pole 3 trips[1]		4 pole 4 trips[1]		4 pole 3.5 trips (N=50%)[1]	
400A	400	FGRS3NL0400	**433235**	FGRS43NL0400	**433241**	FGRS4NL0400	**433253**	FGRS45NL0400	**433247**
500[2]	500	FGRS3NN0500	**434512**	FGRS43NN0500	**434521**	FGRS4NN0500	**434542**	FGRS45NN0500	**434530**

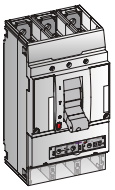

Selective Electronic Trip Unit (SMR1) with switchable Rating Plug

	In (A)	3 pole 3 trips		4 pole 3 trips[1]		4 pole 4 trips[1]		4 pole 3.5 trips (N=50%)[1]	
50kA FGN	400	FGN36SA400NLF	**431530**	FGN436SA400NLF	**431596**	FGN46SA400NLF	**431650**	FGN456SA400NLF	**431626**
	500	FGN36SA500NNF	**434835**	FGN436SA500NNF	**434848**	FGN46SA500NNF	**434884**	FGN456SA500NNF	**434860**
80kA FGH	400	FGH36SA400NLF	**431091**	FGH436SA400NLF	**431168**	FGH46SA400NLF	**431240**	FGH456SA400NLF	**431198**
	500	FGH36SA500NNF	**434612**	FGH436SA500NNF	**434621**	FGH46SA500NNF	**434642**	FGH456SA500NNF	**434627**
150kA FGL	400	FGL36SA400NLF	**431309**	FGL436SA400NLF	**431372**	FGL46SA400NLF	**431449**	FGL456SA400NLF	**431425**
	500	FGL36SA500NNF	**434657**	FGL436SA500NNF	**434758**	FGL46SA500NNF	**434806**	FGL456SA500NNF	**434764**

One code covers: A standard fixed front connection breaker + Assembled trip unit + Toggle elongator + Rating plug + Breaker finishing covers + Fixation hardware

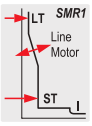

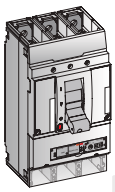

Selective Electronic Trip Unit (SMR1) with Rating Plug, without Overload (LT) protection

	In (A)	3 pole 3 trips		4 pole 3 trips[1]	
50kA FGN	500	FGN36BM500NNF	**434690**	FGN436BM500NNF	**434696**
80kA FGH	500	FGH36BM500NNF	**434666**	FGH436BM500NNF	**434672**
150kA FGL	500	FGL36BM500NNF	**434678**	FGL436BM500NNF	**434684**

One code covers: A standard fixed front connection breaker + Assembled trip unit + Toggle elongator + Rating plug + Breaker finishing covers + Fixation hardware

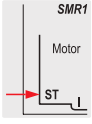

(1) Neutral on the left. If neutral on the right is needed, please contact us.
(2) Specifically configured for use with Switchable Rating Plug only.

FG630 - Complete circuit breaker

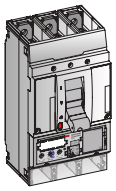

Modular Electronic Trip Unit (SMR2) without Rating Plug

	In (A)	3 pole Cat. no.	3 pole Ref. no.	4 pole[1] Cat. no.	4 pole[1] Ref. no.	Cat. no.	Ref. no.	Cat. no.	Ref. no.
50kA FGN	400	FGN36KA400NLF	**436157**	FGN46KA400NLF	**436161**				
	500[2] ■	FGN36KA500NNF	**434824**	FGN46KA500NNF	**434872**				
	630	FGN36KA630NNF	**436158**	FGN46KA630NNF	**434092**				
80kA FGH	400	FGH36KA400NLF	**436152**	FGH46KA400NLF	**434043**				
	500[2] ■	FGH36KA500NNF	**434606**	FGH46KA500NNF	**434633**				
	630	FGH36KA630NNF	**434028**	FGH46KA630NNF	**434044**				
150kA FGL	400	FGL36KA400NLF	**434051**	FGL46KA400NLF	**436155**				
	500[2] ■	FGL36KA500NNF	**434651**	FGL46KA500NNF	**434782**				
	630	FGL36KA630NNF	**434052**	FGL46KA630NNF	**434068**				

One code covers: A standard fixed front connection breaker + Assembled trip unit + Toggle Elongator + Fillller for extension module and battery socket + Breaker finishing covers + Fixation hardware

LT: Ir = 0.625-1 x In
LTD: Line & Motor; 8 options

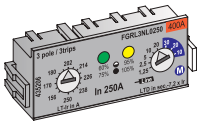

Adjustable LT & LTD settable Rating Plugs for Trip Units SMR2

	In (A)	3 pole 3 trips		4 pole 3 trips[1]		4 pole 4 trips[1]		4 pole 3.5 trips (N=50%)[1]	
400A	250	FGRL3NL0250/7	**436739**	FGRL43NL0250 /7	**434588**	FGRL4NL0250/7	**434492**	FGRL45NL0250 /7	**434592**
	400	FGRL3NL0400/7	**436746**	FGRL43NL0400 /7	**434590**	FGRL4NL0400/7	**434493**	FGRL45NL0400 /7	**434594**
630A	400	FGRL3NN0400/7	**436726**	FGRL43NN0400 /7	**434605**	FGRL4NN0400/7	**434496**	FGRL45NN0400 /7	**434581**
	630	FGRL3NN0630/7	**436722**	FGRL43NN0630 /7	**434622**	FGRL4NN0630/7	**434532**	FGRL45NN0630 /7	**434624**
500[2] ■	500[2]	FGRL3NN0500/7	**436738**	FGRL43NN0500 /7	**434607**	FGRL4NN0500/7	**434502**	FGRL45NN0500 /7	**434597**

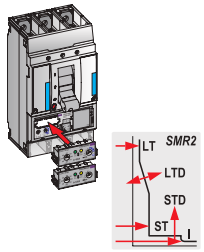

Modular ElectronicTrip Unit (SMR2) with two Adjustable Rating Plugs, setting 0.4 - 1 x In

	In (A)	3 pole 3 trips		4 pole 3 trips[1]		4 pole 4 trips[1]		4 pole 3.5 trips (N=50%)[1]	
50kA FGN	630	FGN36VA630NNF	**435146**	FGN436VA630NNF	**435158**	FGN46VA630NNF	**435176**	FGN456VA630NNF	**435167**
80kA FGH	630	FGH36VA630NNF	**434958**	FGH436VA630NNF	**434965**	FGH46VA630NNF	**435003**	FGH456VA630NNF	**434977**
150kA FGL	630	FGL36VA630NNF	**435071**	FGL436VA630NNF	**435091**	FGL46VA630NNF	**435134**	FGL456VA630NNF	**435122**

One code covers: A standard fixed front connection breaker + Assembled trip unit + Toggle elongator + Two rating plugs + Fillller for extension module and battery socket + Breaker finishing covers + Fixation hardware

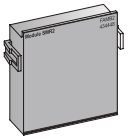

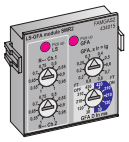

Extension modules for the SMR2 Electronic trip unit *Plug-in types replacing the filler module (1 pc max.)*

Ammeter with 4 digit LCD display	FAMAM2	**436183**
Groundfault alarm + Modbus communication	FAMGAM2	**436185**
Groundfault alarm + 2 channel load shedding device	FAMGAS2	**436186**
Groundfault alarm + Fault type indicators	FAMGAT2	**436187**
Groundfault protection + Modbus communication	FAMGFM2	**436188**
Groundfault protection + 2 channel load shedding device	FAMGFS2	**436189**
Groundfault protection + Fault type indicators	FAMGFT2	**436190**
2 channel load shedding device + Modbus communication	FAMSM2	**436192**
2 channel load shedding device + Fault type indicators	FAMST2	**436197**
Fault type indicators + Modbus communication	FAMMT2	**436191**
Spare filler module	FAMB2	**434448**

One code covers: A plug-in module and where needed connection hardware

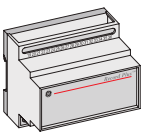

Other Modules

External communication and contact module (4 contacts, 1 A/400V)[3]	FAMECM	**434013**

One code covers: Module and connection hardware

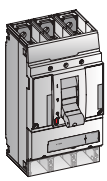

Non-Automatic Circuit Breaker (Switch rated at 40°C)

	In (A)	3 pole		4 pole[1]	
FGY	630	FGY306D630NF	**431665**	FGY406D630NF	**431687**

One code covers: A standard fixed front connection breaker + Assembled trip unit + Toggle elongator + Breaker finishing covers + Fixation hardware

(1) Neutral on the left. If neutral on the right is needed, please contact us.
(2) Specifically configured for Motor Protection.
(3) Is needed for Modbus communication (1 per breaker).

FG400 - Complete Circuit Breaker

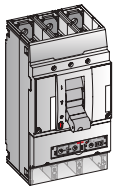

Selective Electronic Trip Unit (SMR1) with adjustable rating plug for use at 55 ° C

	In (A)	3 pole 3 trips Cat. no.	Ref. no.		3 pole 3 trips Cat. no.	Ref. no.
50 kA FGN	400	FGN36JA5400LLF	**431305**	80 kA FGH	FGH36JA5400LLF	**431303**

One code covers: A standard, fixed front connection breaker + Fixation hardware + Toggle Elongator + Adjustable Rating Plug

FG630 - Complete Circuit Breaker

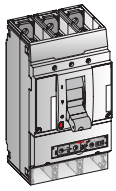

Selective Electronic Trip Unit (SMR1) with adjustable rating plug for use at 55 ° C

	In (A)	3 pole 3 trips Cat. no.	Ref. no.		3 pole 3 trips Cat. no.	Ref. no.
50 kA FGN	500	FGN36JA5500NNF	**431304**	80 kA FGH	FGH36JA5500NNF	**431301**

One code covers: A standard, fixed front connection breaker + Fixation hardware + Toggle Elongator + Adjustable Rating Plug

FG - Internal accessories

Contacts

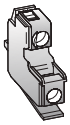

	Normally open		Normally closed			
	Cat. no.	Ref. no.	Cat. no.	Ref. no.	Cat. no.	Ref. no.
Aux. switch right mounted	FAS10R	**430837**	FAS01R	**430831**		
Aux. switch left mounted	FAS10L	**430834**	FAS01L	**430828**		
Bell alarm electronic trip unit	FABAT10	**430818**	FABAT01	**430815**		
Bell alarm mechanism	FABAM10	**432003**	FABAM01	**432000**		
Bell alarm RCD device	FABAT10	**430818**	FABAT01	**430815**		

Releases

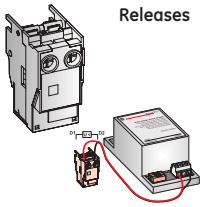

	Shunt		Undervoltage		Delayed undervoltage	
12V AC/DC	FASHTB	**430840**	FAUVRB	**431960**	-	-
24V AC/DC	FASHTD	**430843**	FAUVRD	**430861**	-	-
48V AC/DC	FASHTF	**430846**	FAUVRF	**430864**	-	-
60V AC/DC	FASHTH	**435118**	FAUVRH	**435120**	-	-
110 AC/DC	FASHTJ	**430849**	FAUVRJ	**430867**	-	-
220/240V AC/DC	FASHTN	**430852**	FAUVRN	**430870**	FAUVDN	**430858**
400/415V AC	FASHTU	**430855**	FAUVR8	**436472**	-	-
440/480V AC	-	-	FAUVRU	**430873**	-	-

FG - Operators

Electrical operators

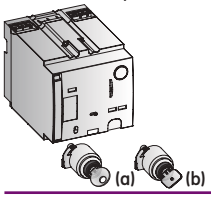

24V AC/DC	FGEMFD	**432817**
48V AC/DC	FGEMFF	**432820**
60V AC/DC	FGEMFH	**432823**
110/127V AC/DC	FGEMFJ	**432826**
220/250V AC/DC	FGEMFN	**432829**
400/440V AC	FGEMF8	**432811**
Keylock for electr. operator Ronis[1] (a)	FG1BRE	**431404**
Keylock for electr. operator Profalux[1] (b)	FG1BPE	**431403**

Rotary handles

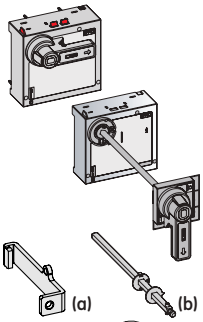

	Direct on device		Rotary handle through door or cover plate[2]		Panel or door mounted	
Grey	FGNRF/5	**436509**	FGNRC/5	**436504**	-	-
Red	FGNRFV/5	**436510**	FGNRCV/5	**436505**	-	-
Grey + Early closing Aux. Switches 2xNO[3]	-	-	FGNRY/5	**436513**	-	-
Red + Early closing Aux. Switches 2xNO[3]	-	-	FGNRYV/5	**436514**	-	-
Grey	-	-	-	-	FGNRD/5	**436506**
Red	-	-	-	-	FGNRDV/5	**436507**
Grey + Early closing Aux. Switches 2xNO[3]	-	-	-	-	FGNRZ/5	**436515**
Red + Early closing Aux. Switches 2xNO[3]	-	-	-	-	FGNRZV/5	**436516**

Accessories				
Flex operator adaptor push to trip (a)	FGNFT	**432867**	Only for use with panel or door mounted type	
Extension shaft kit (max. 600 mm) (b)	FGNRE	**434735**	Only for use with panel or door mounted type	
Adaptor for drawout (c)	FGNRW	**433892**		
Ronis keylock 1104B nr. BC 1027[1] (d)	FA1BR1	**430088**		
Ronis keylock 1104B nr. BC 1053[1] (d)	FA1BR2	**430089**		
Ronis keylock 1104B nr. BC 2932[1] (d)	FA1BR3	**430504**		
Ronis keylock 1104B nr. BC 2911[1] (d)	FA1BR4	**430505**		
Ronis keylock 1104B nr. BC 2936[1] (d)	FA1BR5	**430506**		
Ronis keylock 1104B nr. BC 2940[1] (d)	FA1BR6	**430507**		
Ronis lock with random key[1] (d)	FA1BRH	**430068**		
Profalux lock with random key[1] (e)	FA1BPH	**430813**		

FG - Residual current devices

RCD bottom mounted [4]

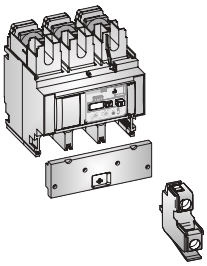

	3 pole		4 pole	
400/630A Voltage 200/440V AC	FGQDB3M/6	**431172**	FGQDB4M/6	**431181**
400/630A Voltage 400/690V AC	FGQDB3H/6	**431163**	FGQDB4H/6	**431175**

	Normally open		Normally closed	
Bell Alarm RCD device	FABAT10	**430818**	FABAT 01	**430815**

One code covers an RCD with: Fixation hardware + Sealable interconnection cover

(1) Key included
(2) Add door flange FGFH for door lock options
(3) On request 1xNO/1xNC is available.
(4) 100/200V AC execution available on request

FG - Plug-in system

Main system

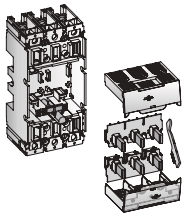

	3 pole		4 pole	
	Cat. no.	Ref. nr.	Cat. no.	Ref. nr.
Complete set for breaker	FGDDF3	**430944**	FGDDF4	**431064**
Fixed part for breaker	FGDFF3	**431983**	FGDFF4	**431986**
Mobile part for breaker	FGDMP3	**432796**	FGDMP4	**432799**

Complete set: Fixed and mobile part with connection and fixation hardware
Fixed part: Fixed base with connection and fixation hardware
Mobile part: Mechanism trip device, terminal shields and set of plugs

Auxiliary disconnects(1) (Secondary wiring)

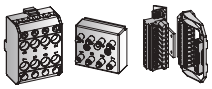

Complete set 8pole	FAPFM	**430824**		
Fixed part 8 pole	FAPF8	**430823**		
Mobile part 8 pole	FAPM8	**430826**		
10 pole wired plug & socket for plug-in device	FAPPS	**430827**		

Spares

Set of nutplates and connection bolts (For connection of bases used as spare)	FGJN3	**436469**	FGJN4	**436470**

FG- Drawout system

FE - Drawout system

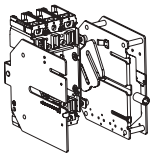

	3 pole		4 pole	
	Cat. no.	Ref. nr.	Cat. no.	Ref. nr.
Complete set for breaker Drawout system for behind door applications	FGWB3	**432550**	FGWB4	**432556**

Through Door mounting kits

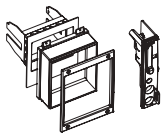

Through Door Adaption kit with padlocking and keylocking option(2)				
Toggle Operated	FGWT	**432592**		
With Motor Operator	FGWM	**432595**		
With Rotary Handle Type FGNRC & FGNRY	FGWN	**432598**		
Adaption kit ONLY with padlocking and keylocking option on door Breaker operation behind door	FAWE	**432619**		

Keylocks

Keylock for Drawout position RONIS 1104b(3)	FA1BRWD	**432613**		
Keylock for Drawout position Profalux(3)	FA1BPWD	**432616**		

Position Indiaction

Set of 3 NO contacts (1 set per position)	FAS30W	**432607**		
Set of 3 NO + NG contacts (1 set per position)	FAS33W	**432610**		

Set of 3 NO+NC contacts

(a)

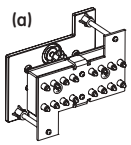

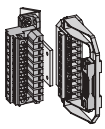

(b)

(c)

16 pole complete set for Drawout Breaker (a) (Secondary wiring)	FGWA2	**432601**		
24 pole complete set for Drawout Breaker (Secondary wiring)	FGWA3	**432604**		
10 pole wired plug & socket for Plug-in or Drawout device (b)	FAPPS	**430827**		
Rating adjustable interlock kit between fixed & Mobile parts (c)	FAPIP	**430825**		

(1) Only necessary when internal accessories or an electrical operator are used (a maximum of three per FG frame size)
(2) Keylocks not included
(3) A maximum of two locks can be placed (with through door kits only)

FG - Connections: optional

			3 pole		4 pole	
			Cat. no.	Ref. nr.	Cat. no.	Ref. nr.
Extenders	Standard flat type	(a)	FGBES3	**431696**	FGBES4	**431697**
	Heightened type	(b)	FGBEH3	**431691**	FGBEH4	**431695**
	Twisted 90° c	(c)	FGBEA3	**431686**	FGBEA4	**431690**
Spreader flat[1]	Pole spacing 70mm		FGBSS3	**431981**	FGBSS4	**431982**
Rear connections[1]	Set 3 pole (2 short, 1 long)		FGBRC3	**431701**		
	Set 4 pole (2 short, 2 long)				FGBRC4	**431702**
	Set 3 pole (3 short)		FGBRCS3	**432193**		
	Set 4 pole (4 short)				FGBRCS4	**432194**
			One cable 240 mm² or two cables 95 mm²		Two cables 1x300 mm² & 1x240 mm²	
Internal box clamps[1]	Box Clamp Cu/Al, set 3 pole		FGTCA1327	**435107**	FGTCA230B	**433412**
	Box Clamp Cu/Al, set 4 pole		FGTCA1427	**435116**	FGTCA240B	**433413**

(a) (b) (c)

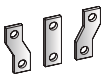

(1) Set for equipping the line OR load side of breaker.

FG - Installation accessories

		3 pole		4 pole	
		Cat. no.	Ref. no.	Cat. no.	Ref. no.
Terminal shields (with finishing covers)					
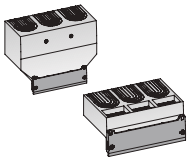	Long and widened type for spreaders and 690V applications, set of 2 pcs	FGJW3	**432861**	FGJW4	**432864**
	Medium, set of 2 pcs.	FGJM3	**432846**	FGJM4	**432849**
	Short, set of 2 pcs.	FGJS3	**432855**	FGJS4	**432858**
Specific to connection area					
	Phase separators, set of 12 pcs	FGJP	**432852**		
	Backplate (3 or 4pole), set of 2 pcs.	FGJB	**432840**		
Padlocking devices for toggle operator(1)					
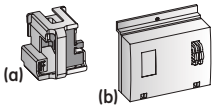 (a) (b)	Padlocking removable (a)	FG1PR	**431409**		
	Padlocking fixed (b)	FG1PF	**431408**		
Circuit indication / coding					
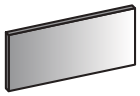	Set of 20 blank labels	FAC	**430821**		
Door flanges					
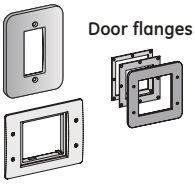	RCD unit front face for 3 and 4 pole	FDFF3	**430941**		
	Front face toggle area	FGFT	**432836**		
	Rotary handle (through cover plate model)	FGFH	**430545**		
	Motor operator	FGFE	**430544**		
Spare parts					
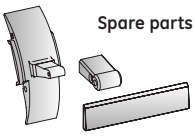		3 pole		4 pole	
	Finishing covers, set of 2 pcs.	FGUA3	**432908**	FGUA4	**432909**
	Spare toggle (set of 5 pcs.)	FGUT	**433541**	FGUT	**433541**

FG - Accessories electronic trip units SMR1 and SMR2

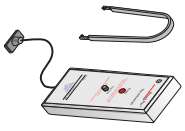 (a)	Rating plug tool (SMR1 & 2) (a)	FAR	**433500**		
	Battery test device (SMR1 & 2) (b)	FAZ	**431406**		
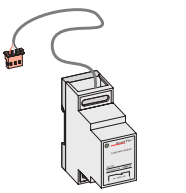 (b)	Long time module (SMR1 only) (c)	FAMLT1	**433376**		
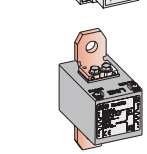 (c)	Ground Fault SMR2 Sensor 250A (d)	FGGS0250	**431870**		
	Ground Fault SMR2 Sensor 400A (d)	FGGS0400	**432838**		
(d)	Ground Fault SMR2 Sensor 630A (d)	FGGS0630	**432839**		

(1) Padlocks not included

FK Frame

Breaking capacities

Icu 400/415V AC in kA eff.

Type	V	N	H	L
FK800	50	50	80	100
FK1250	50	50	80	100
FK1600	50	50	80	

Protection

Trip Unit	Rated Current (A)	LTM	Mag Break™	SMR1e(1)	SMR1s(1)	SMR1g(1)
FK800	630	N, H, L	-	-	-	-
	800	N, H, L	N, H, L	N, H, L	N, H	N, H
FK1250	1000	N, H, L	-	N, H, L	N, H	N, H
	1250	N, H, L	N, H, L	N, H, L	N, H	N, H
FK1600	1600	-	-	N, H	N, H	N, H

Number of poles / protected poles (trips)					
3 pole 3 trips	N, H, L	N, H, L	N, H, L	N, H	N, H
4 pole 3 trips	N, H, L	N, H, L	-	-	-
4 pole 4 trips(1)	-	-	N, H, L	N, H	N, H

(1) Switchable, 0%, 50% or 100% neutral protection

LTM
Line thermal magnetic protection
SMR1e
Selective electronic protection.
SMR1s
Selective electronic protection with enhanced functionality
SMR1g
Selective electronic protection with enhanced functionality and ground fault
Mag Break™
Magnetic only breaker for motor protection
Y
Non Automatic or switch (not mentioned in tables)

Accessories (main types)

① A maximum of one Bell Alarm contact AND 3 aux. contacts (all of CO type)
② Shunt or Undervoltage release
③ Operators
Rotary handle
OR
Electrical operator
④ Draw-out system
⑤ Connectors for auxiliary wiring
⑥ RCD with separate sensor

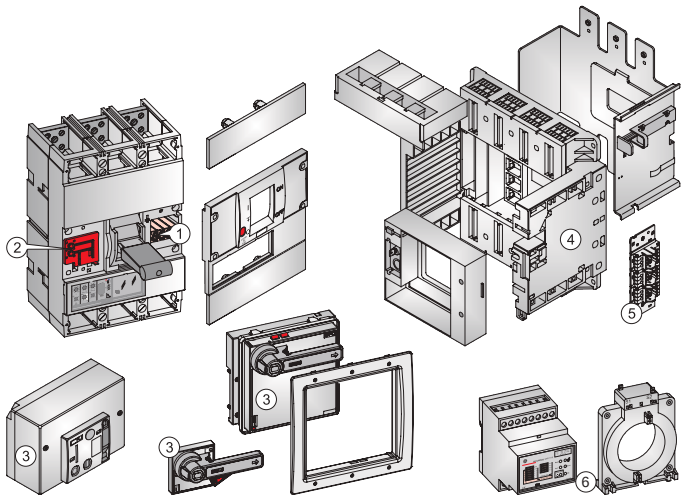

FK800 - Complete circuit breaker

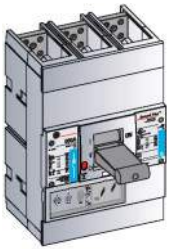

Selective Electronic Trip Unit with fixed time settings type SMR1e

	In (A)	3 pole 3 trips Cat. no.	3 pole 3 trips Ref. no.	4 pole[1] N selectable 0-50-100% Cat. no.	4 pole[1] N selectable 0-50-100% Ref. no.
50kA FKV	800	FKV36NE800PPF	435041	FKV46NE800PPF	435042
50kA FKN	800	FKN36NE800PPF	435393	FKN46NE800PPF	435447
80kA FKH	800	FKH36NE800PPF	435285	FKH46NE800PPF	435339
100kA FKL	800	FKL36NE800PPF	435390	FKL46NE800PPF	435282
	One code covers: A standard fixed front connection breaker + Assembled trip unit + Toggle Elongator + Breaker finishing covers + Fixation hardware				

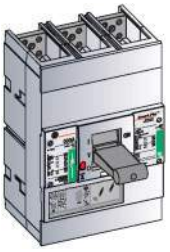

Selective Electronic Trip Unit with adjustable time settings type SMR1s

	In (A)	3 pole 3 trips		4 pole[1] N selectable 0-50-100%	
50kA FKN	800	FKN36NS800PPF	435429	FKN46NS800PPF	435483
80kA FKH	800	FKH36NS800PPF	435321	FKH46NS800PPF	435375
	One code covers: A standard fixed front connection breaker + Assembled trip unit + Toggle Elongator + Breaker finishing covers + Fixation hardware				

Selective Electronic Trip Unit with adjustable time settings and Groundfault type SMR1g

	In (A)	3 pole 3 trips		4 pole[1] N selectable 0-50-100%	
50kA FKN	800	FKN36NG800PPF	435411	FKN46NG800PPF	435465
80kA FKH	800	FKH36NG800PPF	435303	FKH46NG800PPF	435357
	One code covers: A standard fixed front connection breaker + Assembled trip unit + Toggle Elongator + Breaker finishing covers + Fixation hardware				

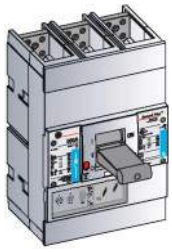

Line Thermal magnetic trip unit LTM (adjustable settings)

	In (A)	3 pole 3 trips		4 pole 3 trips[2]	
50kA FKV	800	FKV36NT800PF	435005	FKV46NT800PF	435064
50kA FKN	630	FKN36NT630PF	435444	FKN436NT630PF	435408
	800	FKN36NT800PF	435336	FKN436NT800PF	435300
80kA FKH	630	FKH36NT630PF	435426	FKH436NT630PF	435462
	800	FKH36NT800PF	435318	FKH436NT800PF	435354
100kA FKL	630	FKL36NT630PF	435480	FKL436NT630PF	435534
	800	FKL36NT800PF	435372	FKL436NT800PF	435535
	One code covers: A standard fixed front connection breaker + Assembled trip unit + Toggle Elongator + Breaker finishing covers + Fixation hardware				

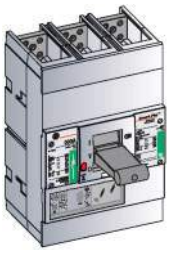

Motor Protection (Mag Break™) Magnetic Only Breaker

	In (A)	3 pole 3 trips		4 pole 3 trips[2]	
50kA FKN	800	FKN36NM800PF	435537	FKN436NM800PF	435541
80kA FKH	800	FKH36NM800PF	435538	FKH436NM800PF	435542
100kA FKL	800	FKL36NM800PF	435539	FKL436NM800PF	435543
	One code covers: A standard fixed front connection breaker + Assembled trip unit + Toggle Elongator + Breaker finishing covers + Fixation hardware				

(1) Switchable 0%, 50% or 100% neutral protection, neutral on left.
(2) Neutral on left

FK1250 - Complete circuit breaker

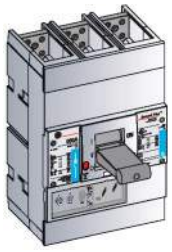

Selective Electronic Trip Unit with fixed time settings type SMR1e

	In (A)	3 pole 3 trips Cat. no.	3 pole 3 trips Ref. no.	4 pole[1] N selectable 0-50-100% Cat. no.	4 pole[1] N selectable 0-50-100% Ref. no.
50kA FKV	1000	FKV36NE100SQF	435040	FKV46NE100SQF	435066
	1250	FKV36NE125SSF	435035	FKV46NE125SSF	435083
	One code covers: A standard fixed front connection breaker - Assembled trip unit - fixation hardware (Electrical Operator not possible)				
50kA FKN	1000	FKN36NE100SQF	435396	FKN46NE100SQF	435450
	1250	FKN36NE125SSF	435384	FKN46NE125SSF	435438
80kA FKH	1000	FKH36NE100SQF	435288	FKH46NE100SQF	435342
	1250	FKH36NE125SSF	435276	FKH46NE125SSF	435330
100kA FKL	1000	FKL36NE100SQF	435545	FKL46NE100SQF	435547
	1250	FKL36NE125SSF	435546	FKL46NE125SSF	435549
	One code covers: A standard fixed front connection breaker + Assembled trip unit + Toggle Elongator + Breaker finishing covers + Fixation hardware				

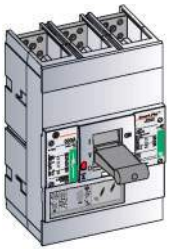

Selective Electronic Trip Unit with adjustable time settings type SMR1s

	In (A)	3 pole 3 trips Cat. no.	3 pole 3 trips Ref. no.	4 pole[1] N selectable 0-50-100% Cat. no.	4 pole[1] N selectable 0-50-100% Ref. no.
50kA FKN	1000	FKN36NS100SQF	435432	FKN46NS100SQF	435486
	1250	FKN36NS125SSF	435420	FKN46NS125SSF	435474
80kA FKH	1000	FKH36NS100SQF	435324	FKH46NS100SQF	435378
	1250	FKH36NS125SSF	435312	FKH46NS125SSF	435366
	One code covers: A standard fixed front connection breaker + Assembled trip unit + Toggle Elongator + Breaker finishing covers + Fixation hardware				

Selective Electronic Trip Unit with adjustable time settings and Groundfault type SMR1g

	In (A)	3 pole 3 trips Cat. no.	3 pole 3 trips Ref. no.	4 pole[1] N selectable 0-50-100% Cat. no.	4 pole[1] N selectable 0-50-100% Ref. no.
50kA FKN	1000	FKN36NG100SQF	435414	FKN46NG100SQF	435468
	1250	FKN36NG125SSF	435402	FKN46NG125SSF	435456
80kA FKH	1000	FKH36NG100SQF	435306	FKH46NG100SQF	435360
	1250	FKH36NG125SSF	435294	FKH46NG125SSF	435348
	One code covers: A standard fixed front connection breaker + Assembled trip unit + Toggle Elongator + Breaker finishing covers + Fixation hardware				

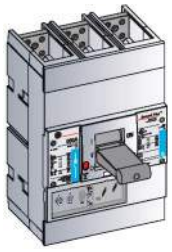

Line Thermal magnetic trip unit LTM (adjustable settings)

	In (A)	3 pole 3 trips Cat. no.	3 pole 3 trips Ref. no.	4 pole 3 trips[2] Cat. no.	4 pole 3 trips[2] Ref. no.
50kA FKV	1000	FKV36NT100SF	435028	FKV46NT100SF	435086
	1250	FKV36NT125SF	435030	FKV46NT125SF	435089
	One code covers: A standard fixed front connection breaker - Assembled trip unit - fixation hardware (Electrical Operator not possible)				
50kA FKN	1000	FKN36NT100SF	435550	FKN436NT100SF	435562
	1250	FKN36NT125SF	435551	FKN436NT125SF	435563
80kA FKH	1000	FKH36NT100SF	435553	FKH436NT100SF	435565
	1250	FKH36NT125SF	435554	FKH436NT125SF	435566
100kA FKL	1000	FKL36NT100SF	435555	FKL436NT100SF	435567
	1250	FKL36NT125SF	435557	FKL436NT125SF	435569
	One code covers: A standard fixed front connection breaker + Assembled trip unit + Toggle Elongator + Breaker finishing covers + Fixation hardware				

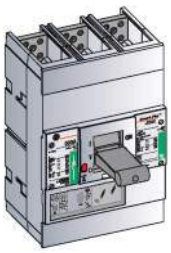

Motor Protection (Mag Break™) Magnetic Only Breaker

	In (A)	3 pole 3 trips Cat. no.	3 pole 3 trips Ref. no.	4 pole 3 trips[2] Cat. no.	4 pole 3 trips[2] Ref. no.
50kA FKN	1250	FKN36NM125SF	435558	FKN436NM125SF	435570
80kA FKH	1250	FKH36NM125SF	435559	FKH436NM125SF	435571
100kA FKL	1250	FKL36NM125SF	435561	FKL436NM125SF	435573
	One code covers: A standard fixed front connection breaker + Assembled dummy trip unit + Toggle elongator + Breaker finishing covers + Fixation hardware				

(1) Switchable 0%, 50% or 100% neutral protection, neutral on left.
(2) Neutral on left

FK1600 - Complete circuit breaker

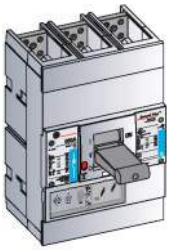

Selective Electronic Trip Unit with fixed time settings type SMR1e

	In (A)	3 pole 3 trips Cat. no.	3 pole 3 trips Ref. no.	4 pole(1) N selectable 0-50-100% Cat. no.	4 pole(1) N selectable 0-50-100% Ref. no.
50kA FKV	1600	FKV36NE160TTF	**435032**	FKV46NE160TTF	**435092**
	One code covers: A standard fixed front connection breaker - Assembled trip unit - fixation hardware (Electrical Operator not possible)				
50kA FKN	1600	FKN36NE160TTF	**435387**	FKN46NE160TTF	**435441**
80kA FKH	1600	FKH36NE160TTF	**435279**	FKH46NE160TTF	**435333**
	One code covers: A standard fixed front connection breaker + Assembled trip unit + Toggle Elongator + Breaker finishing covers + Fixation hardware				

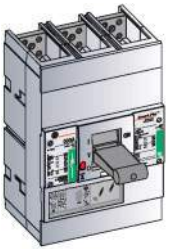

Selective Electronic Trip Unit with adjustable time settings type SMR1s

	In (A)	3 pole 3 trips Cat. no.	3 pole 3 trips Ref. no.	4 pole(1) N selectable 0-50-100% Cat. no.	4 pole(1) N selectable 0-50-100% Ref. no.
50kA FKN	1600	FKN36NS160TTF	**435423**	FKN46NS160TTF	**435477**
80kA FKH	1600	FKH36NS160TTF	**435315**	FKH46NS160TTF	**435369**
	One code covers: A standard fixed front connection breaker + Assembled trip unit + Toggle Elongator + Breaker finishing covers + Fixation hardware				

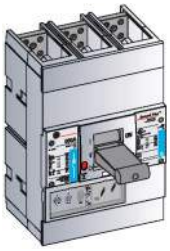

Selective Electronic Trip Unit with adjustable time settings and Groundfault type SMR1g

	In (A)	3 pole 3 trips Cat. no.	3 pole 3 trips Ref. no.	4 pole(1) N selectable 0-50-100% Cat. no.	4 pole(1) N selectable 0-50-100% Ref. no.
50kA FKN	1600	FKN36NG160TTF	**435405**	FKN46NG160TTF	**435459**
80kA FKH	1600	FKH36NG160TTF	**435297**	FKH46NG160TTF	**435351**
	One code covers: A standard fixed front connection breaker + Assembled trip unit + Toggle Elongator + Breaker finishing covers + Fixation hardware				

FKY- Non-Automatic circuit breaker (Switch)

	In (A)	3 pole Cat. no.	3 pole Ref. no.	4 pole(2) Cat. no.	4 pole(2) Ref. no.
FKY	800	FKY306DN800PF	**435495**	FKY406DN800PF	**435504**
	1000	FKY306DN100SF	**435381**	FKY406DN100SF	**435273**
	1250	FKY306DN125SF	**435489**	FKY406DN125SF	**435498**
	1600	FKY306DN160TF	**435492**	FKY406DN160TF	**435501**
	One code covers: A standard fixed front connection breaker + Assembled dummy trip unit + Toggle elongator + Breaker finishing covers + Fixation hardware				

(1) Switchable 0%, 50% or 100% neutral protection, neutral on left.
(2) Neutral on left

FK - Internal accessories

Contacts

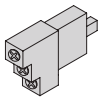

	Changeover					
	Cat. no.	Ref. no.	Cat. no.	Ref. no.	Cat. no.	Ref. no.
Aux. switch right mounted CO	FNS11R	**436401**				
Bell alarm contact right mounted CO	FNBA11R	**435761**				

Releases

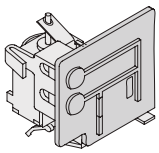

	Shunt		Undervoltage		Delayed undervoltage	
24V AC/DC	FNSHTD	**435693**	-	-	-	-
24 V AC	-	-	FNUVR1	**435698**	-	-
24 V DC	-	-	FNUVRD	**435701**	-	-
48 V AC/DC	FNSHTF	**435694**	-	-	-	-
48V /DC	-	-	FNUVRF	**435702**	-	-
110/130V AC/DC	FNSHTJ	**435695**	-	-	-	-
230V AC	-	-	FNUVR6	**435699**	-	-
220/240V AC - 220/2450V DC	FNSHTN	**435696**	-	-	-	-
400V AC	-	-	FNUVR8	**435700**	-	-
380/440V AC/DC	FNSHT8	**435692**	-	-	-	-
230V AC	-	-	-	-	FNUVD6	**435697**

FK - Operators

Electrical operators

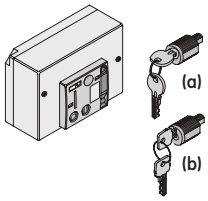

		Field Mountable Standard model for FK800 & FK1250		Field Mountable Standard model for FK1600		Factory fitted "HI-Speed closing" Model	
24V AC/DC						FNEMFD/M	**436322**
24V AC		FKMF1P	**436880**	FKF1S	**436884**		
48V AC/DC						FNEMFF/M	**436321**
48V AC		FKMF2P	**436881**	FKF2S	**436885**		
110V AC		FKMF3P	**436882**	FKF3S	**436886**	FNEMF3/M	**436323**
110V DC						FNEMFJ/M	**436458**
230V AC		FKMF6P	**436883**	FKF6S	**436887**	FNEMF6/M	**436324**
230V DC		-	-	-	-	FNEMFN/M	**436459**
Field Mounting kit for operatars[4]							
For three pole breakers		FKUE3	**434801**	FKUE3	**434801**	-	-
For four pole breakers		FKUE4	**434802**	FKUE4	**434802**	-	-
Ronis key lock[1]	(a)	FN1BRE	**435679**	FN1BRE	**435679**	FN1BRE	**435679**
Profalux key lock[1]	(b)	FN1BPE	**435678**	FN1BPE	**435678**	FN1BPE	**435678**

Rotary handles

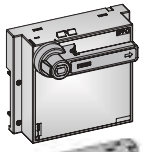

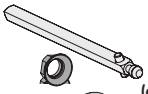

		Direct on device		Rotary handle through door or cover plate[2]		Panel or door mounted	
Grey		FNNRF/5	**436522**	FNNRC/5	**436517**	-	-
Red		FNNRFV/5	**436524**	FNNRCV/5	**436518**	-	-
Grey + Early closing aux. switches 2xNO[3]		-	-	FNNRY/5	**436527**	-	-
Red + Early closing aux. switches 2xNO[3]		-	-	FNNRYV/5	**436528**	-	-
Grey		-	-	-	-	FNNRD/5	**436519**
Red		-	-	-	-	FNNRDV/5	**436520**
Grey + Early closing aux. switches 2xNO[3]		-	-	-	-	FNNRZ/5	**436530**
Red + Early closing aux. switches 2xNO[3]		-	-	-	-	FNNRZV/5	**436531**
Accessories							
Extension shaft kit (max. 600 mm)	(a)	FNNRE	**435738**	Only for use with panel or door mounted type			
Adaptor for drawout	(b)	FNNRW	**435745**				
Ronis keylock 1104B nr. BC 1027[1]	(c)	FA1BR1	**430088**				
Ronis keylock 1104B nr. BC 1053[1]	(c)	FA1BR2	**430089**				
Ronis keylock 1104B nr. BC 2932[1]	(c)	FA1BR3	**430504**				
Ronis keylock 1104B nr. BC 2911[1]	(c)	FA1BR4	**430505**				
Ronis keylock 1104B nr. BC 2936[1]	(c)	FA1BR5	**430506**				
Ronis keylock 1104B nr. BC 2940[1]	(c)	FA1BR6	**430507**				
Ronis lock with random key[1]	(c)	FA1BRH	**430068**				
Profalux lock with random key[1]	(d)	FA1BPH	**430813**				

(1) Key included
(2) Add door flange FGFH for door lock options
(3) On request 1xNO/1xNC is available.
(4) Kit must be orderd for each field mounted motor operator.

FK - Residual current devices

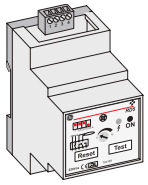

Relay	IΔn	Operating voltage	Settable delay	Nr. of modules	Cat. no.	Ref. no.	Pack.
RD5	0,03 ... 1A	110V AC	0 - 1 s	3	RD5 110	**704175**	1
	0,03 ... 1A	220V AC	0 - 1 s	3	RD5 220	**704169**	1
	0,03 ... 1A	380V AC	0 - 1 s	3	RD5 380	**704176**	1
RD6	0,2 ... 5A	110V AC	0,5 - 5 s	3	RD6 110	**704178**	1
	0,2 ... 5A	220V AC	0,5 - 5 s	3	RD6 220	**704177**	1
	0,2 ... 5A	380V AC	0,5 - 5 s	3	RD6 380	**704179**	1
RD1D	0,01 ... 5A	110V AC	0 - 3 s	3	RD1D 110	**872225**	1
	0,01 ... 5A	220/230V AC	0 - 3 s	3	RD1D 220	**872224**	1
	0,01 ... 5A	380/400V AC	0 - 3 s	3	RD1D 380	**872226**	1
Frame allowing front mounting of RD5, RD6 and RD1D types					RDFR	**872227**	1

Sensor

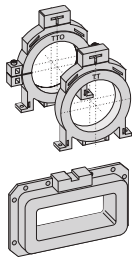

Sensor	Ø internal (mm) (internal opening)	A		Cat. no.	Ref. no.	Pack.
Round	22	125	closed	TTD 22	**560090**	1
	35	125	closed	TT 35	**872754**	1
	60	160	closed	TT 60	**872755**	1
	80	160	closed	TT 80	**872756**	1
	110	250	closed	TT 110	**872757**	1
	160	400	closed	TT 160	**872758**	1
	210	630/800	closed	TT 210	**872759**	1
	60	160	open	TTO 60	**872760**	1
	110	250	open	TTO 110	**872761**	1
	210	630/800	open	TTO 210	**872762**	1
Rectangular	70x175	-	closed	BTR 175	**704154**	1
	115x305	-	closed	BTR 305	**704155**	1
	130x350	-	closed	BTR 350	**704156**	1

FK - Draw-out system

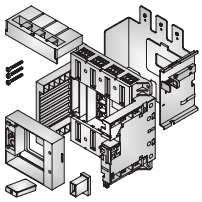

Main system

	3 pole		4 pole	
Model with front connection				
Complete set for FK800	FNWS3WP	**433434**	FNWS4WP	**436481**
Complete set for FK1250 & FK1600	FNWS3WT	**436482**	FNWS4WT	**433442**
Model with rear connection				
Complete set for FK800	FNWS3AP	**433436**	FNWS4AP	**433440**
Complete set for FK1250 & FK1600	FNWS3AT	**435757**	FNWS4AT	**435759**
One code covers the fixed and withdrawable portion of the drawout system, a doorframe with extended toggle operator, mounting accessories and fixation hardware.				

Auxiliary disconnects (Sec. wiring)

Complete set 6 pole	FNPFM	**435758**		

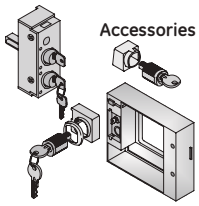

Accessories

Kit for mounting two keylocks on Chassis with one type Ronis 1104A lock[1]	FN1BRW1	**435575**		
Provision for 1 extra keylock on Chassis type Ronis 1104A[1]	FN1BRW2	**435577**		
Position Indication Contact 1 X CO, for withdrawn and/or plugged in position.	FNS11L	**435760**		
Spare doorframe for Drawout type	FNFW	**435578**		
Provision for first keylock in doorframe type Ronis 1104A[1]	FN1BRY1	**433415**		
Provision for second keylock in doorframe type Ronis 1104A[1]	FN1BRY2	**435574**		

FK - Connections: optional

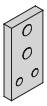

Terminal extenders[2]

	3 pole		4 pole	
Flat FK800 - FK1250	FNBES3P	**435706**	FNBES4P	**435707**
Flat FK1250 -FK 1600	FNBES3R	**433420**	FNBES4R	**433422**

Terminal spreader flat[2]

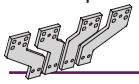

Flat FK800 - FK1250	FNBSS3P	**435708**	FNBSS4P	**435711**
Flat FK1250 -FK 1600	FNBSS3R	**435710**	FNBSS4R	**435712**

Rear connections[2]

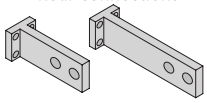

Set 3 pole (2 short, 1 long)	FNBRC3	**433423**	-	-
Set 4 pole (2 short, 2 long)	-	-	FNBRC4	**433425**
Set 3 pole (3 short)	FNBRCS3	**433426**	-	-
Set 4 pole (4 short)	-	-	FNBRCS4	**433427**

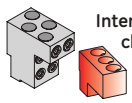

Internal box clamps[2]

Box Clamp Cu/Al, for 3 x 70-240 sq.mm.	FNTCA3327	**436316**	FNTCA3427	**436651**
Box Clamp Cu/Al, for 4 x 70-240 sq.mm.	FNTCA4327	**433438**	FNTCA4427	**433439**

(1) Key included
(2) Set for equipping the line OR load side of breaker.

FK - Installation Accessories

		3 pole		4 pole	
		Cat. no.	Ref. no.	Cat. no.	Ref. no.
Terminal shields (with finishing covers)					
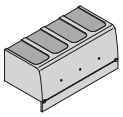	Long, set of 2 pcs.	FNJL3	**435716**	FNJL4	**435719**
Specific to connection area	**Phase separators**				
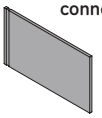	Set of 12 pcs for rear connected breaker	FNJP	**435722**		
	Set of 12 pcs for front connected breaker	FNJF	**434804**		
Padlocking devices for toggle operator(1)	Padlocking removable	FN1PR	**433417**		
Circuit indication / coding	Set of 20 blank labels	FAC	**430821**		
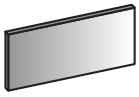					
Door flanges	**For FK frame in Fixed version**				
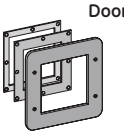	Toggle area	FNFT	**435715**		
	Rotary Handle Operator (Through Door Model)	FNFH	**435714**		
	Motor Operator	FNFE	**435713**		
Spare parts	Finishing covers (set of 2 pieces)	FNUA3	**435762**	FNUA4	**435763**
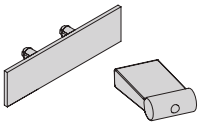	Spare toggle (set of 5 pieces)	FNUT	**435764**		

FK - Accessories electronic trip units

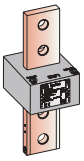	Sensor 800A for Ground fault device	FNGS0800	**433419**		
	Sensor 1000A for Ground fault device	FNGS1000	**433421**		
	Sensor 1250A for Ground fault device	FNGS1250	**435709**		
	Sensor 1600A for Ground fault device	FNGS1600	**436471**		
	TESTKIT				
	Pc driven digital testkit for trip units type SMR1e, s & g (2)	FKZD	**434803**		

(1) Padlocks not included
(2) For use with USB jack on Windows PC's.

Notes

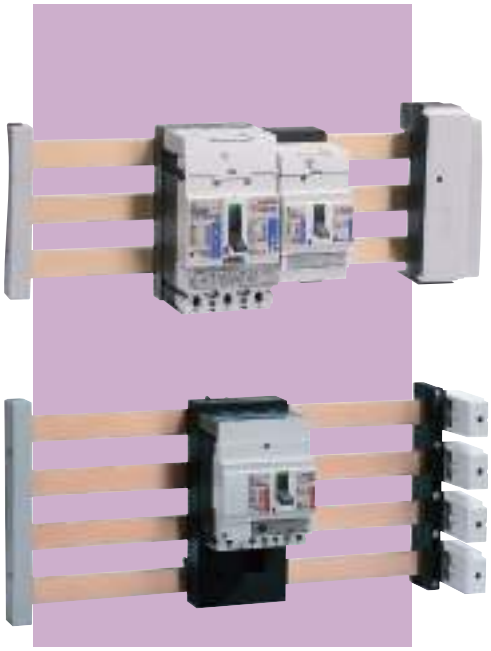

Standards

EN 60439-1

VDE 0660 Teil 500

Connectivity

Record Plus™ Breaker types

Adaptor type	Breaker types				
FBAD	FDE 160A	FDS 160A	FDN 160A	FDH 160A	FDL 160A
FBAE		FEV 160/250A	FEN 160/250A	FEH 160/250A	FEL 160/250A

Icu (kA) at 400/415V AC					
	25	36	50	80	150

Busbar types and Ratings

Busbar Size	In in A	Icw (kA) at 400/415V AC 1 second rating(1)		
20 x 5	**250A**	16.7	to	19.9
20 x 10	**450A**	17.6	to	23.8
30 x 5	**400A**	22.4	to	27.6
30 x 10	**630A**	23.3	to	30

Short-circuit rating of the full system with mounted breakers = The indicated breaking capacity (Icu) of ***Record Plus™*** MCCB's

(1) Depending on support spacing (see page C.16)

① Busbar support
② Busbars (not part of offering)
③ Connection set
④ Lateral connection set
⑤ Support cover
⑥ Adaptor FD
⑦ Adaptor FE
⑧ Busbar covers
⑨ Trim/Cover plate filler

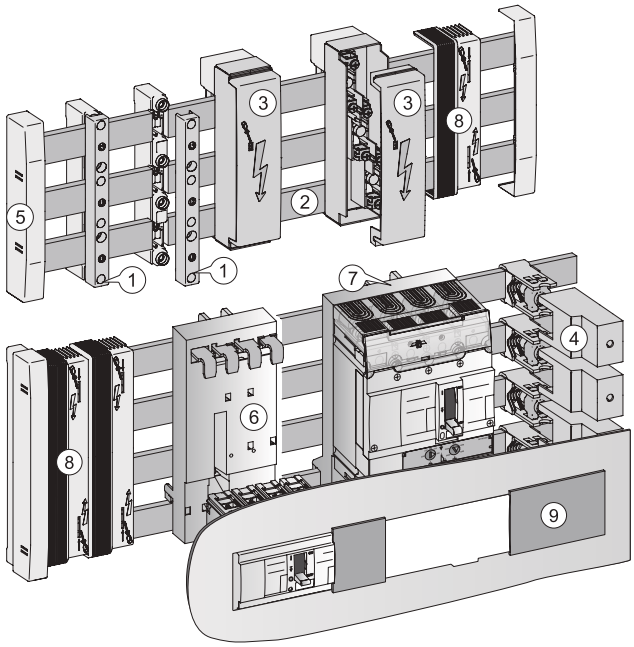

Connectivity system with 60mm spacing; three and four pole

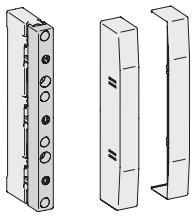

Busbar supports

	3 pole		4 pole	
	Cat. no.	Ref. no.	Cat. no.	Ref. no.
Set of left and right	FBB3S	**433458**	FBB4S	**433464**
Endplate covers, pair of	FBB3E	**433455**	FBB4E	**433461**

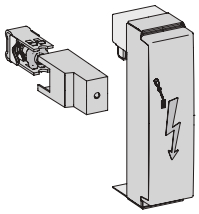

Connections

	Incoming from side		Incoming from front	
1 pole for lateral bar, flexible bar or cable connection Cu/Al 35-240 mm^2 for busbar section 5 mm	FBTS1L12	**433468**	-	-
1 pole for lateral bar, flexible bar or cable connection Cu/Al 35-300 mm^2 for busbar section 10 mm	FBTS10L12	**433474**	-	-
3 pole set for conductors 1.5 to 70mm^2	-	**-**	FBTF3L12	**433456**
4 pole set for conductors 1.5 to 70mm^2	-	**-**	FBTF4L12	**433497**

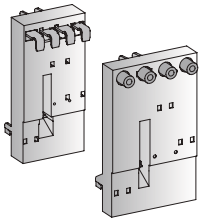

Adaptors

	3 pole		4 pole	
FD frame 160A	FBAD3	**433443**	FBAD4	**433446**
FE frame 250A	FBAE3	**433449**	FBAE4	**433452**

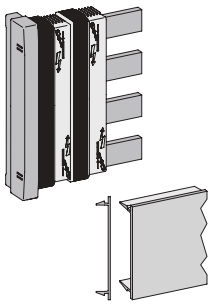

Installation

Busbar cover adjustable 3pole	FBCI3	**433377**
Busbar cover adjustable 4pole	FBCI4	**433444**
Filler for cover plate cut out of 64mm l=1.2m	FBF6	**883970**

Interlocking Breakers

Electrical

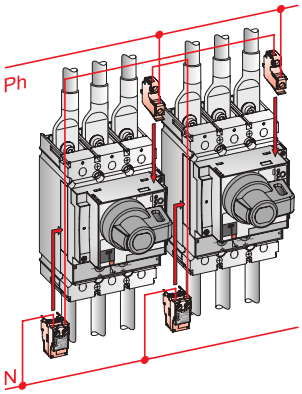

System with early action contacts in rotary handle and coils in both breakers(1)

Main Device N (left) FE160/250	Main Device N (left) FG400/630	Main Device N (left) FK800/1600	Secondary Device R (right) FE160/250	Secondary Device R (right) FG400/630	Secondary Device R (right) FK800/1600	Required main components (Listed protection devices are breakers or switches order codes can be found on: FE160: page A.13, FE250: page A.16, FG400: page A.25, FG630: page A.27, FK800: page A.35, FK1250: page A.36, FK1600: page A.37)	Can be combined with Option 1 or 2 Cat. no.	Ref. no.	Qty
x			x			Rotary handle, grey, through door or panel type FE with 1 NO and 1 NC contact	FENRX/5	**436499**	2
						Shunt release in mains device	F- - - - -	**4 - - - -**	1
						Undervoltage release in secondary device	F- - - - -	**4 - - - -**	1
	x			x		Rotary handle, grey, through door or panel type FG with 1 NO and 1 NC contact	FGNRX/5	**436512**	2
						Shunt release in mains device	F- - - - -	**4 - - - -**	1
						Undervoltage release in secondary device	F- - - - -	**4 - - - -**	1
	x			x		Rotary handle, grey, through door or panel type FG with 1 NO and 1 NC contact	FGNRX/5	**436512**	1
						Rotary handle, grey, through door or panel type FE with 1 NO and 1 NC contact	FENRX/5	**436499**	1
						Shunt release in mains device	F- - - - -	**4 - - - -**	1
						Undervoltage release in secondary device	F- - - - -	**4 - - - -**	1
		x			x	Rotary handle, grey, through door or panel type FK with 1 NO and 1 NC contact	FNNRX/5	**436526**	2
						Shunt release in mains device	F- - - - -	**4 - - - -**	1
						Undervoltage release in secondary device	F- - - - -	**4 - - - -**	1
		x			x	Rotary handle, grey, through door or panel type FK with 1 NO and 1 NC contact	FNNRX/5	**436526**	1
						Rotary handle, grey, through door or panel type FG with 1 NO and 1 NC contact	FGNRX/5	**436512**	1
						Shunt release in mains device	F- - - - -	**4 - - - -**	1
						Undervoltage release in secondary device	F- - - - -	**4 - - - -**	1

(1) Also applicable for combinations of three breakers.

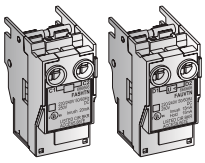

Shunt release for breaker/switch

	FE & FG type		FK type	
24V AC/DC	FASHTD	**430843**	FNSHTD	**435693**
110/130V AC/DC	FASHTJ	**430849**	FNSHTJ	**435695**
220/240V AC 250V DC	FASHTN	**430852**	FNSHTN	**435696**

Undervoltage release for breaker/switch

	FE & FG type		FK type	
24V AC/DC	FAUVRD	**430861**	-	-
24V AC	-	-	FNUVR1	**435698**
24V DC	-	-	FNUVRD	**435701**
110/130V AC/DC	FAUVRJ	**430867**	FNUVRJ	**437018**
220/240V AC 250V DC	FAUVRN	**430870**	-	-
230V AC	-	-	FNUVR6	**435699**

Mechanical

System with walking beam

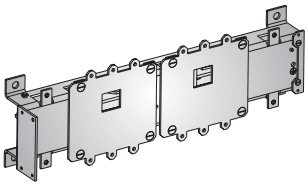

Main Device N (left) FE160/250	Main Device N (left) FG400/630	Main Device N (left) FK800/1600	Secondary Device R (right) FE160/250	Secondary Device R (right) FG400/630	Secondary Device R (right) FK800/1600	Required components: Listed protection devices are breakers or switches order codes can be found on: FE 160: page A.13, FE 250: page A.16, FG 400: page A.25, FG 630: page A.27, FK 800: page A.35, FK1250: page A.36, FK1600: page A.37	Option 1 Cat. no.	Ref. no.	Qty
x			x			Mechanical interlock 2 FE frame breakers	FE1I2	437001	1
	x			x		Mechanical interlock 2 FG frame breakers	FG1I2	437005	1
	x		x			Mechanical interlock 1 FG & 1 FE frame breakers	FG1I4	437009	1
		x			x	Mechanical interlock 2 FK frame breakers	FN1I2F	433416	1
		x		x		Mechanical interlock 1 FK & 1 FG frame breaker	FN1I4F	437016	1

System with rotary handles, 1 key and two locks (Ronis 1104)(1)

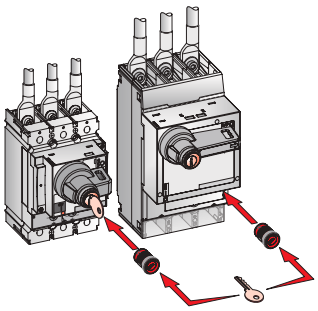

Main Device N (left) FE160/250	Main Device N (left) FG400/630	Main Device N (left) FK800/1600	Secondary Device R (right) FE160/250	Secondary Device R (right) FG400/630	Secondary Device R (right) FK800/1600	Required components: Listed protection devices are breakers or switches order codes can be found on: FE 160: page A.13, FE 250: page A.16, FG 400: page A.25, FG 630: page A.27, FK 800: page A.35, FK1250: page A.36, FK1600: page A.37	Option 2 Cat. no.	Ref. no.	Qty
x			x			Rotary handle, grey, through door or panel type FE	FENRC/5	436491	2
						Ronis keylock	FA1BR --	430 - - -	2
	x			x		Rotary handle, grey, through door or panel type FG	FGNRC/5	436504	1
						Ronis keylock	FA1BR --	430 - - -	2
	x		x			Rotary handle, grey, through door or panel type FE	FENRC/5	436491	1
						Rotary handle, grey, through door or panel type FG	FGNRC/5	436504	1
						Ronis keylock	FA1BR --	430 - - -	2
		x			x	Rotary handle, grey, through door or panel type FK	FNNRC/5	436517	1
						Ronis keylock	FA1BR --	430 - - -	2
		x		x		Rotary handle, grey, through door or panel type FK	FNNRC/5	436517	1
						Rotary handle, grey, through door or panel type FG	FGNRC/5	436504	1
						Ronis keylock	FA1BR --	430 - - -	2

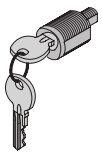

Keylocks type Ronis 1104 with key			
Ronis keylock 1104B nr. BC 1027	FA1BR1	430088	One type only
Ronis keylock 1104B nr. BC 1053	FA1BR2	430089	
Ronis keylock 1104B nr. BC 2932	FA1BR3	430504	
Ronis keylock 1104B nr. BC 2911	FA1BR4	430505	
Ronis keylock 1104B nr. BC 2936	FA1BR5	430506	
Ronis keylock 1104B nr. BC 2940	FA1BR6	430507	

Applications

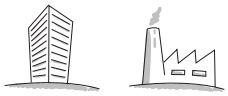

Residual current devices with separate sensors

RD5, RD6 and RD1D

Function

RCD Relay
The relay part of the RCD device is a DIN-rail mounted device containing the electronics and the setting area. On receipt of a signal from the sensor two contacts are operated.

Sensor
Placed around the phase and neutral current paths it detects the vectorial sum of the current in the circuit. When this sum is no longer zero, a signal is sent to the connected RCD relay.
The connection between the relay and the sensor should be as short as possible, the maximum circuit resistance may not exceed 30 Ohm.
If the lead length is longer than 5 meters and/or the sensitivity is adjusted to values < 0.5A the use of screened cables and earthed screening is recommended.
The same recommendation applies in cases where the sensor is installed in an environment where strong magnetic fields occur.
For high nominal currents or high sensitivities the cables must be centered within the sensor.
The use of an oversized sensor and/or reduced cable cross sections not centraly passing within the sensor could result in inaccurate readings.

Characteristics

RCD Relay
- Complies with EN 50082 & EN 60730
- For sinusoidal and pulsating earth leakages
- Test button and reset (memory clean) button
- Permanent working signal (green) and tripping signal (red) by means of LED
- Adjustable time delay (except 30mA) by means of potentiometer
- Two output contacts, one potential free
- Automatic test feature of the combination relay/sensor is provided
- On disconnection of the sensor, the relay trips
- Plug-in terminal block
- Width: 3 modules of 18 mm
- For installation in modular enclosures, DIN-rail mounted

Sensor
- Accuracy: 3/10,000 of the phase current (TTO type 1/10,000)
- Frequency: from 4 to 400Hz
- Sealable cover terminals
- For use with the relay types RD1D, RD5 and RD6 as described here. Also applicable for use with the reconnection relay RRC1 and RRC2 (see seperate publications)

Dimensions ● pg G.33

	RD5	RD6	RD1D
Operating voltage	110; 220; 380/400V 50/60Hz ±15%	110; 220; 380/400V 50/60Hz ±15%	110; 220; 380/400V 50/60Hz ±15%
Power consumption	2.5VA	2.5VA	2.5VA
Sensitivity settings	0.03 ; 0.3 ; 0.5 ; 1A	0.2 ; 0.5 ; 2 ; 5A	0.01 - 5A in steps of 10mA
Setting method	Dipswitches	Dipswitches	Digital with LCD display
Frequency	50/60Hz	50/60Hz	50/60Hz
Time delay adjustment (1)	0 - 1 second	0.5 - 5 seconds	0 - 3 seconds in steps of 50ms
Tripping time 30mA type	1x IdN<50ms - 5 x Idn<35ms	1x IdN<50ms - 5 x Idn<35ms	1x IdN<50ms - 5 x Idn<35ms
Tripping threshold	75% of set sensitivity value	75% of set sensitivity value	75% of set sensitivity value
Pre Alarm at 50% setting	----	----	Contact settable at 50% Idn
Contact ratings	5A / 230V	5A / 230	5A / 230V
Operating temperature	- 20 to + 50°C	- 20 to + 50°C	- 20 to + 50°C
Terminal capacity	2.5 mm^2; plug-in terminal box	2.5 mm^2; plug-in terminal box	2.5 mm^2; plug-in terminal box

(1) Time setting ALWAYS disabled when 30mA setting is chosen.

RD range differential relay

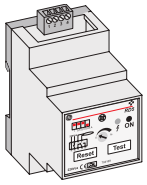

	IΔn	Operating voltage	Settable delay	Nr. of modules	Cat. no.	Ref. no.	Pack.
RD5	0,03 ... 1A	110V AC	0 - 1 s	3	RD5 110	**704175**	1
	0,03 ... 1A	220/230V AC	0 - 1 s	3	RD5 220	**704169**	1
	0,03 ... 1A	380/400V AC	0 - 1 s	3	RD5 380	**704176**	1
RD6	0,2 ... 5A	110V AC	0,5 - 5 s	3	RD6 110	**704178**	1
	0,2 ... 5A	220/230V AC	0,5 - 5 s	3	RD6 220	**704177**	1
	0,2 ... 5A	380/400V AC	0,5 - 5 s	3	RD6 380	**704179**	1
RD1D	0,01 ... 5A	110V AC	0 - 3 s	3	RD1D 110	**872225**	1
	0,01 ... 5A	220/230V AC	0 - 3 s	3	RD1D 220	**872224**	1
	0,01 ... 5A	380/400V AC	0 - 3 s	3	RD1D 380	**872226**	1

Sensor

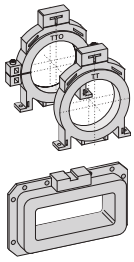

	Ø internal (mm) (internal opening)	A		Cat. no.	Ref. no.	Pack.
Round	22	125	closed	TTD 22	**560090**	1
	35	125	closed	TT 35	**872754**	1
	60	160	closed	TT 60	**872755**	1
	80	160	closed	TT 80	**872756**	1
	110	250	closed	TT 110	**872757**	1
	160	400	closed	TT 160	**872758**	1
	210	630/800	closed	TT 210	**872759**	1
	60	160	open	TTO 60	**872760**	1
	110	250	open	TTO 110	**872761**	1
	210	630/800	open	TTO 210	**872762**	1
Rectangular	70x175	-	closed	BTR 175	**704154**	1
	115x305	-	closed	BTR 305	**704155**	1
	130x350	-	closed	BTR 350	**704156**	1

Accessories

	Cat. no.	Ref. no.	Pack.
Through Panel/Door mounting kit for relay with DIN -rail, mounting hardware and doorflange.	RDFR	**872227**	1

Wiring Diagram

When the Shunt Release in the Record Plus Breaker or Switch is connected to point 11 and point 12 of the release is supplied by the relay. (Voltage rating = Phase Neutral Voltage of the network)

Alternately points 13, 14 & 15 can be used allowing the use of a Shunt or Undervoltage release of a different voltage rating.

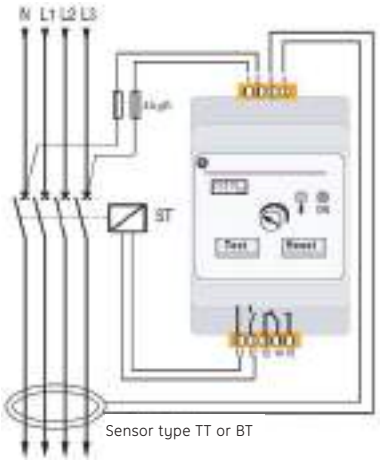

Sensor type TT or BT

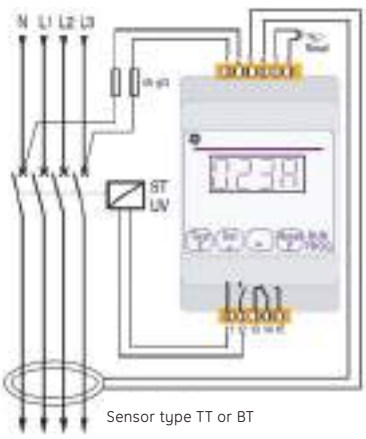

Sensor type TT or BT

FE160 - Circuit breaker in components

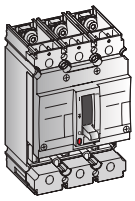

Breaker frames: Without trip unit

	In (A)	3 pole Cat. no.	3 pole Ref. no.	4 pole Cat. no.	4 pole Ref. no.	Cat. no.	Ref. no.	Cat. no.	Ref. no.
50kA FEN	160	FEN306F160JF	431712	FEN406F160JF	431799				
80kA FEH	160	FEH306F160JF	431126	FEH406F160JF	431213				
150kA FEL	160	FEL306F160JF	431419	FEL406F160JF	431506				

One code covers: A standard fixed front connection breaker + Toggle elongator + Breaker finishing covers + Fixation hardware

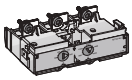

Trip units: Line Thermal Magnetic (adjustable settings)

	In (A)	3 pole 3 trips		4 pole 3 trips(1)		4 pole 4 trips(1)		4 pole 3.5 trips (N=50%)(1)	
LTM	25	FETTA3J0025	432546	FETTA43J0025	432391	FETTA4J0025	432636	-	-
	32	FETTA3J0032	432549	FETTA43J0032	432394	FETTA4J0032	432639	-	-
	40	FETTA3J0040	432552	FETTA43J0040	432397	FETTA4J0040	432642	-	-
	50	FETTA3J0050	432555	FETTA43J0050	432400	FETTA4J0050	432645	-	-
	63	FETTA3J0063	432558	FETTA43J0063	432403	FETTA4J0063	432648	FETTA45J0063	432603
	80	FETTA3J0080	432561	FETTA43J0080	432406	FETTA4J0080	432651	FETTA45J0080	432606
	100	FETTA3J0100	432564	FETTA43J0100	432409	FETTA4J0100	432654	FETTA45J0100	432609
	125	FETTA3J0125	432567	FETTA43J0125	432412	FETTA4J0125	432657	FETTA45J0125	432612
	160	FETTA3J0160	432570	FETTA43J0160	432582	FETTA4J0160	432660	FETTA45J0160	432615

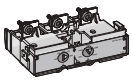

Trip units: Selective Thermal Magnetic (adjustable settings)

	In (A)	3 pole 3 trips		4 pole 3 trips(1)		4 pole 4 trips(1)		4 pole 3.5 trips (N=50%)(1)	
LTMD	100	FETTD3J0100	433159	FETTD43J0100	433201	FETTD4J0100	433269	FETTD45J0100	433231
	125	FETTD3J0125	433164	FETTD43J0125	433204	FETTD4J0125	433272	FETTD45J0125	433234
	160	FETTD3J0160	433168	FETTD43J0160	433207	FETTD4J0160	433275	FETTD45J0160	433239

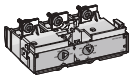

Trip units: Generator Thermal Magnetic

	In (A)	3 pole 3 trips		4 pole 3 trips(1)		4 pole 4 trips(1)		4 pole 3.5 trips (N=50%)(1)	
GTM	100	FETTG3J0100	433296	FETTG43J0100	433311	FETTG4J0100	433332	FETTG45J0100	433326
	125	FETTG3J0125	432693	FETTG43J0125	432717	FETTG4J0125	432774	FETTG45J0125	432741
	160	FETTG3J0160	432696	FETTG43J0160	432720	FETTG4J0160	432777	FETTG45J0160	432744

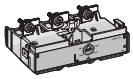

Trip units: Mag Break™, Magnetic only type for motor protection

	In (A)	3 pole 3 trips		4 pole 3 trips(1)	
MC	12.5	FETMC3J0012	432495	-	-
	20	FETMC3J0020	432498	-	-
	30	FETMC3J0030	434736	-	-
	50	FETMC3J0050	432501	FETMC43J0050	432528
	80	FETMC3J0080	436078	-	-
	100	FETMC3J0100	432504	FETMC43J0100	432531
	125	FETMC3J0125	436358	FETMC43J0125	436359
	160	FETMC3J0160	432510	FETMC43J0160	432537

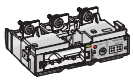

Trip units: Selective Electronic type without Rating Plug

	In (A)	3 pole		4 pole(1)	
SMR1	25	FETAA3J0025	432414	FETAA4J0025	432432
	63	FETAA3J0063	432417	FETAA4J0063	432435
	125	FETAA3J0125	432420	FETAA4J0125	432438
	160	FETAA3J0160	432423	FETAA4J0160	432441

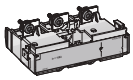

Trip units: Dummy for non Automatic Circuit Breaker (Switch)

	In (A)	3 pole		4 pole(1)	
Y	160	FETD30J0160	432480	FETD40J0160	432486

(1) Neutral on the left. If neutral on the right is needed, please contact us

FE250 - Circuit breaker in components

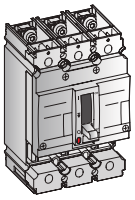

Breaker frames: Without trip unit

	In (A)	3 pole Cat. no.	3 pole Ref. no.	4 pole Cat. no.	4 pole Ref. no.	Cat. no.	Ref. no.	Cat. no.	Ref. no.
50kA FEN	250	FEN306F250KF	431715	FEN406F250KF	431802				
80kA FEH	250	FEH306F250KF	431129	FEH406F250KF	431216				
150kA FEL	250	FEL306F250KF	431422	FEL406F250KF	431509				

One code covers: A standard fixed front connection breaker + Toggle elongator + Breaker finishing covers + Fixation hardware

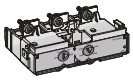

Trip units: Selective Thermal Magnetic (adjustable settings)

	In (A)	3 pole 3 trips		4 pole 3 trips(1)		4 pole 4 trips(1)		4 pole 3.5 trips (N=50%)(1)	
LTMD	125	FETTD3K0125	433182	FETTD43K0125	433216	FETTD4K0125	433284	FETTD45K0125	433252
	160	FETTD3K0160	433186	FETTD43K0160	433219	FETTD4K0160	433287	FETTD45K0160	433257
	200	FETTD3K0200	433191	FETTD43K0200	433222	FETTD4K0200	433290	FETTD45K0200	433260
	250	FETTD3K0250	433195	FETTD43K0250	433225	FETTD4K0250	433293	FETTD45K0250	433263

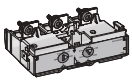

Trip units: Generator Thermal Magnetic

	In (A)	3 pole 3 trips		4 pole 3 trips(1)		4 pole 4 trips(1)		4 pole 3.5 trips (N=50%)(1)	
GTM	160	FETTG3K0160	432705	FETTG43K0160	432729	FETTG4K0160	432786	FETTG45K0160	432753
	200	FETTG3K0200	432708	FETTG43K0200	432732	FETTG4K0200	432789	FETTG45K0200	432756
	250	FETTG3K0250	432711	FETTG43K0250	432735	FETTG4K0250	432792	FETTG45K0250	432759

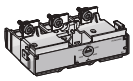

Trip units: Mag Break™, Magnetic only type for motor protection

	In (A)	3 pole 3 trips		4 pole 3 trips(1)	
MC	160	FETMC3K0160	432513	FETMC43K0160	432540
	200	FETMC3K0200	436778	FETMC43K0200	436779
	250	FETMC3K0250	432516	FETMC43K0250	432543

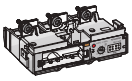

Trip units: Selective Electronic type without Rating Plug

	In (A)	3 pole		4 pole(1)	
SMR1	125	FETAA3K0125	432004	FETAA4K0125	432007
	160	FETAA3K0160	432426	FETAA4K0160	432444
	250	FETAA3K0250	432429	FETAA4K0250	432447

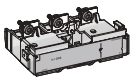

Trip units: Dummy for non Automatic Circuit Breaker (Switch)

	In (A)	3 pole		4 pole(1)	
Y	250	FETD30K0250	432483	FETD40K0250	432489

(1) Neutral on the left. If neutral on the right is needed, please contact us.

FG400 - Circuit breaker in components

Breaker frame without Trip Unit

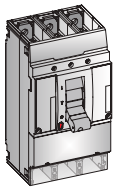

	In (A)	3 pole Cat. no.	3 pole Ref. no.	4 pole[1] Cat. no.	4 pole[1] Ref. no.				
50kA FGN	250	FGN306F250LF	434247	FGN406F250LF	434250				
	400	FGN306F400LF	431473	FGN406F400LF	431548				
80kA FGH	250	FGH306F250LF	434231	FGH406F250LF	434234				
	400	FGH306F400LF	431050	FGH406F400LF	431150				
150kA FGL	250	FGL306F250LF	434239	FGL406F250LF	434242				
	400	FGL306F400LF	431261	FGL406F400LF	431351				
One code covers: A standard fixed front connection breaker with current sensors + Toggle Elongator + Breaker finishing covers + Fixation hardware									

Selective Electronic Trip Unit (SMR1) without Rating Plug

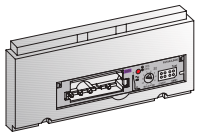

	In (A)	3 pole Cat. no.	3 pole Ref. no.	4 pole[1] Cat. no.	4 pole[1] Ref. no.		
SMR1	250	FGTAA3L0250	434319	FGTAA4L0250	434323	Long time protection	Adj. Ir= 0.4 - 1 x In
	400	FGTAA3L0400	431718	FGTAA4L0400	431742	Two long time delay bands (with choice of protection mode)	Line, no phase loss protection Motor with phase loss protection
						Short time protection	Adj. 2 - 13 x Ir (current dependant delay)[2]
						Instantaneous protection	Fixed 14 x Is[2]

Type line 0.625 - 1 x In

Adjustable Rating Plugs for Trip Units SMR1

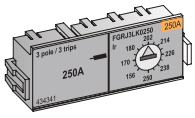

	In (A)	3 pole 3 trips Cat. no.	3 pole 3 trips Ref. no.	4 pole 3 trips[1] Cat. no.	4 pole 3 trips[1] Ref. no.	4 pole 4 trips[1] Cat. no.	4 pole 4 trips[1] Ref. no.	4 pole 3.5 trips (N=50%)[1] Cat. no.	4 pole 3.5 trips (N=50%)[1] Ref. no.
250A	160	FGRJ3LK0160	434337	FGRJ43LK0160	434345	FGRJ4LK0160	434361	FGRJ45LK0160	434353
	250	FGRJ3LK0250	434341	FGRJ43LK0250	434349	FGRJ4LK0250	434365	FGRJ45LK0250	434357
400A	250	FGRJ3LL0250	435343	FGRJ43LL0250	435356	FGRJ4LL0250	435397	FGRJ45LL0250	435367
	400	FGRJ3LL0400	433151	FGRJ43LL0400	433163	FGRJ4LL0400	433187	FGRJ45LL0400	433175

Type line/Motor 0.4 - 1 x In

Switchable Rating Plugs for Trip Units SMR1

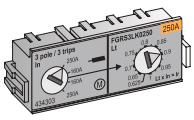

	In (A)	3 pole 3 trips Cat. no.	3 pole 3 trips Ref. no.	4 pole 3 trips[1] Cat. no.	4 pole 3 trips[1] Ref. no.	4 pole 4 trips[1] Cat. no.	4 pole 4 trips[1] Ref. no.	4 pole 3.5 trips (N=50%)[1] Cat. no.	4 pole 3.5 trips (N=50%)[1] Ref. no.
250A	250	FGRS3LK0250	434303	FGRS43LK0250	434307	FGRS4LK0250	434315	FGRS45LK0250	434311
400	400	FGRS3LL0400	435435	FGRS43LL0400	434516	FGRS4LL0400	434537	FGRS45LL0400	434525

Modular Electronic Trip Unit (SMR2) without Rating Plug

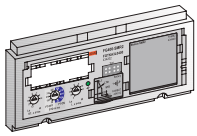

	In (A)	3 pole Cat. no.	3 pole Ref. no.	4 pole[1] Cat. no.	4 pole[1] Ref. no.		
SMR2	250	FGTKA3L0250	434201	FGTKA4L0250	434205	4 for line, no phase loss protection	Adj. Ir= 0.4 - 1 x In
	350[3]	FGTKA3L0350	434902	FGTKA4L0350	434908	Six long time delay bands	4 for line, no phase loss protection 2 for motor, with phase loss protection[2]
	400[2]	FGTKA3L0400	434202	FGTKA4L0400	434261	Short time protection	Adj. 1.5-12 x Ir[2]
						Switchable to I^2 t curve	
						Five short time delay bands	From 40 to 410 milliseconds
						Instantaneous protection	Adj. 2-13 x Is[2]

LT: Ir = 0.625-1 x In
LTD: Line & Motor; 8 options

Adjustable LT & LTD settable Rating Plugs for Trip Units SMR2

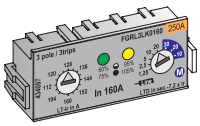

	In (A)	3 pole 3 trips Cat. no.	3 pole 3 trips Ref. no.	4 pole 3 trips[1] Cat. no.	4 pole 3 trips[1] Ref. no.	4 pole 4 trips[1] Cat. no.	4 pole 4 trips[1] Ref. no.	4 pole 3.5 trips (N=50%)[1] Cat. no.	4 pole 3.5 trips (N=50%)[1] Ref. no.
250A	160	FGRL3LK0160/7	436749	FGRL43LK0160/7	434469	FGRL4LK0160/7	434559	FGRL45LK0160/7	434472
	250	FGRL3LK0250/7	436656	FGRL43LK0250/7	434615	FGRL4LK0250/7	434562	FGRL45LK0250/7	434481
400A	250	FGRL3LL0250/7	436747	FGRL43LL0250/7	434599	FGRL4LL0250/7	434568	FGRL45LL0250/7	434579
	400	FGRL3LL0400/7	436721	FGRL43LL0400/7	434617	FGRL4LL0400/7	434584	FGRL45LL0400/7	434482
350A[2]	350[2]	FGRL3LL0350/7	436748	FGRL43LL0350/7	434601	FGRL4LL0350/7	434582	FGRL45LL0350/7	434596

(1) Neutral on the left. If neutral on the right is needed, please contact us.
(2) 400A trip unit limited to 5 LTD band settings(SMR2), a maximum ST setting of 10 x Ir and a maximum instantaneous setting of 11 x Is.
(3) Specifically configured for Motor Protection

FG630 - Circuit breaker in components

Breaker frame without Trip Unit

		3 pole		4 pole[1]					
50kA FGN	In (A)	Cat. no.	Ref. no.	Cat. no.	Ref. no.	Cat. no.	Ref. no.	Cat. no.	Ref. no.
	400	FGN306F400NF	431488	FGN406F400NF	431554				
	630	FGN306F630NF	431491	FGN406F630NF	431560				
80kA FGH	400	FGH306F400NF	431067	FGH406F400NF	431153				
	630	FGH306F630NF	431073	FGH406F630NF	431156				
150kA FGL	400	FGL306F400NF	431267	FGL406F400NF	431354				
	630	FGL306F630NF	431282	FGL406F630NF	431357				

One code covers: A standard fixed front connection breaker with current sensors + Toggle Elongator + Breaker finishing covers + Fixation hardware

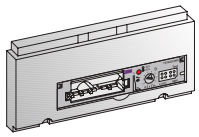

Selective Electronic Trip Unit (SMR1) without Rating Plug

		3 pole		4 pole[1]			
	In (A)	Cat. no.	Ref. no.	Cat. no.	Ref. no.		
SMR1	400	FGTAA3N0400	431721	FGTAA4N0400	431745	Long time protection Two long time delay bands (with choice of protection mode) Short time protection Instantaneous protection	Adj. Ir= 0.4 - 1 x In Line, no phase loss protection Motor with phase loss protection Adj. 2 - 13 x Ir (current dependant delay) [2] Fixed 14 x Is [2]
	500[3] ■	FGTAA3N0500	434893	FGTAA4N0500	434899		
	630	FGTAA3N0630	431736	FGTAA4N0630	431748		

Type line 0.625 - 1 x In

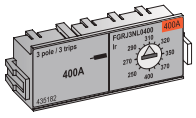

Adjustable Rating Plugs for Trip Units SMR1

	In (A)	3 pole 3 trips		4 pole[1]		4 pole 4 trips[1]		4 pole 3.5 trips (N=50%)[1]	
400A	250	FGRJ3NL0250	433148	FGRJ43NL0250	433160	FGRJ4NL0250	433184	FGRJ45NL0250	433172
	400	FGRJ3NL0400	435182	FGRJ43NL0400	435188	FGRJ4NL0400	435200	FGRJ45NL0400	435194
630A	400	FGRJ3NN0400	433154	FGRJ43NN0400	433166	FGRJ4NN0400	433190	FGRJ45NN0400	433178
	630	FGRJ3NN0630	433157	FGRJ43NN0630	433169	FGRJ4NN0630	433193	FGRJ45NN0630	433181

Type line/Motor 0.4 - 1 x In

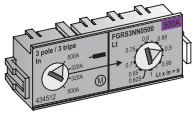

Switchable Rating Plugs for Trip Units SMR1

	In (A)	3 pole 3 trips		4 pole 3 trips[1]		4 pole 4 trips[1]		4 pole 3.5 trips (N=50%)[1]	
400A	400	FGRS3NL0400	433235	FGRS43NL0400	433241	FGRS4NL0400	433253	FGRS45NL0400	433247
500[3] ■	500	FGRS3NN0500	434512	FGRS43NN0500	434521	FGRS4NN0500	434542	FGRS45NN0500	434530

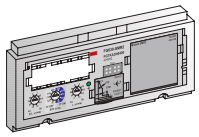

Modular Electronic Trip Unit (SMR2) without Rating Plug

		3 pole		4 pole 4 trips[1]			
	In (A)	Cat. no.	Ref. no.	Cat. no.	Ref. no.		
SMR2	400	FGTKA3N0400	434203	FGTKA4N0400	434263	4 for line, no phase loss protection Six long time delay bands Short time protection Switchable to I^2t curve Five short time delay bands Instantaneous protection	Adj. Ir= 0.4 - 1 x In 4 for line, no phase loss protection 2 for motor, with phase loss protection[2] Adj. 1.5-12 x Ir[2] From 40 to 410 milliseconds Adj. 2-13 x Is[2]
	500[3] ■	FGTKA3N0500	434905	FGTKA4N0500	434911		
	630[2]	FGTKA3N0630	434204	FGTKA4N0630	434265		

LT: Ir = 0.625-1 x In
LTD: Line & Motor; 8 options

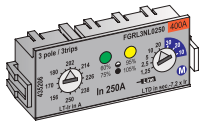

Adjustable LT & LTD settable Rating Plugs for Trip Units SMR2

	In (A)	3 pole 3 trips		4 pole 3 trips[1]		4 pole 4 trips[1]		4 pole 3.5 trips (N=50%)[1]	
400A	250	FGRL3NL0250/7	436739	FGRL43NL0250/7	434588	FGRL4NL0250/7	434492	FGRL45NL0250/7	434592
	400	FGRL3NL0400/7	436746	FGRL43NL0400/7	434590	FGRL4NL0400/7	434493	FGRL45NL0400/7	434594
630A	400	FGRL3NN0400/7	436726	FGRL43NN0400/7	434605	FGRL4NN0400/7	434496	FGRL45NN0400/7	434581
	630	FGRL3NN0630/7	436722	FGRL43NN0630/7	434622	FGRL4NN0630/7	434532	FGRL45NN0630/7	434624
500[2] ■	500[2]	FGRL3NN0500/7	436738	FGRL43NN0500/7	434607	FGRL4NN0500/7	434502	FGRL45NN0500/7	434597

Extension modules for the SMR2 Electronic trip unit

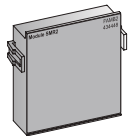

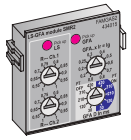

Plug-in types replacing the filler module (1 pc max.)

SMR2	Ammeter with 4 digit LCD display	FAMAM2	436183
	Groundfault alarm + Modbus communication	FAMGAM2	436185
	Groundfault alarm + 2 channel load shedding device	FAMGAS2	436186
	Groundfault alarm + Fault type indicators	FAMGAT2	436187
	Groundfault protection + Modbus communication	FAMGFM2	436188
	Groundfault protection + 2 channel load shedding device	FAMGFS2	436189
	Groundfault protection + Fault type indicators	FAMGFT2	436190
	2 channel load shedding device + Modbus communication	FAMSM2	436192
	2 channel load shedding device + Fault type indicators	FAMST2	436197
	Fault type indicators + Modbus communication	FAMMT2	436191
	Spare filler module	FAMB2	434448
	One code covers: A plug-in module and where needed connection hardware		

Other Modules

SMR2	External communication and contact module (4 contacts, 1A/400V)[4]	FAMECM	434013
	One code covers: Module and connection hardware		

(1) Neutral on the left. If neutral on the right is needed, please contact us.
(2) 630A trip unit limited to 5 LTD band settings(SMR2), a maximum ST setting of 10 x Ir and a maximum instantaneous setting of 11 x Is.
(3) Specifically configured for Motor Protection
(4) Is needed for Modbus communication (1 per breaker).

Just rel

Thermal magnetic & Magnetic only trip units

B.2 FD frame: LTM, LTMD, GTM, Mag Break™

B.6 FE frame: LTM, LTMD, GTM, Mag Break™

Electronic trip units

B.11 SMR1 range

B.12 FE160 & FE250 selective electronic trip unit SMR1

B.13 Setting the selective electronic trip unit SMR1

B.18 SMR2 range

B.19 FG400 & FG630 advanced electronic trip unit SMR2

B.24 FK800 - FK1600 electronic trip unit SMR1e, s & g

B.28 Accessories for SMR1 and SMR2 types

B.29 Trip units - overview of available types

y on us

Thermal Magnetic Trip Units

FD frame

Record Plus™ circuit breakers are designed to isolate and switch low voltage distribution circuits and to protect the conductors, equipment and devices included in these circuits.
The FD frame size is designed to use electro-mechanical trip units. These are typical thermal magnetic devices which offer an overload (thermal) and short-circuit protection (magnetic).
The breaker can also be equipped with a Mag Break™ magnetic-only trip unit that offers short-circuit protection.

The trip units have been designed with the user in mind. The trip unit ratings are always indicated in amperes. To prevent unauthorized manipulation of the breaker settings each trip unit comes with a transparent, tamper-free (sealable) cover.
The units come as 1, 2, 3 and 4 pole devices and are available in a number of application-defined subvariants. Thermal protection devices are normally calibrated at an ambient temperature of 40 degrees centigrade. Some executions are also available in a verison calibrated at 55 degrees. The time current curves published here are valid for both executions.

The trip unit is an integrated part of the breaker and is not interchangeable. The following versions are available:

LTM (line protection thermal magnetic)
(FD...TF sub type)
A trip unit designed for the protection of generic loads, the device is available as 3 and 4p model for the Concise (FD160C) and Effective (FD160E) breaker types. The same trip unit is also used in the single pole variants of the standard (FD160N) and Hi-Breaker (FD160H) types.
This sub type has a fixed thermal device (=In) and a fixed magnetic relay set at 10 x In (8 x In for the 160A rating) .

LTM (line protection thermal magnetic)
(FD..TC & TE sub type)
A trip unit designed for the protection of generic loads, the device is available as 3 and 4p model for the Concise (FD160C) and Effective (FD160E) breaker types.
This sub type has an adjustable thermal setting of 0.8 to 1 x In and a fixed magnetic relay set at 10 x In (8 x In for the 160A rating).

LTMD (line thermal magnetic, selective)
(FD..TD sub type)
A trip unit designed for the selective protection of generic loads, it is available as 2p model for the FD160N and as 3 and 4p model for the FD160S, N, H & L breaker types.
Making full use of the FD frames unique propeties this device offers both full and enhanced selectivity with downstream devices as the ElfaPlus, Red Line MCB's and the Surion Motor Starter.
It has an adjustable thermal setting of 0.8 to 1 x In and a fixed magnetic relay set at 10 x In (8 x In for the 160A rating).

GTM (generator thermal magnetic)
(FD..TG sub type)
Suitable for the protection of generator circuits and or long cable runs, the device is available as 3 and 4p model for the Standard (FD160N) and Hi-Break (FD160H) breaker types.
This sub type has an adjustable thermal setting of 0.8 to 1 x In and a reduced fixed magnetic relay setting of 4 or 5 x In .

Mag Break™ (magnetic only)
(FD..MO sub type)
A trip unit designed to offer short circuit protection for, use in motor protection circuits in coordination with a contactor and thermal overload relay in accordamce with the EN 60 947-4 standard. The device is available as 3 and 4p model for the FD160N, H & L breaker types
This sub type has NO thermal protection and an magnetic relay that is adjustable from 10 to 15 x In .

Y (non automatic - switch disconnector)
A device available in a 63A and 160A variant.
Has no protection elements.
Designed as switch disconnector

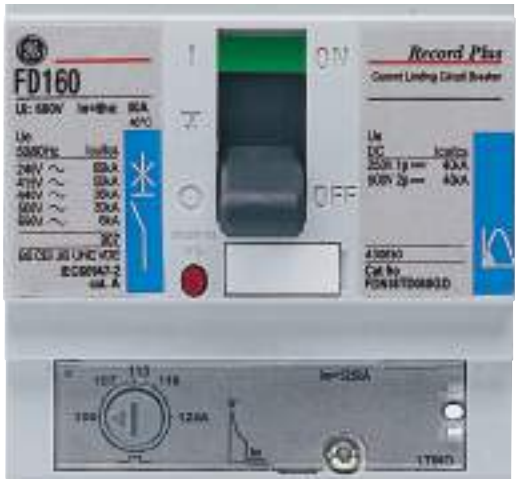

FD160 Trip Unit options

FD frame						Trip unit overview							
						In	Thermal setting Ir pick-up band 1.05 ÷ 1.3 Ir		Magnetic setting Im pick-up band ± 20% Im		Neutral protection		
Type	Sub-type	Applicable for breaker types				(A)	min (A)	max (A)		fix (A)	4P4T	4P 3.5T	4P3T
LTM	TF	C	E			16		16		160	=Ir		
						20		20		200	=Ir		
						25		25		250	=Ir		
						32		32		320	=Ir		
						40	Ir = In	40	10 x In	400	=Ir		
						50		50		500	=Ir		
						63		63		630	=Ir		
						80		80		800	=Ir		
						100		100		1000	=Ir		
						125		125		1250	=Ir		
						160		160	8 x In	1280	=Ir		
LTM	TC TE	C	E			16		12.8 16		160	=Ir		
						20		16 20		200	=Ir		
						25		20 25		250	=Ir		
						32		25.6 32		320	=Ir		
						40	Ir = 0.8÷1In	32 40	10 x In	400	=Ir		
						50		40 50		500	=Ir		
						63		50.4 63		630	=Ir		
						80		64 80		800	=Ir		
						100		80 100		1000	=Ir		
						125		100 125		1250	=Ir		
						160		128 160	8 x In	1280	=Ir		
LTMD	TD	S	N	H	L	16		12.8 16		160	=Ir		not protected (1)
						20		16 20		200	=Ir		
						25		20 25		250	=Ir		
						32		25.6 32		320	=Ir		
						40	Ir = 0.8÷1In	32 40	10 x In	400	=Ir		
						50		40 50		500	=Ir		
						63		50.4 63		630	=Ir	=Ir/2 (1)	
						80		64 80		800	=Ir	=Ir/2 (1)	
						100		80 100		1000	=Ir	=Ir/2 (1)	
						125		100 125		1250	=Ir	=Ir/2 (1)	
						160		128 160	8 x In	1280	=Ir	=Ir/2 (1)	
GTM	TG		N	H		25		20 25	5 x In	125	=Ir		not protected
						32		25.6 32		160	=Ir		
						40		32 40		160	=Ir		
						50	Ir = 0.8÷1In	40 50		200	=Ir		
						63		50.4 63		252	=Ir		
						80		64 80	4 x In	320	=Ir	=Ir/2	
						100		80 100		400	=Ir	=Ir/2	
						125		100 125		500	=Ir	=Ir/2	
						160		128 160		640	=Ir	=Ir/2	
Mag. Break™	MO		N	H	L	3	No protection		Adjust-able 10÷15In	35 52.5			not protected
						7				70 105			
						12.5				125 187.5			
						20				200 300			
						30				300 450			
						50				500 750			
						80				800 1200			
						100				1000 1500			
Y		Y				63	No protection						
						160							

(1) Not available in S type

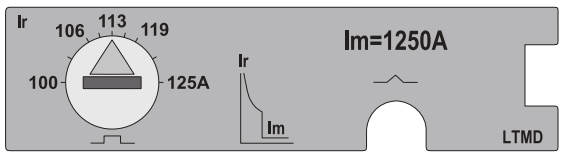

Depicted is the LTMD type

Time Current Curves

FD frame

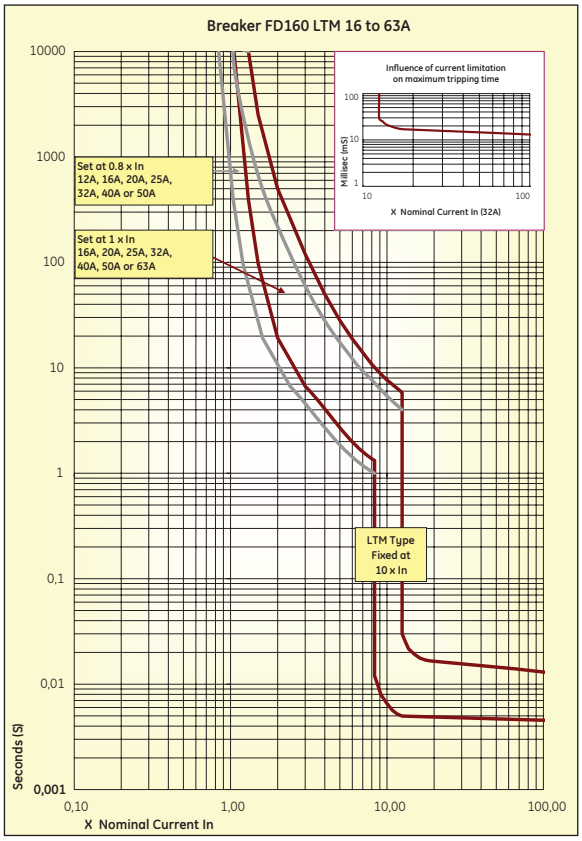

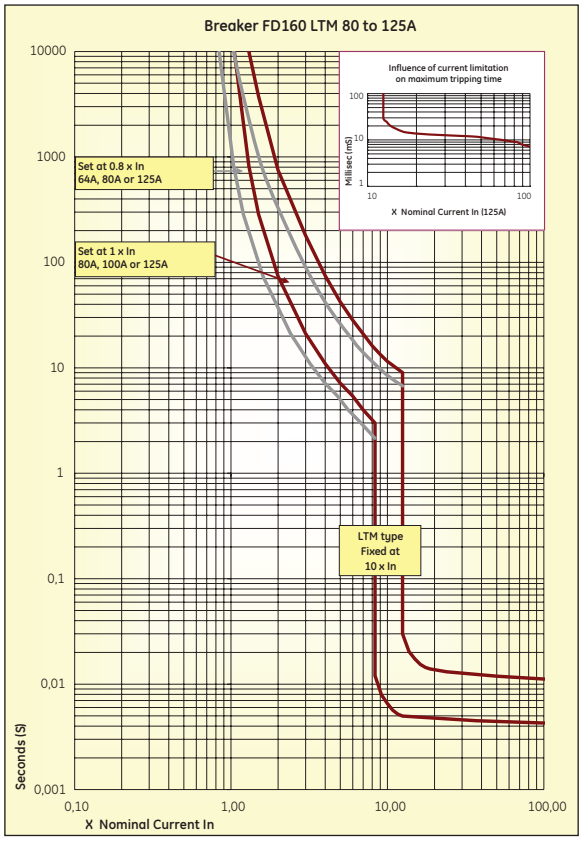

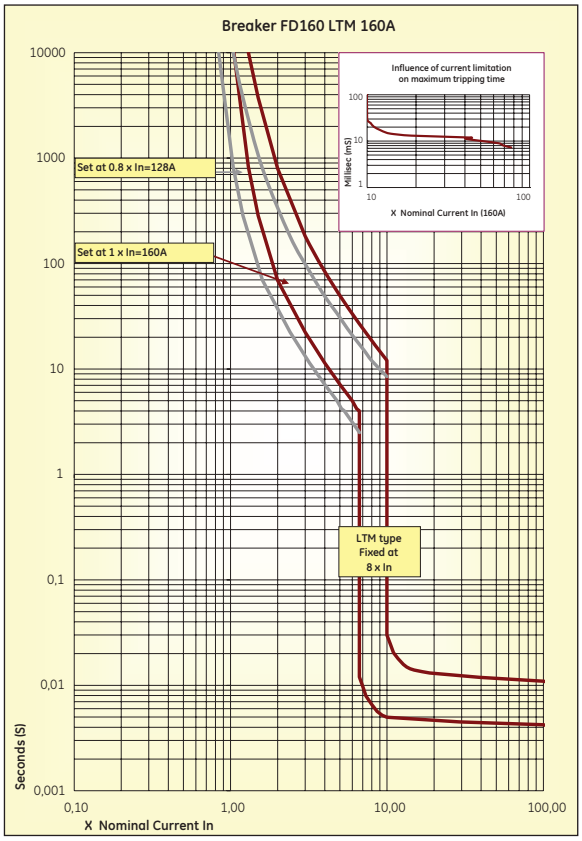

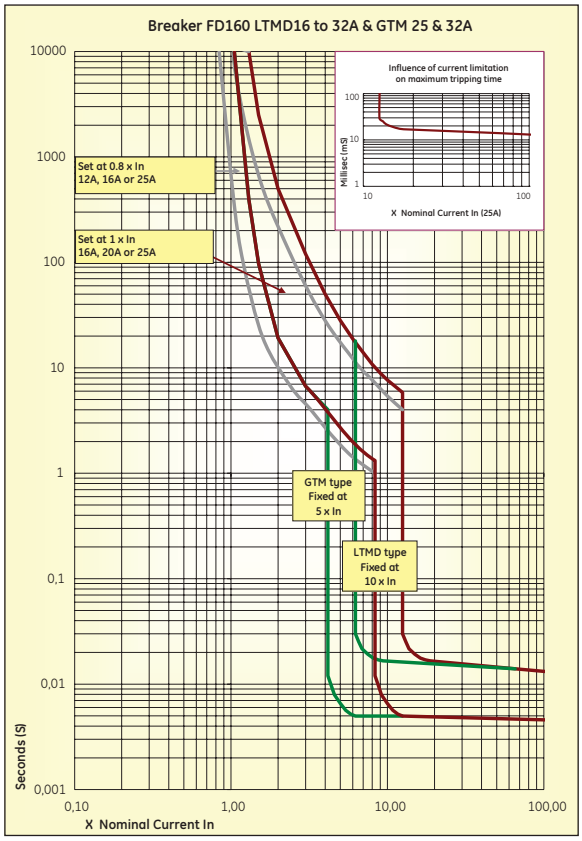

Time current curves are depicted in cold state.
For the types with fixed thermal settings (FD..TF) the 'set at 1x in' curves apply

Time Current Curves

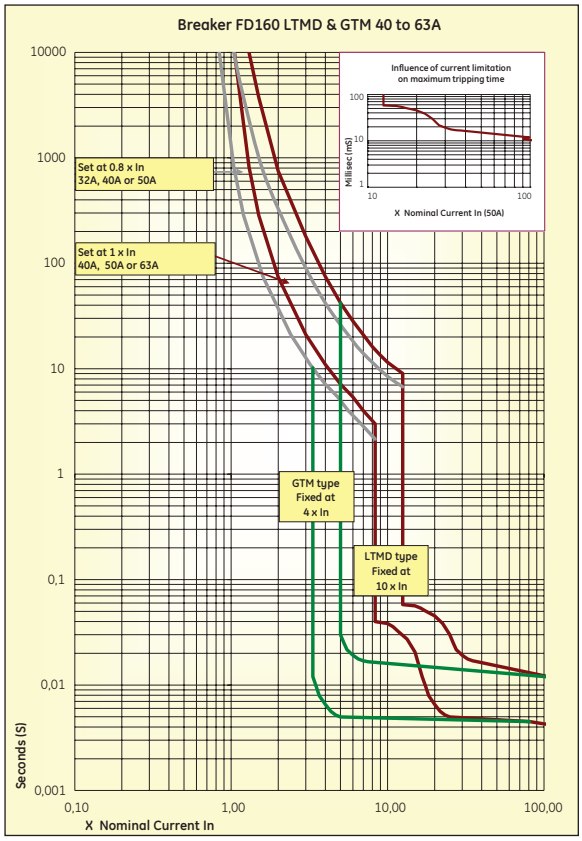

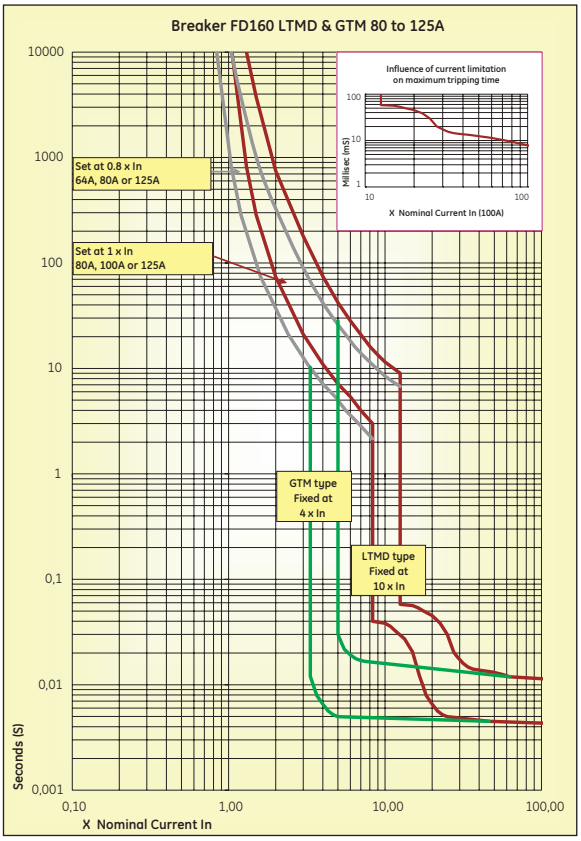

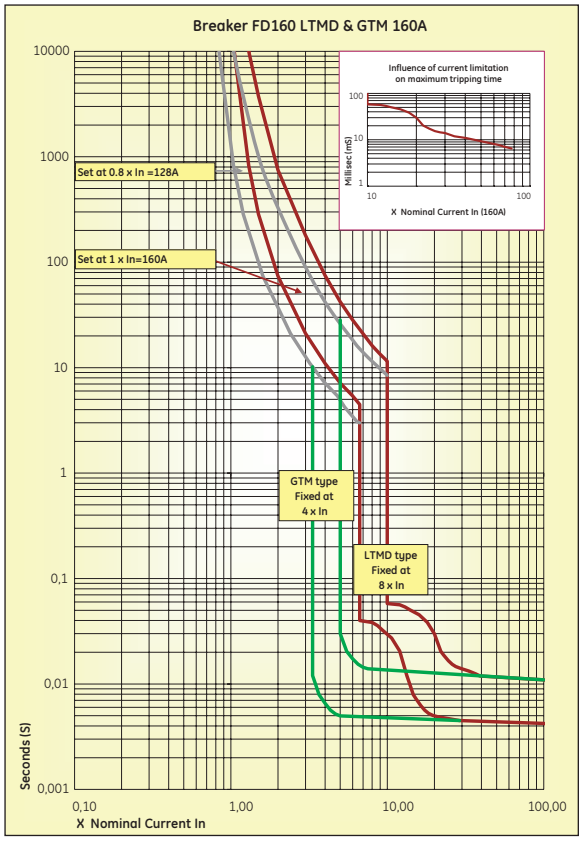

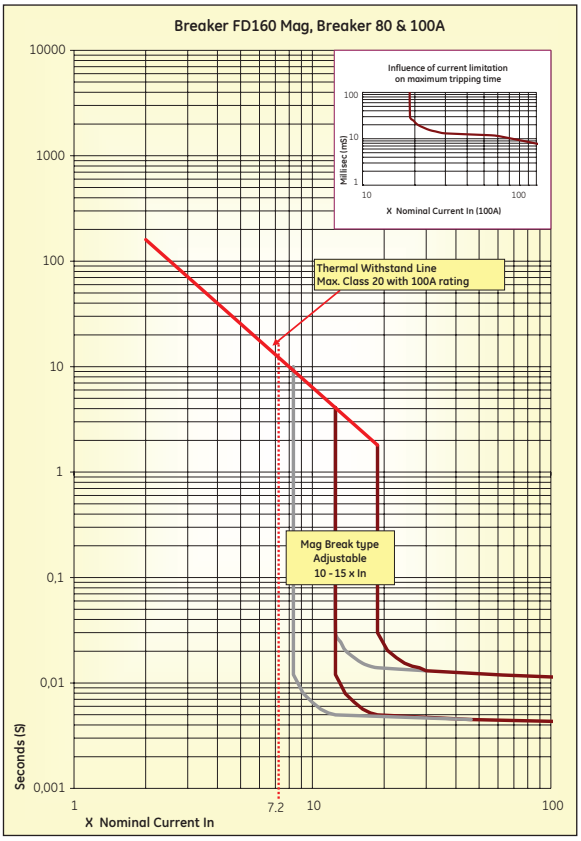

Time current curves are depicted in cold state.
For the types with fixed thermal settings (FD..TF) the 'set at 1x in' curves apply

Thermal Magnetic Trip Units

FE frame

The breakers are availble as a complete entity or in kit form where a Breaker Frame and an interchangaeble trip unit are the basic components. The interchangeability feature covers the electromechanical trip units described here and the electronic devices described on page B12.
Each Trip Unit is equipped with an Interchange Interlock that prevents the inadvertent use of a trip unit designed for the FE250 model in an FE160 or vice versa.
The standard Electromechanical Trip Units are equipped with a GE patented fault type indicator. The device has two indicator flags, one indicating an overload event (coloured brown) and a second, coured blue, indicating a short circuit or an event triggered by an RCD .
(If the indicated protection devices are present).
Thermal protection devices are normally calibrated at an ambient temperature of 40 degrees centigrade. Some executions are also available in a verison calibrated at 55 degrees. The time current curves published here are valid for both executions.

The following versions are available:

LTM (line thermal magnetic protection)
(FE...TA sub type)
A trip unit designed for the protection of generic loads, the device is available as 3 and 4p model for the FE160 and FE 250 frame sizes.
This sub type has an adjustable thermal and magnetic setting. The thermal setting range is 0.8 to 1 x In and the magnetic relay is adjustable from 5-10 x In. (Fixed at 8 x In for Ratings < 80A).

LTMD (Selective thermal magnetic protection)
(FE...TD sub type)
A trip unit designed for the selective protection of generic loads, it is available as 3 and 4p model for the FE160 and FE250 N, H & L breaker types.
Making full use of the FE frames unique propeties this device offers both full and enhanced selectivity with downstream devices as the Record Plus FD160, the ElfaPlus, Red Line MCB's and the Surion Motor Starter.
This sub type has an adjustable thermal and magnetic setting. The thermal setting range is 0.8 to 1 x In and the magnetic relay is adjustable from 5-10 x In.

GTM (generator thermal magnetic)
(FE...TG sub type)
Suitable for the protection of generator circuits and or long cable runs, the device is available as 3 and 4p model for the Standard (FE160N & FE250N) and Hi-Break (FE160H & FE250H) breaker types.
This sub type has an adjustable thermal and magnetic setting. The thermal setting range is 0.8 to 1 x In and the magnetic relay is adjustable from 3-5 x In.

Mag Break™ (magnetic only)
(FE...MO sub type)
A trip unit designed to offer short circuit protection for, use in motor protection circuits in coordination with a contactor and thermal overload relay in accordance with the EN 60 947-4 standard. The device is available as 3 and 4p model for the FE160 & FE250 N, H & L breaker types
This sub type has NO thermal protection and an magnetic relay that is adjustable from 10 to 15 x In.

Y (non automatic - switch disconnector)
A 'dummy 'trip unit available in a 160A and 250A variant.
Has no protection elements.
Designed as switch disconnector.

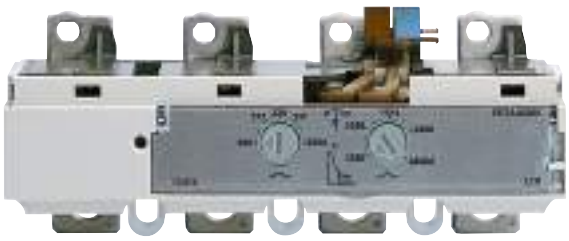

FE160 and FE250 breakers - trip unit overview (electromechanical)

FE frame						Electro-mechanical trip unit overview								
						In	Thermal Ir pick-up band 1.05 ÷ 1.3 Ir			Magnetic Im pick-up band ± 20% Im			Neutral protection		
Type	Subtype	Applicable for breaker types				(A)		min (A)	max (A)		min (A)	max (A)	4P4T	4P 3.5T	4P3T
LTM	TA	N	H	L	FE160	25		20	25		200		=Ir		not protected
						32		26	32		256		=Ir		
						40	adjustable	32	40	Fixed	320		=Ir		
						50	0.8÷1xIn	40	50	8 x In	400		=Ir		
						63		50	63		504		=Ir	=Ir/2	
						80		64	80		400	800	=Ir	=Ir/2	
						100		80	100		500	1000	=Ir	=Ir/2	
						125		100	125		625	1250	=Ir	=Ir/2	
						160		128	160		800	1600	=Ir	=Ir/2	
		V			FE250	125		100	125	adjustable	625	1250			
						160	adjustable	128	160	5÷10 In	800	1600			
						200	0.8÷1xIn	160	200		1000	2000			
						250		200	250		1250	2500			
LTMD	TD	N	H	L	FE160	100		80	100		500	1000	=Ir	=Ir/2	not protected
						125	adjustable	100	125	adjustable	625	1250	=Ir	=Ir/2	
						160	0.8÷1xIn	128	160	5÷10 In	800	1600	=Ir	=Ir/2	
					FE250	125		100	125		625	1250	=Ir	=Ir/2	
						160	adjustable	128	160	adjustable	800	1600	=Ir	=Ir/2	
						200	0.8÷1xIn	160	200	5÷10 In	1000	2000	=Ir	=Ir/2	
						250		200	250		1250	2500	=Ir	=Ir/2	
GTM	TG	N	H	L	FE160	100		60	100		300	400	=Ir	=Ir/2	not protected
						125	adjustable	100	125		375	625	=Ir	=Ir/2	
						160	0.8÷1xIn	128	160		480	800	=Ir	=Ir/2	
					FE250	125		100	125	adjustable	375	625	=Ir	=Ir/2	
						160	adjustable	128 ❶	160	3-5 In	480 ❷	800	=Ir	=Ir/2	
						200	0.8÷1xIn	160	200		600	1000	=Ir	=Ir/2	
						250		200	250		750	1250	=Ir	=Ir/2	
Mag. Break™	MO	N	H	L	FE160	3.5					24.5	52.5			not protected
						7					49	105			
						12.5				adjustable	87.5	188			
						20		No protection		7÷15In	140	300			
						30					210	450			
						50					500	750			
						80					800	1200			
						100					1000	1500			
						125				adjustable	1250	1875			
					FE250	160				10÷15In	1600	2400			
						160					1600	2400			
						200					2000	3000			
						250					2500	3750			
Y		Y			FE160	160	No protection								
					FE250	250									

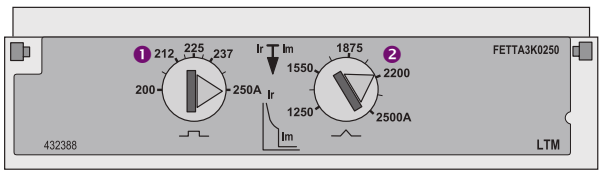

Depicted is the LTMD type

Time Current Curves

FE frame

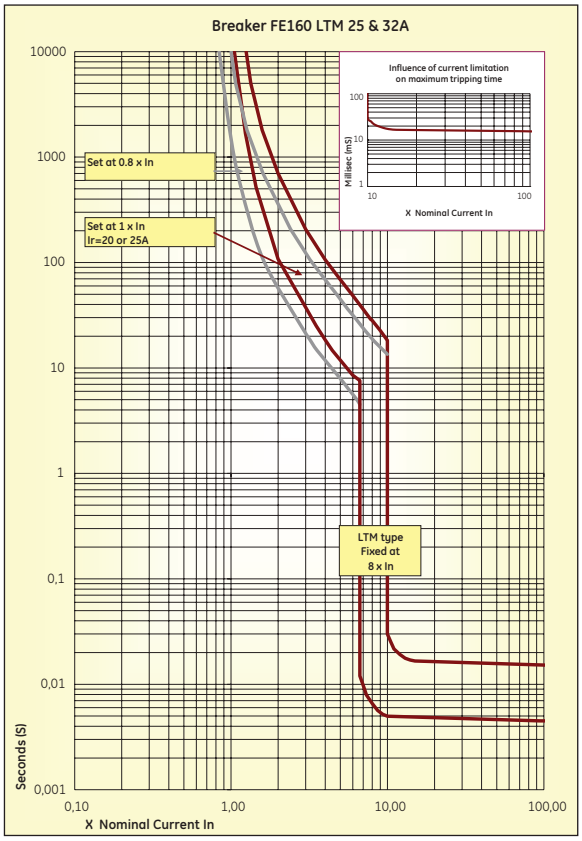

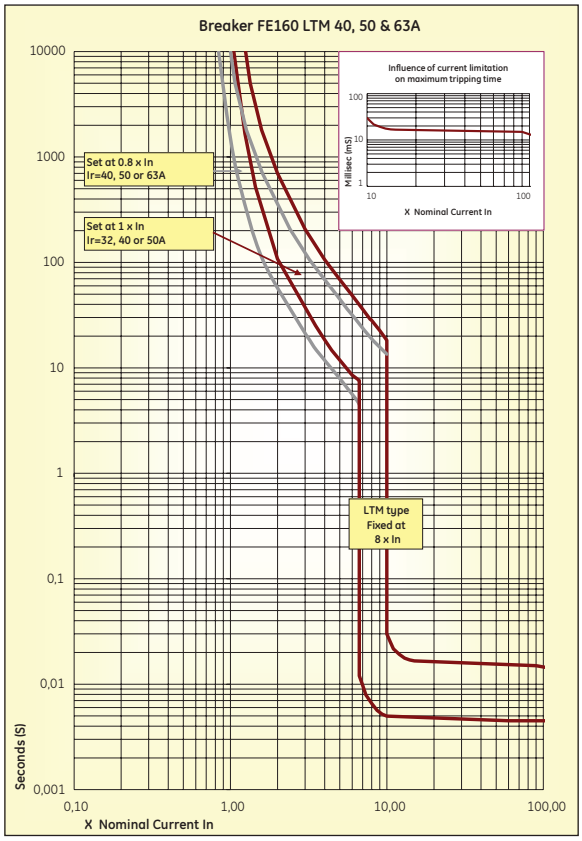

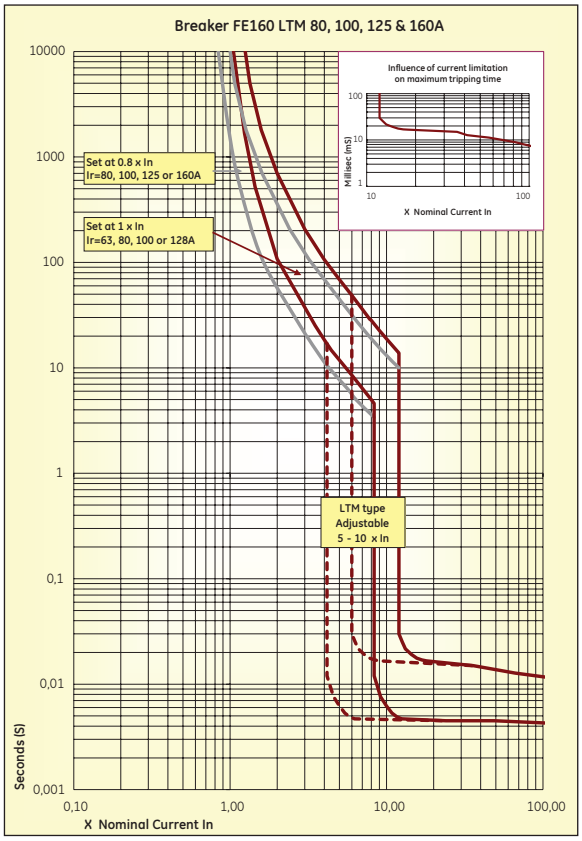

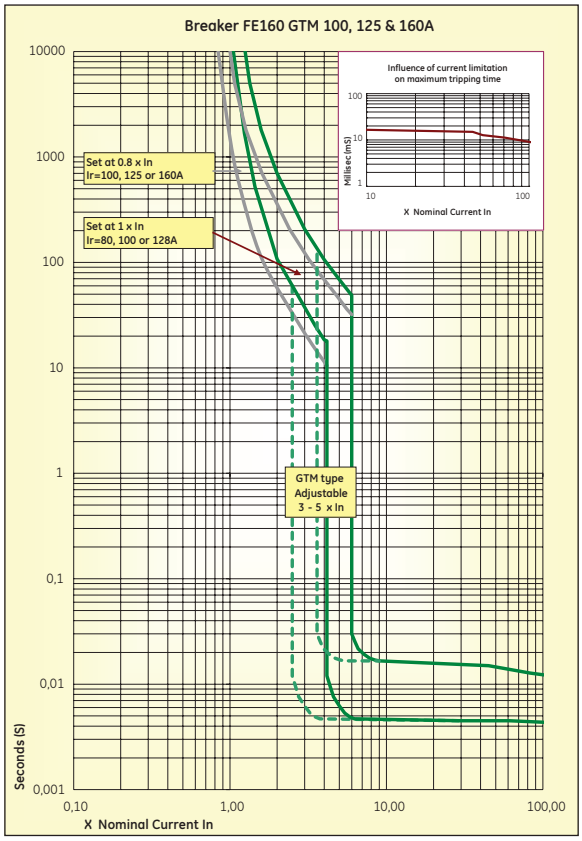

Time current curves are depicted in cold state.

Time Current Curves

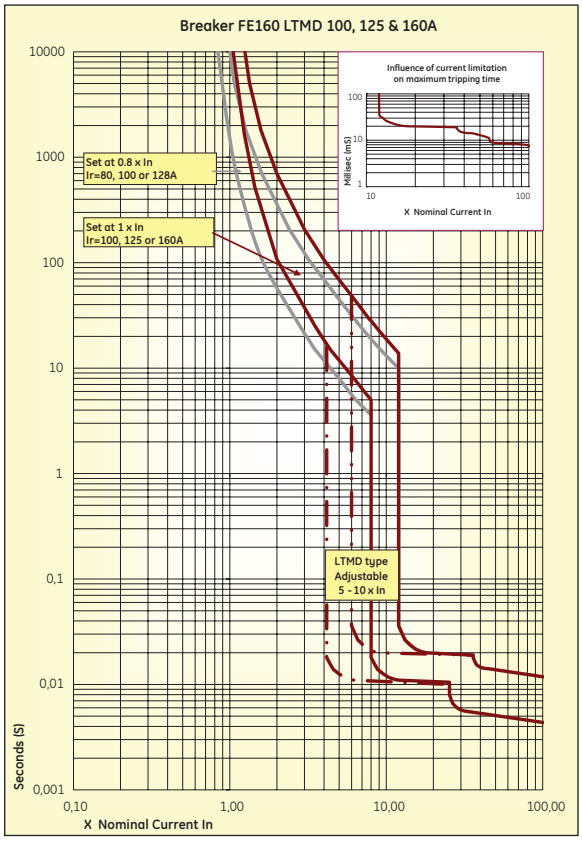

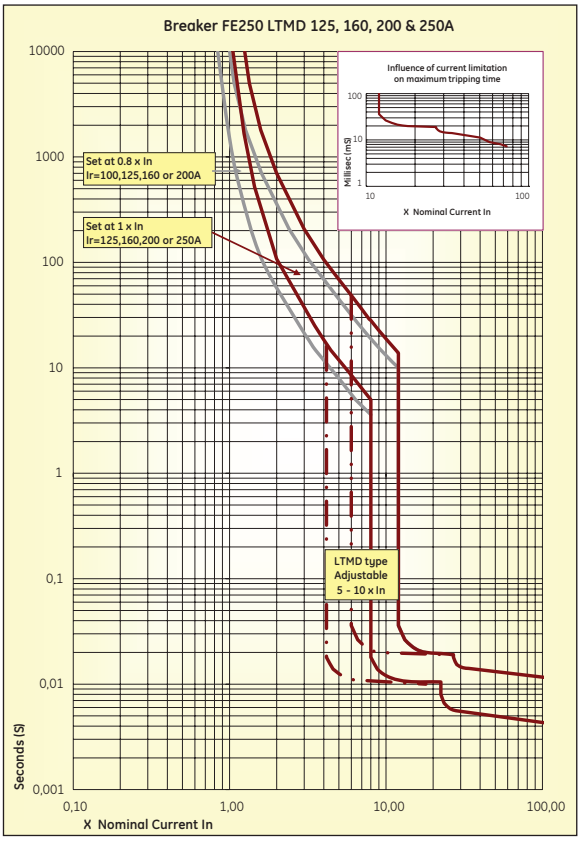

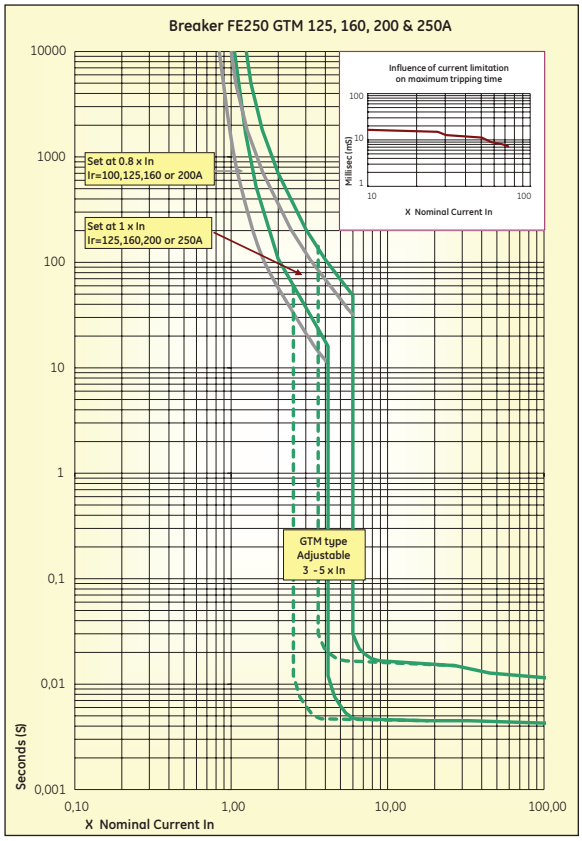

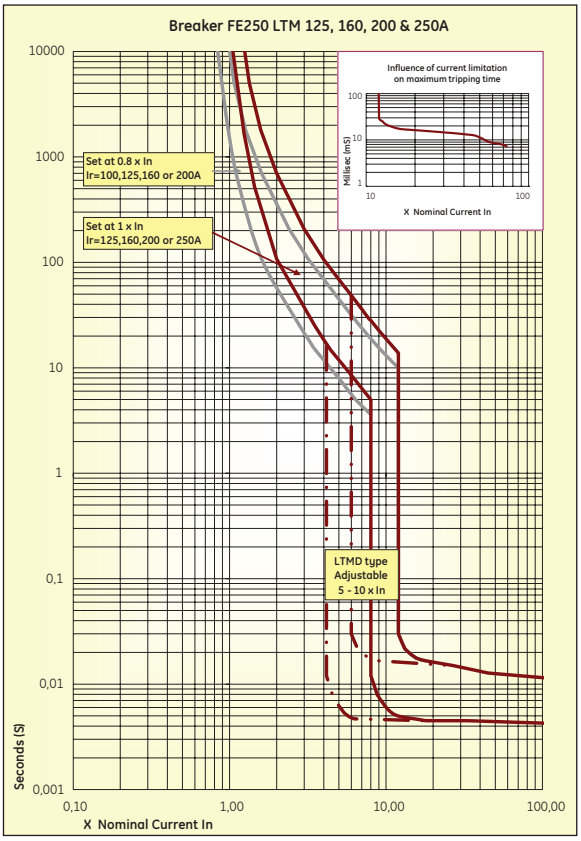

Time current curves are depicted in cold state.

Time Current Curves

FE frame

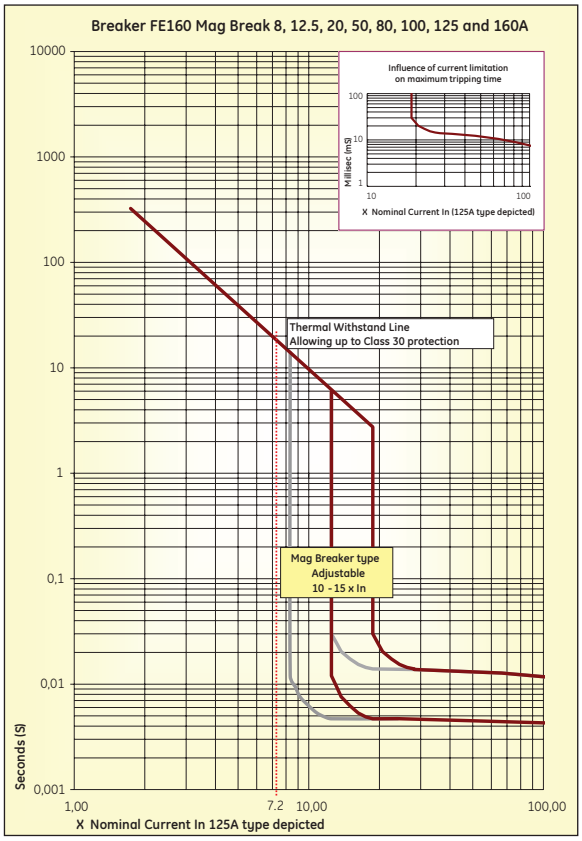

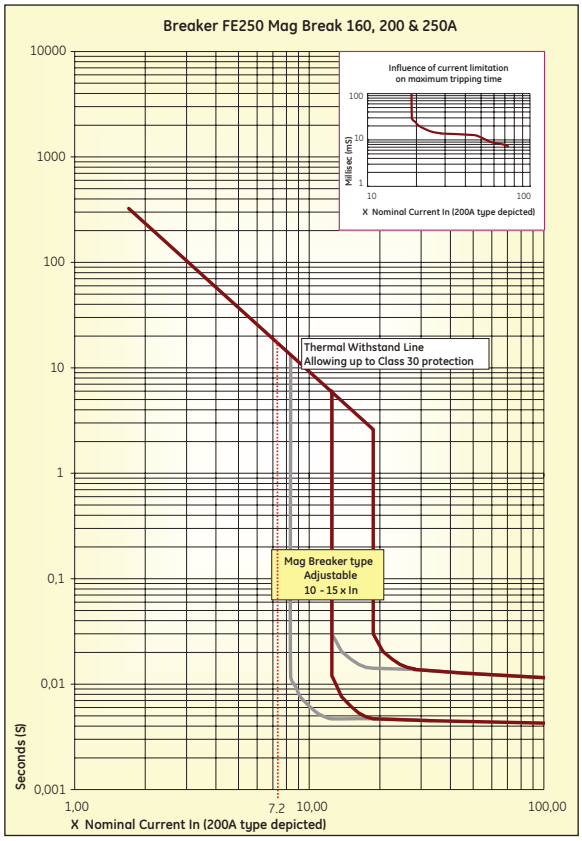

Time current curves are depicted in cold state.

Electronic Trip Units

SMR range

Electronic trip units that offer sophisticated protective functions and wide setting bands are standard protection devices for the FG400, FG630, FK800, FK1250 and FK1600 frame sizes. The FE frame can be equipped with interchangeable trip units offering a choice of the electronic or the electro-mechanical device. Each electronic device has been designed with the abnormalities of modern low voltage distribution circuits in mind and has been rigorously tested to cope with harmonic currents, electromagnetic fields, inrush currents and spikes, thus preventing phenomanae as incorrect current measurement and nuisance tripping.
The devices exist in a number of performance tiers, the SMR1 device for the FE and FG frame sizes, the SMR 2 for the FG frame size and the SMR1e, 1s and 1g types for the FK frame size.

SMR1
The SMR1 trip unit type is available for all FE and FG frame sizes. The device has two basic protective functions. The first is a **L**ong **T**ime or overload protection with two time bands designed to match motor or cable characteristics and a user defineable setting range. When set to motor protection mode a phase loss protection is initiated that will trip the breaker when the difference in current between one phase line and the average of all three phase drops below 20% .
The second device, the **S**hort **T**ime protection, offers protection against short-circuits and is settable from 2 to 13 (1) x the adjusted LT protection.

This easy-to-adjust trip unit is equipped with a LT pre-alarm device made up of a LED indicator on the trip unit front face and an electronic contact.
Before the breaker trip is initialized the LED will at first start to blink (at about 0.95 x Ir). When the current flowing through the breaker reaches about 1.05 x Ir and a trip is imminent , the LED stops blinking, remains on and an electronic contact closes, this just before the circuit breaker trips and power is disconnected. This electronic signal can be linked to an external LT module that transforms the electronic signal into one that allows the operation of an external relay.
(The LT module is a modular DIN-rail device).

All SMR 1 trip units have a built-in temperature sensor that trips the breaker at temperatures above 90°C. It thus prevents the breaker and electrical components in its immediate vicinity from overheating.

Each SMR1 trip unit comes with a transparent, tamper-free (sealable) cover, this to prevent unauthorized manipulation of the breaker settings. In the FE frame size they are supplied in a single housing including current sensors that can fully displace the alternative electromechanical device while the FG type is supplied as an electronic pouch (current sensors supplied with the breaker).

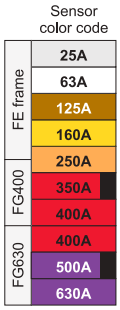

The SMR 1 uses rating plugs that allow the user flexibility to make a last minute choice in the required current rating, protected poles or protection band. These exist in two variants, adjustable and switchable. In order to prevent an insertion of a rating plug into the incorrect trip unit (number of poles and current rating) a mechanical interlock and color coding system are present.

The device is supplied with an electronic actuator coil that fits into a pocket in the breaker housing and is then connected to the trip unit. Without mounted and connected actuator coil the breaker will not function. However, in order to verify a correct operation of the combination a simple test device is available to test the assembly.
We strongly recommend the use of this test device.

Adjustable rating plug
Specifically designed for line protection with a setting range of 0.625 to 1 x the plug rating over 16 setpoints. The settings on the devices are in current values and thus allow for ease of setting.

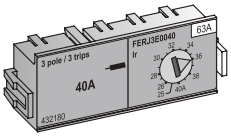

Each trip unit size can be equipped with one of two available adjustable rating plugs types. For 4 pole trip units the rating plugs exist in 3 and 4pole protected versions with a choice in neutral rating between 50 or 100% of the phase value.

Switchable rating plug
Allows for a choice of line or class 10 motor protection(2). The device has two setting knobs: one for the desired rating and band selection and one for the definite current setting.
The current setting is in multiples of the selected rating and has a range of 0.4 to 1 x the trip unit size over 32 setpoints. Each trip unit size has one switchable rating plug. For 4 pole trip units the rating plugs exist in 3 and 4 pole protected versions with a choice in neutral rating between 50 or 100% of the phase value.

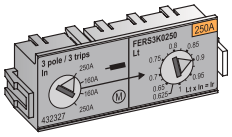

(1) Some FG types have a smaller ST setting range.
(2) according to IEC EN 60947-4.1

SMR1 range

FE160 & FE250 Selective Electronic Trip Unit SMR1

Trip units are available in 10 different versions depending on the frame rating and the network frequency.
FE 160 frame size 50/60 Hz 25, 63, 125 and 160A
FE250 frame size 50/60 Hz 125, 160 and 250A
For use at 400 cycles applications the following variants are available on request:
FE160 125 & 160A ratings, FE250 -250A rating

The trip units must be equipped with a rating plug that establishes the rated current of the protective device and its setting. A colour code and a mechanical interlock prevent incorrect combinations of electronic trip units and rating plugs. The 50/60Hz and 400Hz variants use the same rating plug. When NO rating plug is installed in the breaker, all protective functions remain operational. This at a reduced current rating. (15 -20% of the chosen trip unit rating).

FE frame					Electronic trip unit overview								
					In[1]	LT			ST				
						pick-up band 1.05÷1.2 Ir			pick-up band ± 20% Im				
					(A)	Ir setting	min (A)	max (A)	Im setting	min (A)	max (A)		
SMR1 + adjustable rating plug	N	H	L	FE160	16	0.625-1xIn 16 steps line protection	10	16	2-13xIr 10 steps	20	208	=Ir	not protected
					25		16	25		32	325	=Ir	
					40		25	40		50	520	=Ir	
					63		40	63		79	819	=Ir	=Ir/2
					80		50	80		101	1040	=Ir	=Ir/2
					125		80	125		160	1625	=Ir	=Ir/2
					100		63	100		126	1300	=Ir	=Ir/2
					160		100	160		200	2080	=Ir	=Ir/2
				FE250	80	0.625-1xIn 16 steps line protection	50	80	2-13xIr 10 steps	79	819	=Ir	=Ir/2
					125		63	125		126	1625	=Ir	=Ir/2
					100		80	100		160	1300	=Ir	=Ir/2
					160		100	160		200	2080	=Ir	=Ir/2
					160		100	160		200	2080	=Ir	=Ir/2
					250		160	250		320	3250	=Ir	=Ir/2
SMR1 + switchable rating plug	N	H	L	FE160	25	0.4-1xIn 32 steps line/mot. protection	10	25	2-13xIr 10 steps	20	325	=Ir	not protected
					63		25	63		50	819	=Ir	=Ir/2
					125		50	125		100	1625	=Ir	=Ir/2
					160		64	160		128	2080	=Ir	=Ir/2
				FE250	125	0.4-1xIn 32 steps line/ mot. prot.	50	125	2-13xIr 10 steps	100	1625	=Ir	=Ir/2
					160		❶ 64	❷ 160		❸ 128	2080	=Ir	=Ir/2
					250		100	250		200	3250	=Ir	=Ir/2

(1) Colour code indicates which rating plug can be applied where

On switching to Motor Protection a phase loss protection is initiated.
Do not use for line protection.

FG400 & FG630 Selective Electronic Trip Unit SMR1

Trip Units are available in 7 different versions depending on the frame rating and the network frequency.
FG400 frame size 50/60 Hz 250 & 400A
FG630 frame size 50/60 Hz 400, 500 & 630A
For use at 400 cycles applications the following variants are available on request:
FG400 400A ratings, FG630 -630A rating

The trip units must be equipped with a rating plug that establishes the rated current of the protective device and its setting. A colour code and a mechanical interlock prevent incorrect combinations of electronic trip units and rating plugs. The 50/60Hz and 400Hz variants use the same rating plug.
For special applications a version with disabled LT or overload protection is available complete with a specific rating plug.

FG frame					Electronic trip unit overview									
					In[1]	LT			ST			Neutral protection		
						pick-up band 1.05÷1.2 Ir			pick-up band ± 20% Im					
					(A)	Ir setting	min (A)	max (A)	Im setting	min (A)	max (A)	4P4T	4P 3TN	4P3T
SMR1 + adjustable rating plug	N	H	L	FG400	160	0.625-1 xIn 16 steps line prot.	100	160	2-13xIr 10 steps	200	2080	=Ir	=Ir/2	not protected
					250		160	250		320	3250	=Ir	=Ir/2	
					250		160	250		320	3250	=Ir	=Ir/2	
					400		250	400		500	5200	=Ir	=Ir/2	
				FG630	400		250	400		500	5200	=Ir	=Ir/2	
					630		400	630	2-10 Ir	800	6300	=Ir	=Ir/2	
SMR1 + switchable rating plug	N	H	L	FG400	250	0.4-1xIn 32 steps line/mot. prot.	100	250	2-13 Ir 10 steps	200	3250	=Ir	=Ir/2	not protected
					400		160	400		320	3250	=Ir	=Ir/2	
				FG630	400		160	400		320	5200	=Ir	=Ir/2	
					500		250	500		500	6500	=Ir	=Ir/2	

(1) Colour code indicates which rating plug can be applied where

On switching to Motor Protection a phase loss protection is initiated.
Do not use for line protection.

SMR1 range

Setting the Selective Electronic Trip Unit SMR1

How to set the device
The defined rating plug defines the long time (LT) setting range and the manner of its adjustment.

LT setting with adjustable rating plug
One knob with 16 positions allows the user a current setting (Ir) between 0.625 and 1 times the chosen rating. (values in A)

LT setting with switchable rating plug
One knob to set the protection band (line class 5 or motor class 10) and the rated current value (2 current value settings of 0.625 and 1 x the trip unit rating) - in sketch trip unit rating **250A** settings **160A or 250A**.
A second knob with 16 positions allows the user to set the current (Ir in multipliers of chosen rating).
The combination of these two knobs allows a setting range of 0.4 to 1 x the trip unit rating with 32 setpoints.

Protection band timing (1)

Band timings	1.5 x Ir	7.2 x Ir
Line protection	65 - 95 sec	2.0 - 3.0 sec
Motor protection	200 - 300 sec	6.4 - 9.6 sec

The indicated timings are valid in cold state. Warm state timings take into account the heating of the installation due to current flow and are lower.

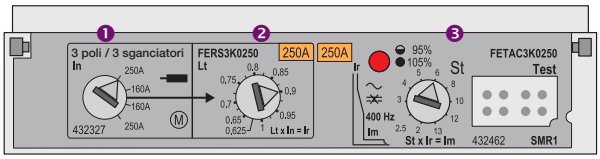

ST or Im setting
Is set in multiples of the LT current setting and has a setting of 2 to 13 x this value with 10 setpoints.

Other Protections
Each SMR1 is equipped with a Instantaneous short circuit protection device set at 14 x Ict (= Trip Unit rating). This hi speed tripping device will not react to the first short circuit peak but will only initiate a trip signal after a second short circuit peak is detected. Discrimination is thus always ensured.

All Record Plus devices are equipped with a HIOSC (hi set Instantaneous) protection device. This device mechanically trips the breaker when a short circuit is detected of a value exceeding the capabilities of the breaker in which it is installed and initiates a current limiting interruption of the fault.

The combination of these two protection devices and the unique current limiting propeties of the Record Plus breaker improve Selectivity whilst maintaining Current Limitation.

Setting Examples
Example
A line protection device; required overload or **LT** setting 120A, short-circuit or **ST** setting 6 x the LT setting.
SMR1 of 250A + switchable rating plug of 250A.
LT setting .....knob 1 set to line and 160A
.....knob 2 set at 0.75 (0.75 x 160 = 120A)
ST setting .....knob 3 set a 8 x (=8 x 120)
SMR1 of 250A + adjustable rating plug of 160A.
LT setting .....knob 2 set at 120 (value on scale)
ST setting .....knob 3 set a 8 x (=8 x 120)

A line protection device; required overload or **LT** setting 280A, short-circuit or **ST** setting 6 x the LT setting.
SMR1 of 400A + switchable rating plug of 400A.
LT setting .....knob 1 set to line and 315A
.....knob 2 set at 0.9 (0.9 x 315)
ST setting .....knob 3 set a 6 x (=6 x 280)
SMR1 of 400A + adjustable rating plug of 315A.
LT setting .....knob 1 set at 280
ST setting .....knob 3 set a 6 x (=6 x 280)

(1) a Tripping time of 5 seconds can be warrantied at 6 x Ir.

Time Current Curves

FE160 & FE250
Electronic Trip Unit SMR1

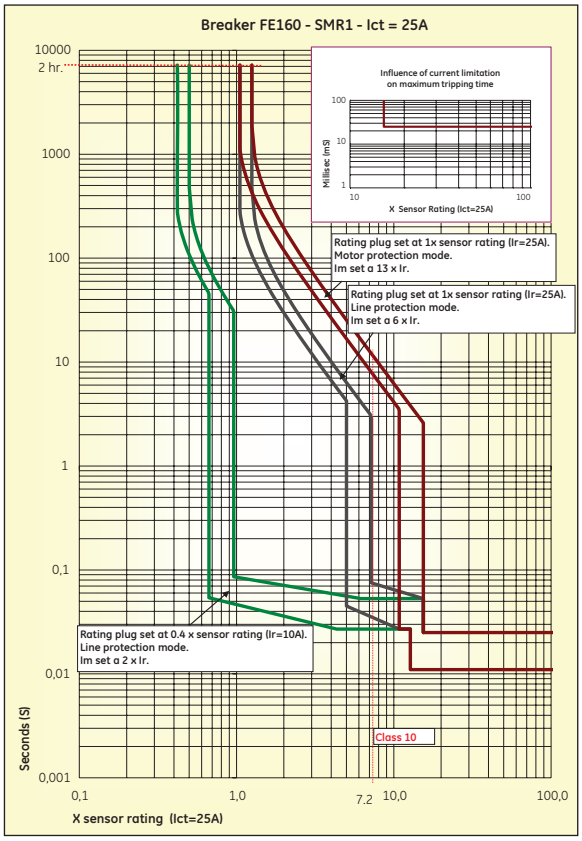

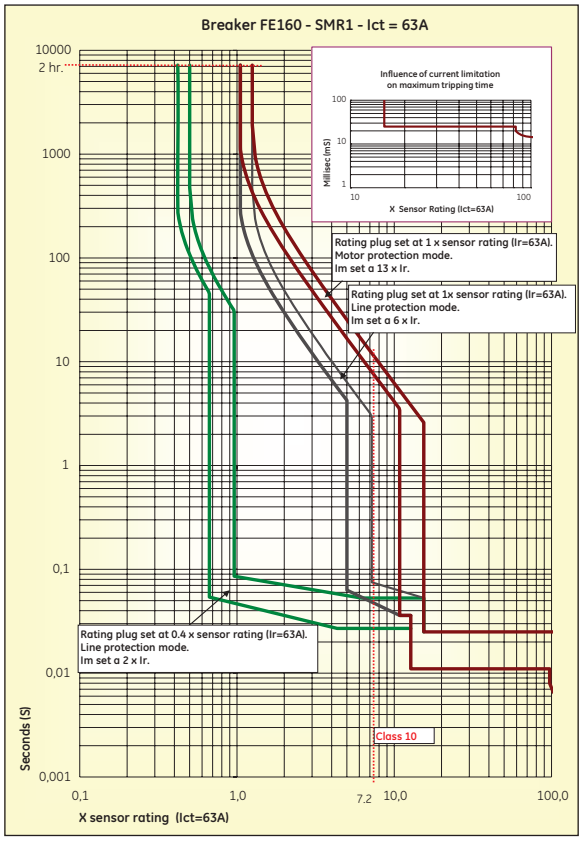

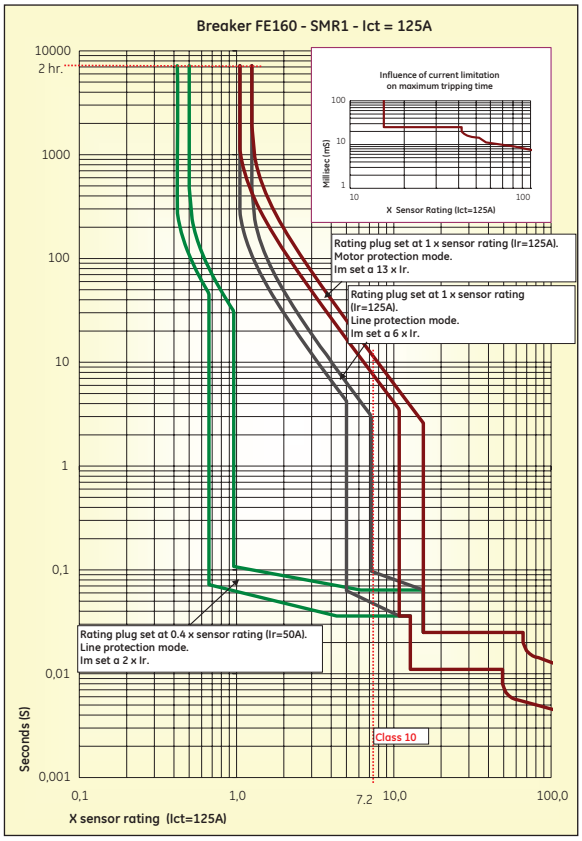

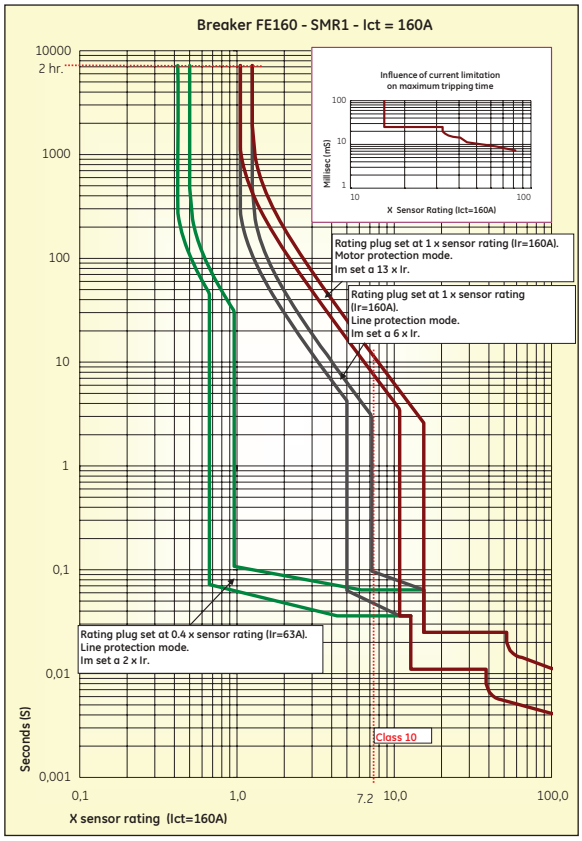

Time Current Curves

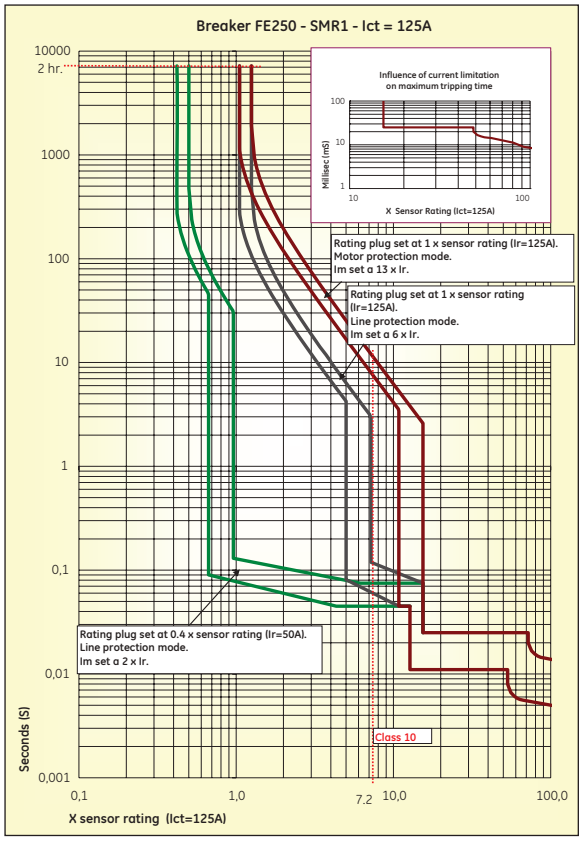

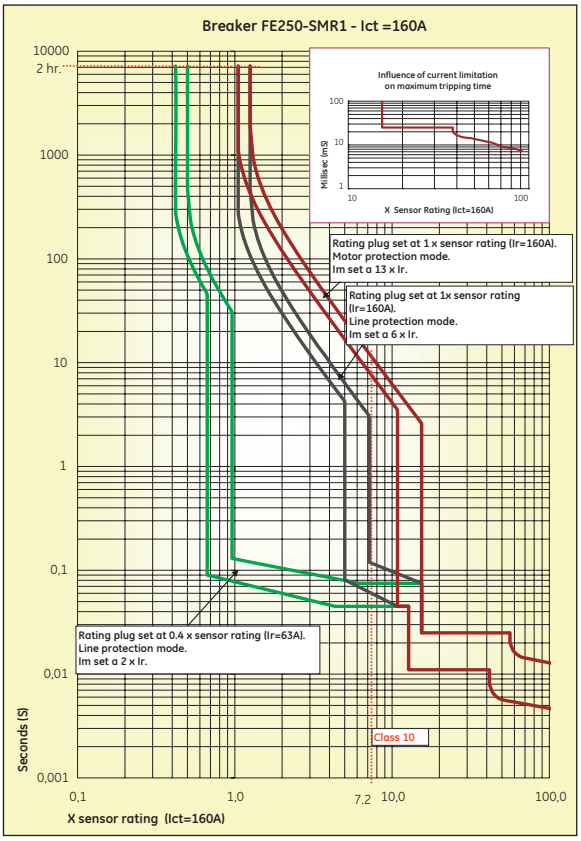

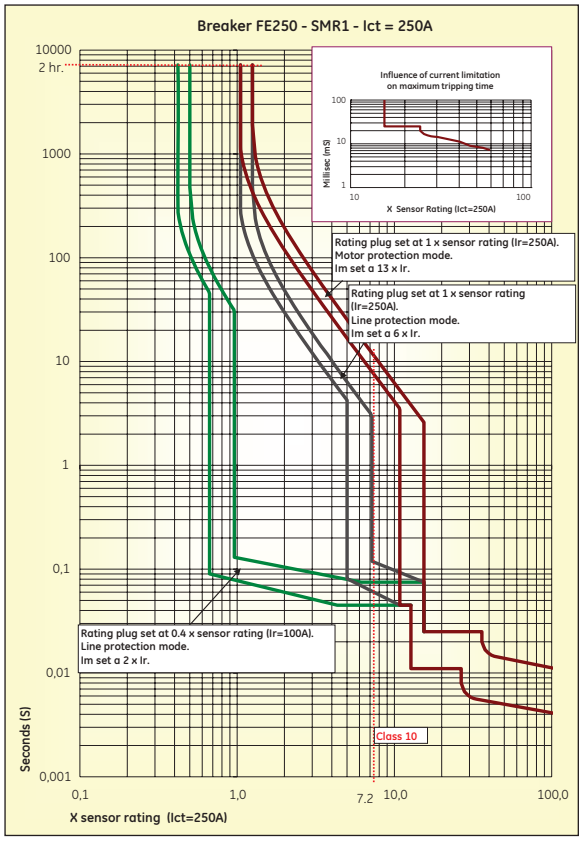

Time Current Curves

FG400 & FG630
Electronic Trip Unit SMR1

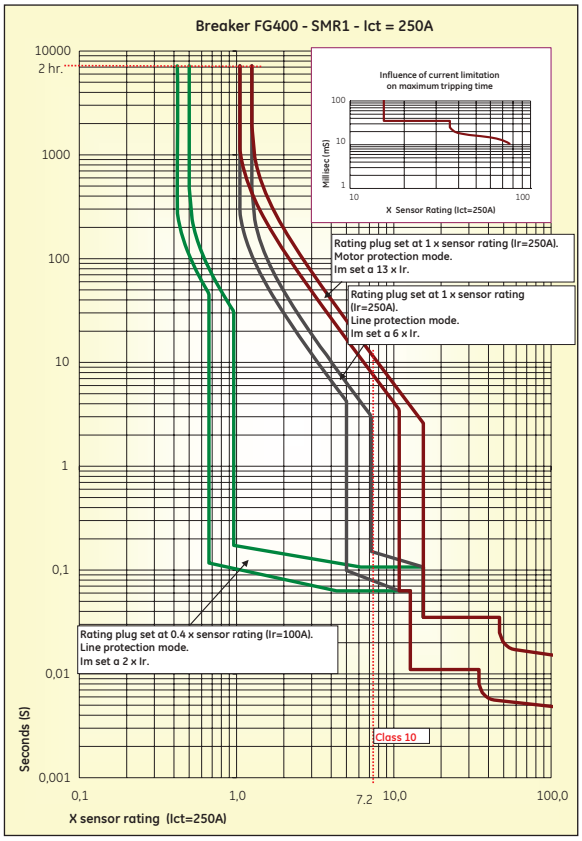

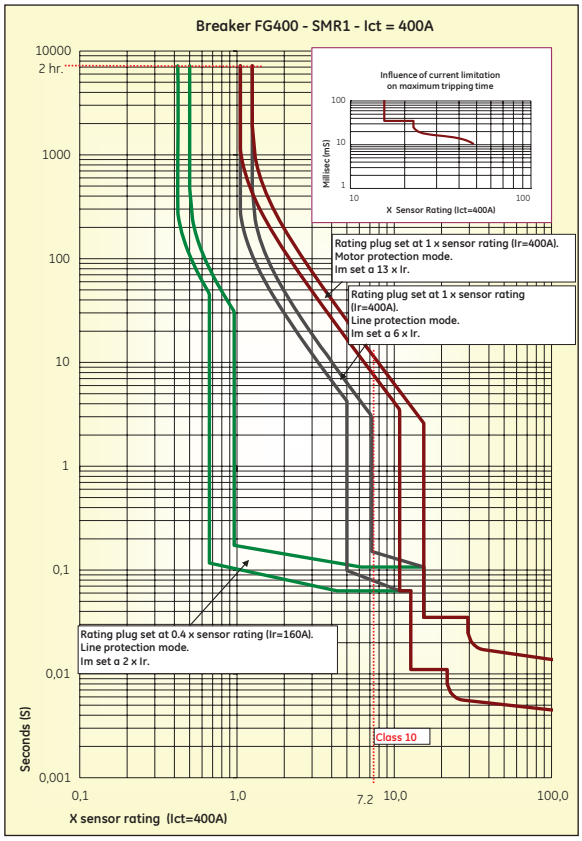

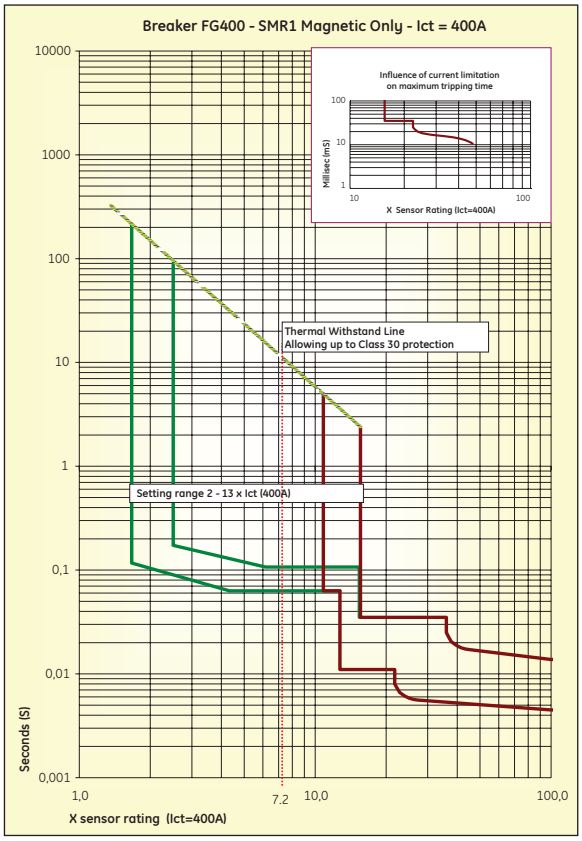

Time Current Curves

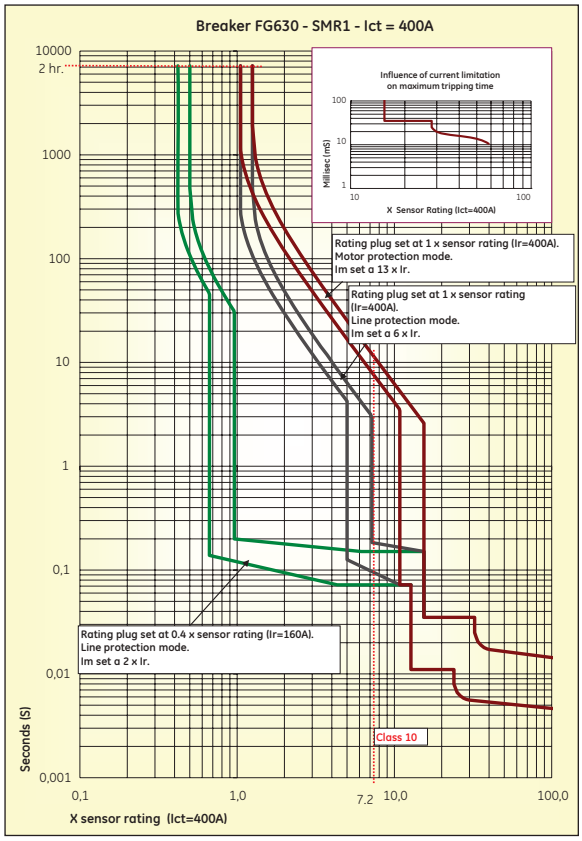

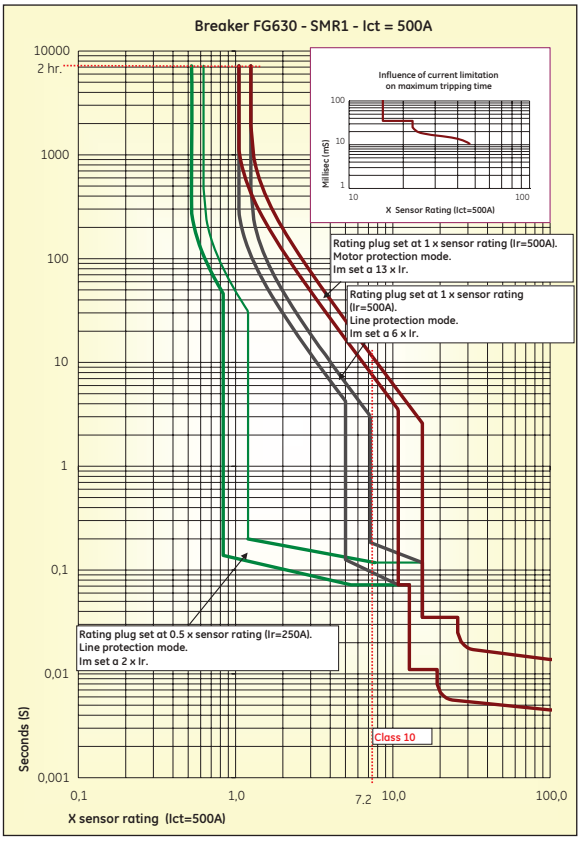

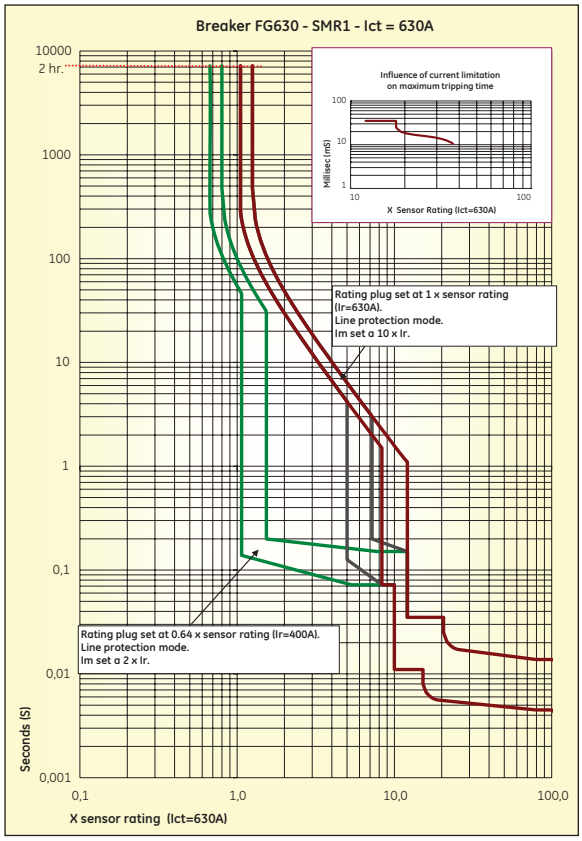

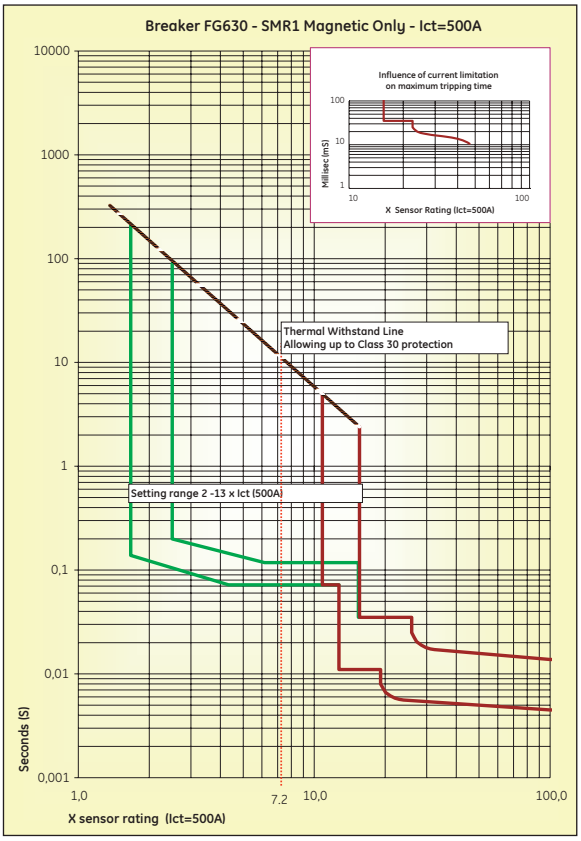

Electronic Trip Units

SMR2 range

The SMR2 is an electronic trip unit offering a fixed set of sophisticated protective functions that can be extended at will by the addition of seperately available modules. Designed for use with the FG400 and FG630 frame sizes the device has a fixed set of 3 protective functions allowing a selective and fully adjustable protection against Overloads (**LT**) and short-circuits (**ST** and **I**).
Both the **LT** and **ST** protection can be set to different time settings or bands (**LTD** and **STD**) whilst the ST device can be switched to a energy protection mode (I^2t).
The SMR2 uses rating plugs that give the user the flexibility to make a last minute choice in the required current rating, protected poles or protection band.
A 24V DC auxiliary supply can be connected to the trip unit via the contact module. This enabling all modules to be used to their full capacity and allowing the use of the ZSI function (if installed in the trip unit).

Overload protection LT (long time)
The **L**ong **T**ime or overload protection is adjustable from 0.4 (0.64[(1)]) to 1 x the chosen sensor ratings in 16 (32[(1)]) steps. The user can also define one of 6 time bands (**LTD**) each designed to match specific loads, motor or cable characteristics. Of these 6 time band settings, 4 have time bands for line applications and 2 are dedicated to motor protection (for time band classes see EN 60 947-4.1). When set to motor protection mode, a phase loss protection is initiated

that will trip the breaker when the difference in current between one phase current and the other phases exceeds 80% for more than two seconds.
This easy-to-adjust trip unit is equipped with a LT load indicator device that operates by means of two LED indicators located on the trip unit front face. If the load reaches a 60% of the set Ir value, a **green LED** will start to blink (3 flashes a second). When the load reaches 75% of Ir it will stop blinking and remain on. The second **orange LED** will start to blink at 95% of the Ir value. It will remain on when the load reaches 105% of Ir and a trip is imminent.

All SMR2 trip units have a built-in temperature sensor that trips the breaker at temperatures above 90°C. It thus prevents the breaker and electrical components in its immediate vicinity from overheating. The SMR2 is also equipped with a so called thermal memory device. This memory tracks overheating even after the device has tripped and prevents the breaker from being switched whilst its environment is still at a too high temperature.

Short-circuit Protection ST (short time)
Offerering a selective protection against low value short-circuits the **S**hort **T**ime protection is settable from 1.5 to 12[(2)] x the adjusted LT protection (Ir). The device can be set to five time setting bands (**STD**), this allowing selectivity between different breaker sizes.
The **STD** device can be set to an 'energy curve mode'. This mode changes the fixed delay and reaction time value of the device, when the set current level is reached, into a reaction time that depends on the energy flowing in the circuit.

Short-circuit Protection I (instantaneous)
Offerering a protection against short-circuits the Instantaneous protection is settable from 2 to 13[(3)] x the chosen sensor rating.

This hi speed tripping device will not react to the first short circuit peak but will only initiate a trip signal after a second short circuit peak is detected. Discrimination is thus always ensured.

All Record Plus devices are equipped with a HIOSC (hi set Instantaneous) protection device. This device mechanically trips the breaker when a short circuit is detected of a value exceeding the capabilities of the breaker in which it is installed and initiates a current limiting interruption of the fault.

The combination of these two protection devices and the unique current limiting propeties of the Record Plus breaker improve Selectivity whilst maintaining Current Limitation.

Each SMR2 trip unit comes with a transparent, tamper-free (sealable) cover, this to prevent unauthorized manipulation of the breaker settings. They are supplied as a simple to mount, plug-in electronic pouch (current sensors supplied with the breaker). The device is supplied with an actuator with flux shifter that fits into a pocket in the breaker housing and is then connected to the trip unit. Without a mounted and connected actuator coil the breaker will not function. In order to verify a correct operation of the combination a simple device is available to test the assembly. **We strongly recommend the use of this test device.**

(1) Normaly supplied with two rating plugs, each with a setting range of 0.64-1.
(2) Some types limited to 10 x
(3) Some types limited to 11 x

SMR2 range

FG400 & FG630 Advanced Electronic Trip Unit SMR2

Each SMR 2 device has three plug in elements of which at least two are needed to allow the device to work properly.
1) A rating plug is plugged into the jack at the top left of the device. Without rating plug the SMR2 device will not provide any circuit protection and the breaker will trip immediatley.
2) A battery(1) module (supplied with trip unit) needs to placed in the appropiate module this to power the thermal memory within the trip unit when the breaker has tripped. If not installed the thermal memory function is disabled. The battery module also enhances the functionality of the Trip Reason Indicator Module.
The third, and optional, plug in module is:
3) An Extension module providing extra functionality and/or features. A standard SMR2 is supplied with a blank non function module.

Adjustable rating plug
An SMR2 rating plug has two setting knobs. The first is used for the setting of the overload current device (LT) and has a setting range of 0.625 to 1 x the chosen rating over 16 setpoints. The settings on the devices are in current values thus avoiding the use of complicated multipliers. The second knob is used to set the time delay band of the overload protection (LTD) and has 6 possible time settings.

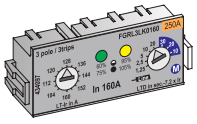

Each trip unit size can be equipped with one of two available adjustable rating plug types.
There is a version of the trip unit without rating plug and one in which the two rating plug types are included. For 4pole trip units the rating plugs exist in 3 and 4pole protected versions with a choice in neutral rating between 50 or 100% of the phase value.

FG frame					Electronic trip unit overview											
					In	LT			ST			I			Neutral protection		
						pick-up band 1.05÷1.2 Ir			pick-up band ± 20% Ist			pick-up band ± 10% Ii					
					(A)	Ir setting	min (A)	max (A)	Ist setting	min (A)	max (A)	Im setting	min (A)	max (A)	4P4T	4P 3TN	4P3T
SMR2 + adjustable rating plug	N	H	L	FG400	160	0.4-1 In 32 steps Utilising two Rating Plugs	100	160	❸ 1.5-12 Ir 10 steps	150	1920	❺ 2-13 Ict 10 steps	500	3250	=Ir	=Ir/2	not protected
					250		160	250		240	3000		700	4550	=Ir	=Ir/2	
					250		160	250		240	3000				=Ir	=Ir/2	
					350		250	350		500	3500				=Ir	=Ir/2	
					400		250	400	1.5-10 Ir 10 steps	375	4000	2-11 Ict 10 steps	750	4400	=Ir	=Ir/2	
				FG630	400		250	400	1.5-12 Ir 10 steps	375	4800	2-13 Ict 10 steps	1000	6500	=Ir	=Ir/2	
					500		400	500		600	6000				=Ir	=Ir/2	
					630		400 ❶	630	1.5-10 Ir 10 steps	600	6300	2-11 Ict 10 steps	1260	6930	=Ir	=Ir/2	

LTD, Line no phase loss			STD Standard		
Setting(1)	min (sec.)	max (sec.)	Setting	min (sec.)	max (sec.)
1.25	1	1.5	0.04	0.036	0.07
2.5	1.5	3	0.12	0.108	0.16
5	3	5	0.21	0.190	0.26
10	6 ❷	10	0.31	0.280	0.37
LTD, Motor with phase loss protection(1)			0.42	0.380 ❹	0.49
				-OR- I^2T	
20	10	14		(see trip curves)	
30(2)	14 ❷	20			

(1) Timing applies at 7.2 x the set current value. (Ir)
(2) Not applicable for 400 & 630A

SMR2 front view

Indicating the location of the settings, the battery, rating plug and extension modules. The in/out put terminals are located within the trip unit pouch just below the battery modules and can be accessed by removing a break away cover.

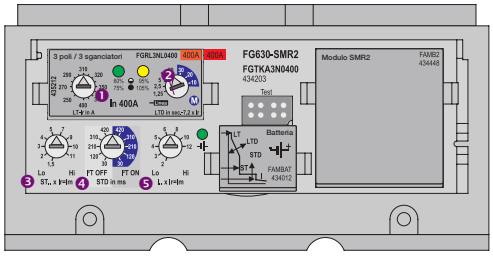

On switching to Motor Protection a phase loss protection is initiated.
Do not use for line protection.

The indicated timings are valid in cold state. Warm state timings take into account the heating of the installation due to current flow and are lower.

(1) Expected life span under normal circumstances three to five years. Replacement type 2 x BR1220 or equivalent.

SMR2 range

FG400 & FG630 Advanced Electronic Trip Unit SMR2 (continued)

Modules
Each SMR2 device can be equipped with two plug-in elements, a rating plug and an extension module. The extension modules are simple plug-in devices that allow the user to enhance the SMR2 as a protective device or to add in extra functional features. There is a single function module available with Ammeter and a range of functional modules each adding two functions to the device. this allows an SMR 2 to be equipped with:

Ground fault Protection
Ground fault alarm
Load shedding across two channels
Trip Reason indicators
Communication (modbus RTu)
Each module has a low level electronic output that can be channeled through the communication bus (when present) or in some cases trigger a 1A/250 Volt change-over contact placed in an external contact module containing four contacts (type FAECM2).

Ground fault protection
Designed for protection against indirect contact, the ground fault device measures the vectorial sum of the three phase currents and, if present, that of the neutral conductor. If the sum of these values exceeds the set current thresholds for a period of time greater than the set time delay, the breaker is tripped.
The **G**round **F**ault protection option is adjustable from 0.2 to 1 x the chosen sensor ratings in 9 steps. The user can also define one of 5 delay time bands (**GFD**) designed to allow selectivity between different sensor ratings.
The **GFD** device can be set to an 'energy curve mode'. This mode changes the fixed delay and reaction time value of the device, when the set current level is reached, into a reaction time that depends on the energy flowing in the circuit.
A breaker trip due to a ground fault event can be channeled through the communication output (when present) or be wired out to the contact module. (type ECM)

Ground fault alarm
The **G**round **F**ault **A**larm option offers the same functionality as the Ground Fault protection, here however **ONLY** an alarm signal is given and the breaker is **NOT TRIPPED**. It is adjustable from 0.2 to 0.8 x the chosen sensor ratings in 12 steps. The user can also define one of 5 delay time bands (**GFD**).
The **GFD** device can be set to an 'energy curve mode'. This changes the fixed delay and reaction time value of the device, when the set current level is reached, into a reaction time that depends on the energy flowing in the circuit.

A 100mA/240Volt NC contact is included in the module and can wired out through the 12 pole breaker connector plug on the breaker.

Load shedding device
The Load Shedding device (**R**) is designed to allow the user to switch off non priority loads before the **LT** function trips the breaker due to an overload. It measures the current within the circuit and provides a signal if the current measured in the three phases exceeds the set current values. The device has two channels, both adjustable from 0.55 to 1 x the set **LT** protection value (Ir).
Each channel is equiipped with a time delay directly proportional to that of the **LTD** setting. Chanel 1 is set to a time delay equal to **LTD**/2 and channel two is set to a time delay of **LTD**/4. If the current drops below the set thresholds the signal is reset. The reset signal being given in a time proportional with the chosen LTD curve.
A signal due to a load shedding event can be channeled through the communication output (when present) or be wired out to the contact module.
(type ECM)

Trip Reason Indicators
In order to indicate the reason of a breaker trip a set of tptal of three LED's are provided on the trip unit front face. One indicating a trip due to the **LT** device, one indicating a trip due to the **ST** device and one for the **I** device.
Without auxilliary power, the use of the trip reason button is necessary to light up the appropiate **LED**.
With auxilliary power the use of the trip reason push button is unnecessary.
The three trip signals can be channeled through the communication output (when present) or be wired out as an overload (LT) or short circuit signal (ST & I) to the contact module (type FAECM)

Communication
When the communication option is added to the SMR2 trip unit the following data can be viewed:
- The position of the switches on all installed devices, thus providing the settings of the breaker.
- Signals indicating on which of the installed protection devices the breaker has tripped.
- Load shedding orders.
- Zone selective interlock occurrences.

For each breaker with Modbus rtu the use of a internal communication module AND and external contact module type FAECM2 (see page b.28) is required.
A 24V DC auxiliary supply is needed that supplies the system through the external contact module.

Zone Selective Interlock
A device that allows the user to achieve selectivity combined with the fastest possible fault reaction time. When the **ZSI** is active the SMR2 trip unit will always trip the breaker as quickly as possible, ignoring the time delays set by means of the **STD** or **GFD** devices. However, when a **ZSI** signal is received from a down-stream breaker equipped with an SMR2, the **STD** or **GFD** of the upstream SMR2 device revert to wherever the adjustment is set.

With standard cables the distance between breakers is a maximum of 30 meters. The use of shielded cables allows the distance between breakers to be increased to 1 km. A maximum of five SMR2 trip units can be linked in this manner.

The ZSI option requires a 24VDC auxiliary supply. One FAECM2 module connected with one of the breakers in the ZSI loop can be used. The FAECM2 needs then connected to an auxiliary supply of 24V DC.
When the breaker is equipped with a "COM" option the ZSI status signal is also available on the communication output.

Ammeter
Provides the user with the current running in one of the breaker phases. The device has an accuracy of 10% and normally indicates the current in the highest loaded phase. Use of the push buttons on the module front allows the user to select an indication of the current in one of the other phases or neutral (if present). After a set delay of 10 seconds the device reverts to its standard indication setting.

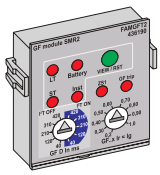

Module FAMGFT2
A combination of the Ground Fault protection and the Trip Reason indicators.

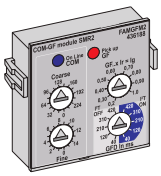

Module FAMGFM2
A combination of the Ground Fault protection and the communication option.

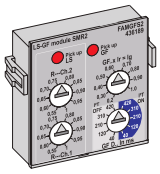

Module FAMGFS2
A combination of the Ground Fault protection and the load shedding device.

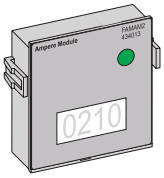

Module FAMAM2
An Ammeter.

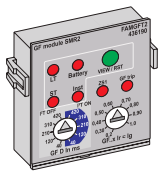

Module FAMGAT2
A combination of the Ground Fault Alarm function and the Trip Reason Indicators.

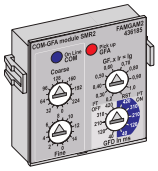

Module FAMGAM2
A combination of the Ground Fault alarm function and the communication option.

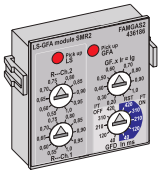

Module FAMGAS2
A combination of the Ground Fault alarm option and the load shedding device.

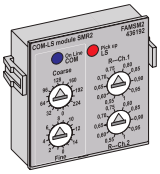

Module FAMSM2
A combination of the load shedding device and the communication option.

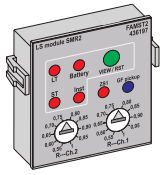

Module FAMST2
A combination of the load shedding device and the Trip Reason Indicators.

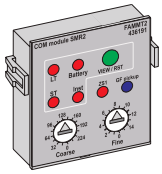

Module FAMMT2
A combination of the comunication option and the Trip Reason Indicators.

Time Current Curves

FG400 & FG630
Electronic Trip Unit SMR2

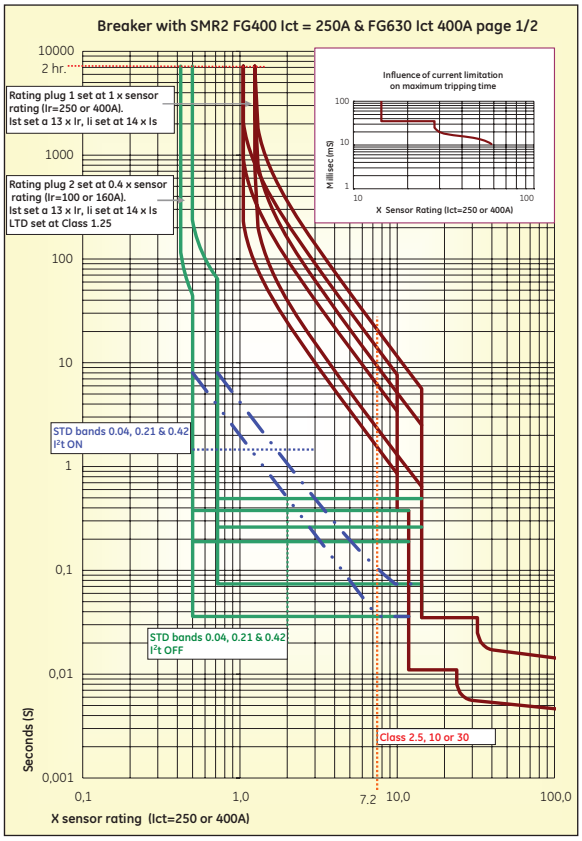

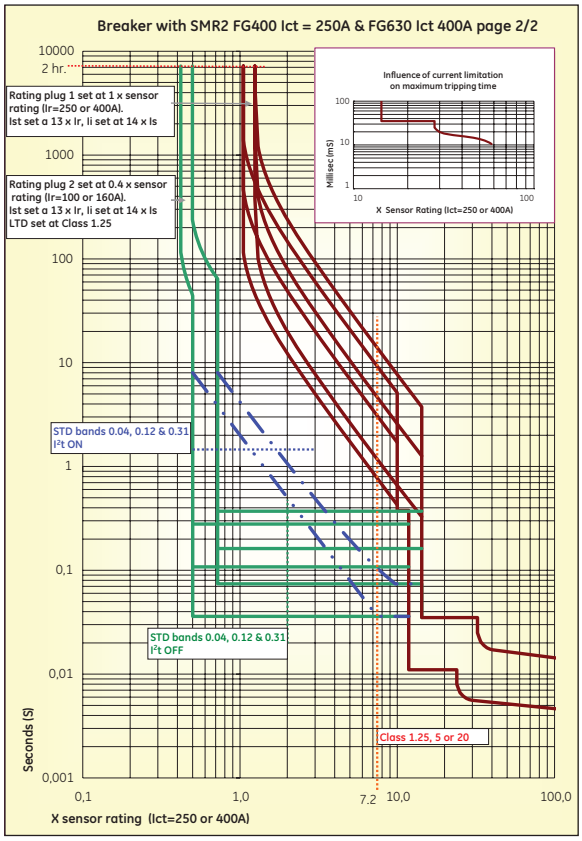

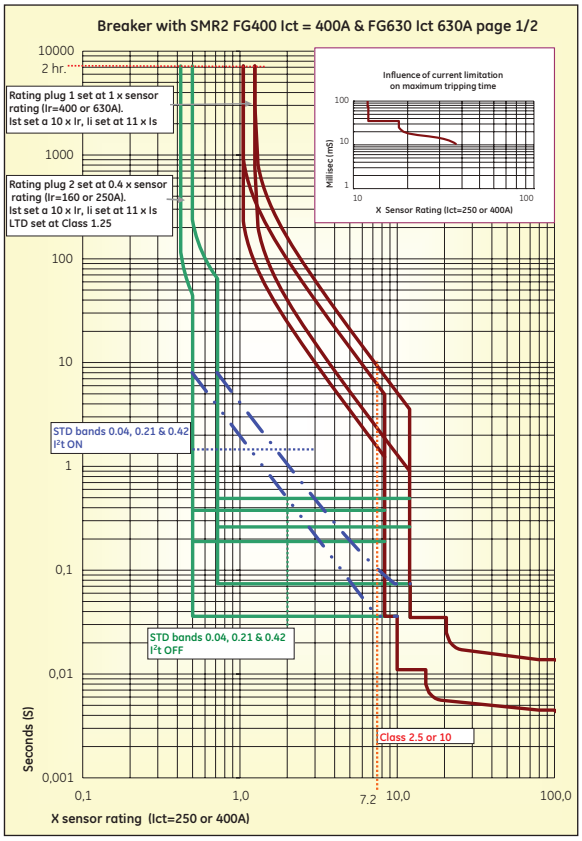

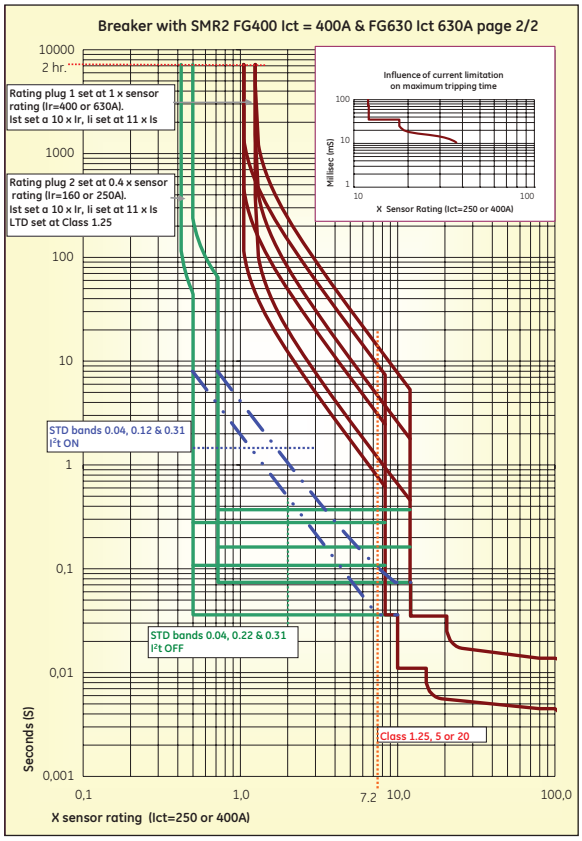

Time Current Curves

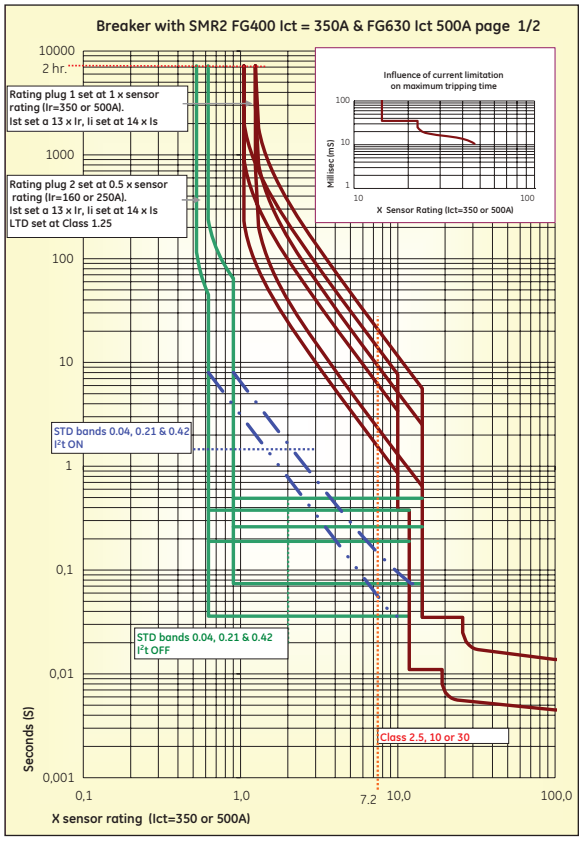

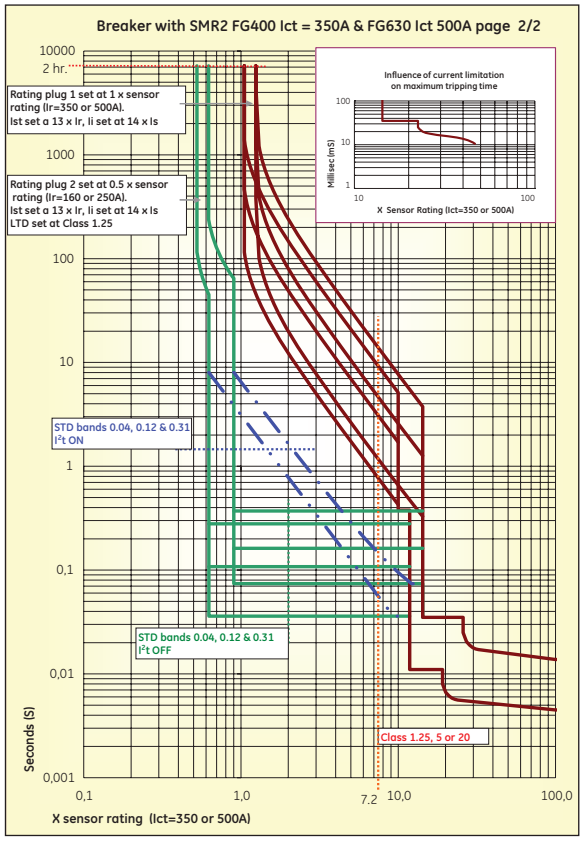

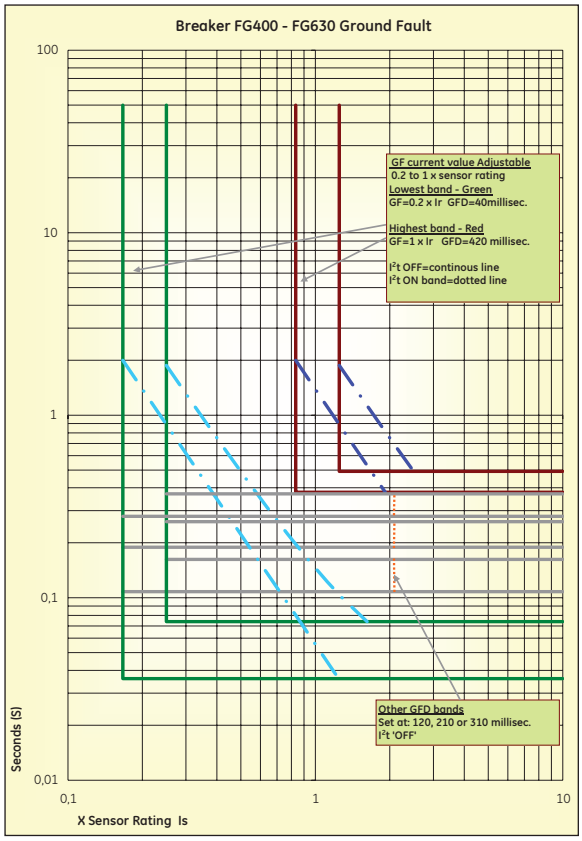

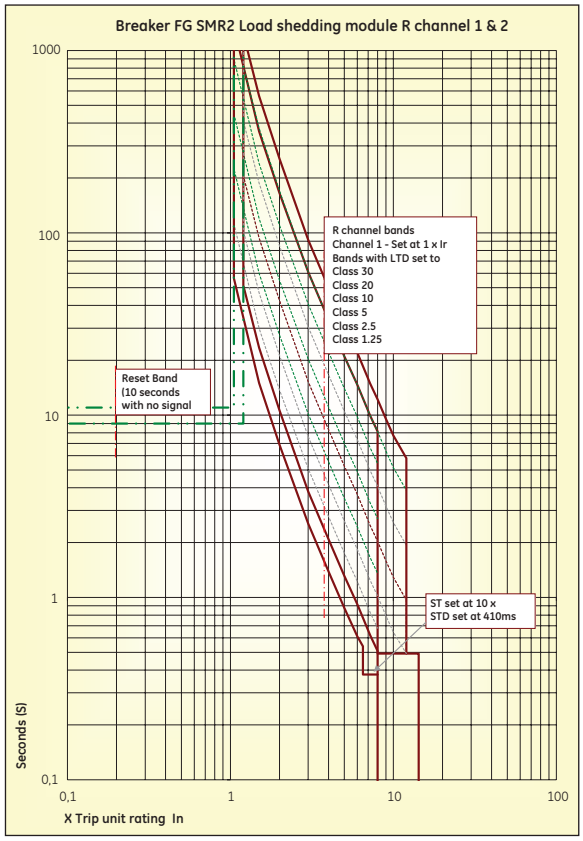

Electronic trip units

FK800 - FK1600 Electronic Trip Unit SMR1e, s & g

Non inter changeable electronic Trip Units designed to allow the user to conveniently tailor the protection device to match individual circuit requirements. The available options include adjustable overload pickup values, overload trip time characteristics, short time pick-up circuit values, short time delay circuit trip times and energy values. The trip unit can be equipped with a ground-fault protection and provides a flexible solution to all protection scenarios.

This easy-to-use trip unit with overload and selective short-circuit protection is equipped with an overload signalling option and has a built-in temperature sensor to prevent the breaker and electrical components in its immediate vicinity from overheating. The 4 pole units are equipped with a switchable neutral protection option, allowing the user to set the neutral at 0,50 or 100% of the phase ratings.

Overload Protection (LT or Long Time)
Designed to meet the newest IEC 60 364 installation regulations all variants can trip the breaker with 5 seconds at 8 times the LT setting (Ir). The SMR1e is supplied with this 5 second time band whilst the SMR1s and g variants have 4 selectable time bands that trip the breaker within 5, 10, 20 or 30 seconds. The device is adjustable from 0.4 to 1 x the breaker (In) or Ict rating in 9 steps.

All SM1e, s or g trip units have LED's indicating that the Trip unit has powered up (green) and a second LED that provides information on a imminent tripping event. This LED flashes at three times a second when the current reaches 95% of the breaker setting (Ir) and will remain fully lit when 105% of this values is reached. If the temperature in the electronic circuits reaches 75 degrees centigrade both LED's light up simultaneously whilst a trip is initiated once the temperature exceeds a 90 degree centigrade limit.

A third LED located in the vicinity of the LT setting knob indicates a breaker trip on an overload event.

Timed Short Cicuit Protection (ST or Short Time)
Offering a selective protection against low value short-circuits the **S**hort **T**ime protection is settable from 1.5 to 10 x the adjusted LT protection (Ir).
The SMR1e has a fixed time band of 100 millisecond`s.
A setting that allows discrimination with downstream FG devices.
Tthe SMR1s and g variants have a choice of four time setting bands (**STD**), designed to allow selectivity between different breaker sizes. Here the **STD** device can be set to an 'energy curve mode' that changes the reaction of the device from a fixed delay and reaction time value when the set current level is reached to a reaction time that depends on the energy flowing in the circuit.

HIOSC Tripping Device (If setting)
All Record Plus devices are equipped with a HIOSC (hi set Instantaneous) protection device. This device mechanically trips the breaker when a short circuit is detected of a value exceeding the capabilities of the breaker in which it is installed and initiates a current limiting interruption of the fault.

This device once combined with unique current limiting propeties of the downsteam Record Plus breaker provide a high level of Selectivity whilst maintaining Current Limitation.

Ground Fault Protection (GF)
Designed for protection under fault conditions the ground fault device measures the vectorial sum of the three phase current and, if procent, that of the neutral conductor if the sum of these values exceeds the set current thresholds for a period of time greater than the set time delay, the breaker is tripped.
The **G**round **F**ault protection option is adjustable from 0.2 to 1 x the chosen breaker rating (Ict) in 9 steps. The user can also define one of 4 delay time bands (**GFD**) designed to allow selectivity between different sensor ratings. The groundfault device is available in the SMR1g trip unit type.

Zone Selective Interlock
A device that allows the user to achieve selectivity combined with the fastest possible fault reaction time. With connected ZSI the SMR1s and SMR1g trip unit will always trip the breaker as quickly as possible, ignoring the time delays set by means of the **STD** or **GFD** devices. However when a **ZSI** signal is recieved from a downstream breaker equipped with an SMR1 s, 1g or 2 the **STD** or **GFD** of the upstream device are reset to the previously ignored original GFD & STD timings. The Ground Fault and Short Time Zone Selective Interlock signals are shared on one in/out put .
The device only works when auxiliary power is present and operates up to a distance between breakers of 1 kilometer. The use of shielded cable is required. A maximum of five SMR 1s, g or SMR2 trip units can be linked in this manner. (not available in the SMR1e)

Connection of trip unit

Each SMR1s & G Trip Unit has a connector located on the right side of the breaker. This connector is normally hidden behind a breakaway cover and is required to connect the following:
Auxiliary power supply (24V DC), ZSI in and out,
long time pre-alarm signal, connection of external CT for 4 pole groundfault on three pole breakers.

SMR1e, s & g Range

FK800- FK1600 Electronic Trip Units

Trip Units are available in 4 ratings and 3 different versions depending on the frame rating and the chosen functionality.

FK800 frame size 50/60 Hz	800A
FK1250 frame size 50/60 Hz	1000 & 1250A
FK1600 frame size at 50/60Hz	1600A

In order to verify the correct operation of the breaker an Trip Unit a PC based software packge is available.

We strongly recommend the use of this option.

FK800, FK1250 and FK1600 breakers - Electronic trip unit overview

FK frame					Electronic trip unit overview									
					In	LT pick-up band 1.05÷1.3 Ir			ST pick-up band ± 20% Im			Neutral protection Switchable type		
					(A)	Ir setting	min (A)	max (A)	Im setting	min (A)	max (A)	4P4T	4P 3TN	4P3T
SMR 1e	N	H	L	FK800	800	0.4-1 x In in 9 steps	320	800	1.5-10 Ir in 9 steps	480	8000	=Ir	=Ir/2	not protected
				FK1250	1000		400	1000		600	100000	=Ir	=Ir/2	
					1250		500	1250		750	12500	=Ir	=Ir/2	
				FK1600	1600		640	1600		960	16000	=Ir	=Ir/2	

					In	LT pick-up band 1.05÷1.3 Ir			ST pick-up band ± 20% Im			Neutral protection Switchable type		
					(A)	Ir setting	min (A)	max (A)	Im setting	min (A)	max (A)	4P4T	4P 3TN	4P3T
SMR 1s	N	H		FK800	800		320	800		480	8000	=Ir	=Ir/2	not protected
				FK1250	1000		400	1000	1.5-10 Ir in 9 steps	600	100000	=Ir	=Ir/2	
					1250		500	1250		750	12500	=Ir	=Ir/2	
				FK1600	1600		640	1600		960	16000	=Ir	=Ir/2	

						LTD(1)			STD(2)		
						Setting	min (sec.)	max (sec.)	Setting	min (sec.)	max (sec.)
SMR 1s	N	H				5	4	6	0	0.015	0.05
						10	8	12	0.1	0.095	0.17
						20	16	24	0.2	0.175	0.29
						30	24	36	0.3	0.255	0.41

					In	LT pick-up band 1.05÷1.3 Ir			ST pick-up band ± 20% Im			Neutral protection Switchable type		
					(A)	Ir setting	min (A)	max (A)	Im setting	min (A)	max (A)	4P4T	4P 3TN	4P3T
SMR 1g	N	H		FK800	800	0.4-1 x In in 9 steps ❶	320	800	1.5-10 Ir in 9 steps ❸	480	8000	=Ir	=Ir/2	not protected
				FK1250	1000		400	1000		600	100000	=Ir	=Ir/2	
					1250		500	1250		750	12500	=Ir	=Ir/2	
				FK1600	1600		640	1600		960	16000	=Ir	=Ir/2	

						LTD(1)			STD(2)		
						Setting	min (sec.)	max (sec.)	Setting	min (sec.)	max (sec.)
SMR 1g	N	H				5	4	6	0	0.015	0.05
						10	8	12	0.1	0.095	0.17
						20 ❷	16	24	0.2 ❹	0.175	0.29
						30	24	36	0.3	0.255	0.41

						GF pick-up band ± 20% Ig			GFD(2)		
						Ig setting	min.(A)	max.(A)	Setting	min (sec.)	max (sec.)
SMR 1g	N	H		FK800	800	0.2-1 x In in 9 steps ❶	160	800	0	0.015	0.05
				FK1250	1000		200	1000	0.1 ❻	0.095	0.17
					1250		250	1250	0.2	0.175	0.29
				FK1600	1600		320	1600	0.3	0.255	0.41

(1) At 7.2 x Ir: Min. is minimum settable delay: Max: Is maximum total tripping time.
(2) At set value: Min. is minimum settable delay: Max: Is maximum total tripping time.

Trip units are available in 4 ratings and 3 different versions depending on the frame rating and the chosen functionality.
FK800 frame size
800A, SMR 1e, s or g
FK1250 frame size
1000 and 1250A,SMR 1e, s or g
FK1600 frame size
1600A,SMR 1e, s or g
The trip units are an integral part of the breaker and are NON interchangeable.

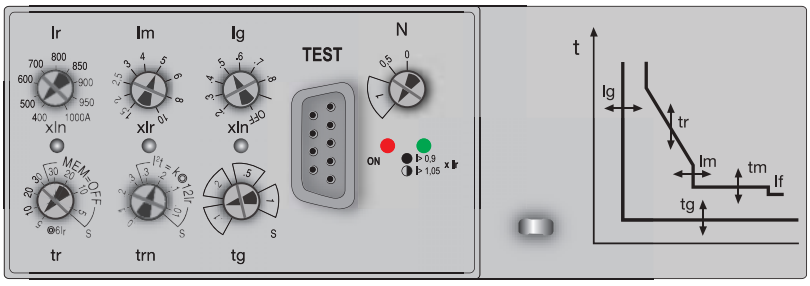

Time Current Curves

FK800 - FK1600
Trip Units SMR1e, s & g

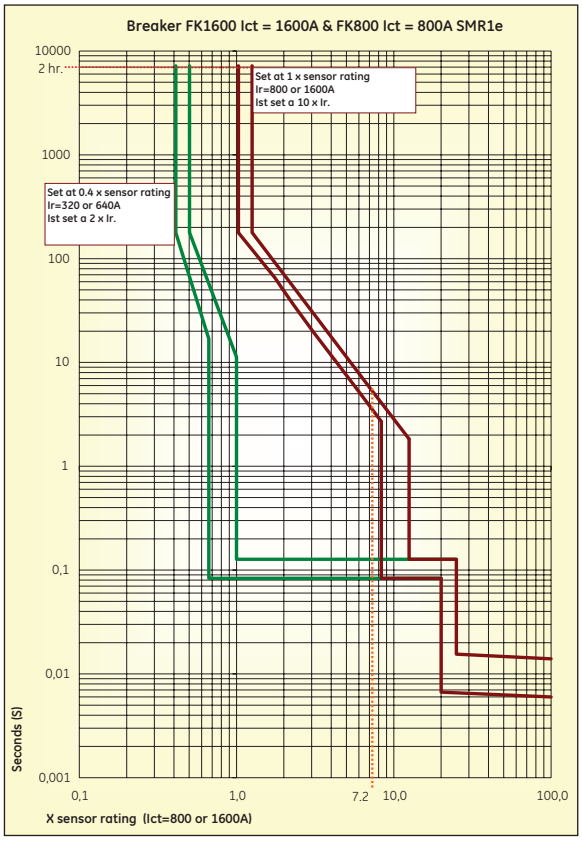

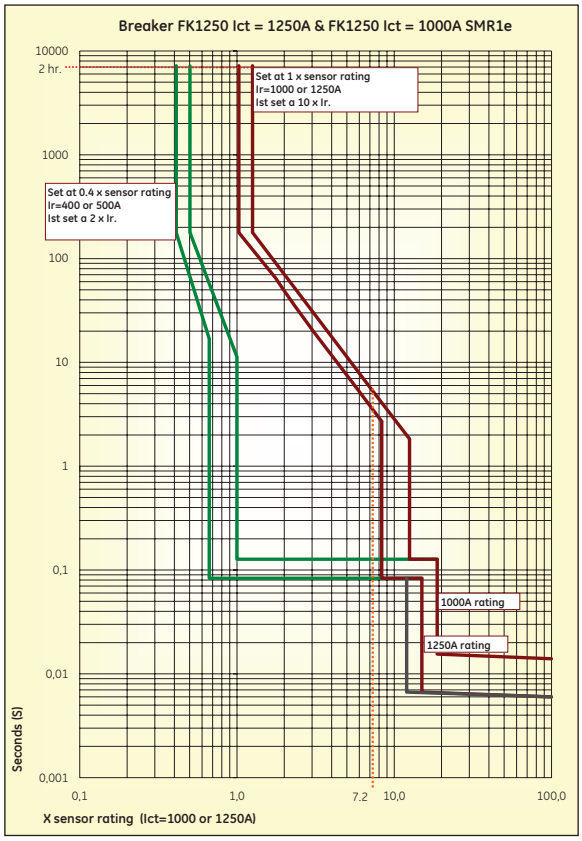

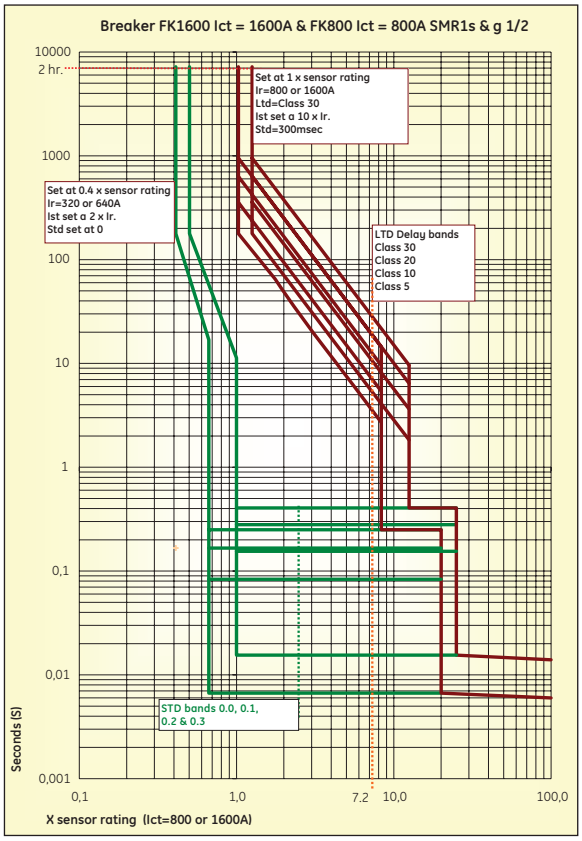

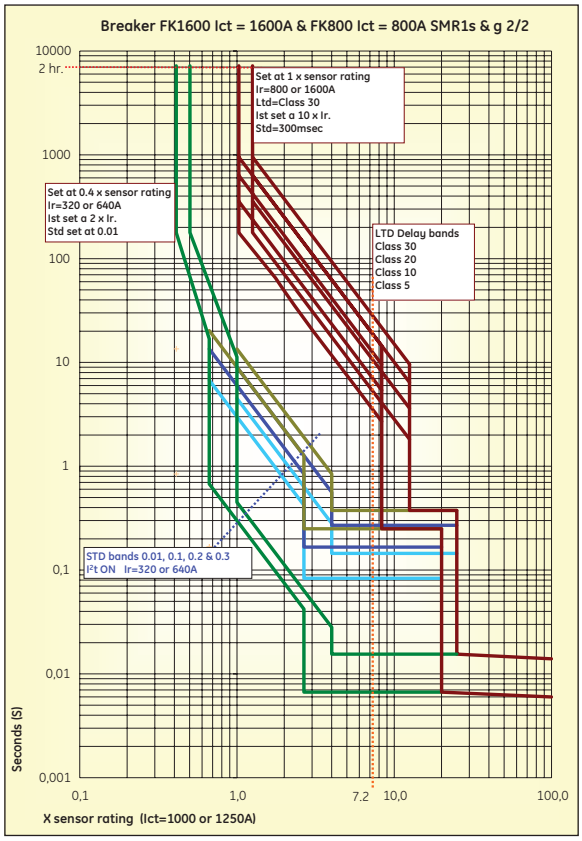

Time Current Curves

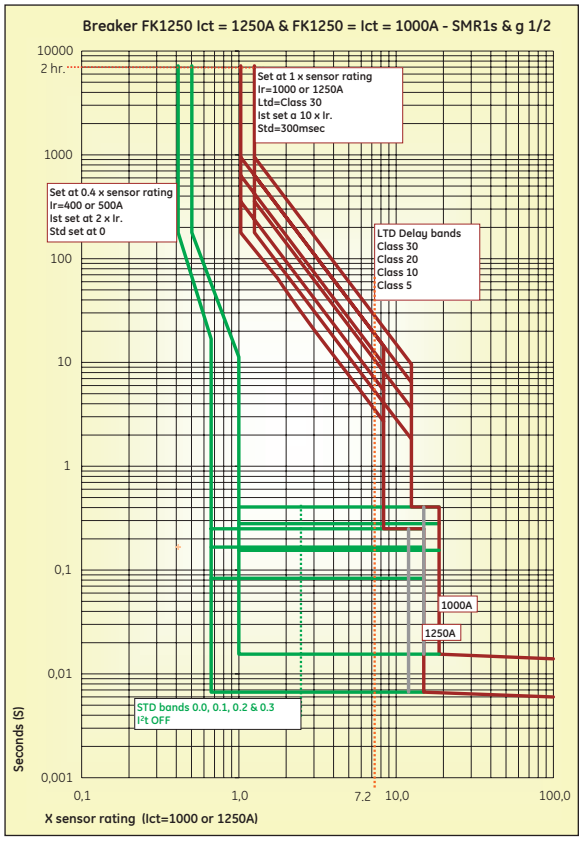

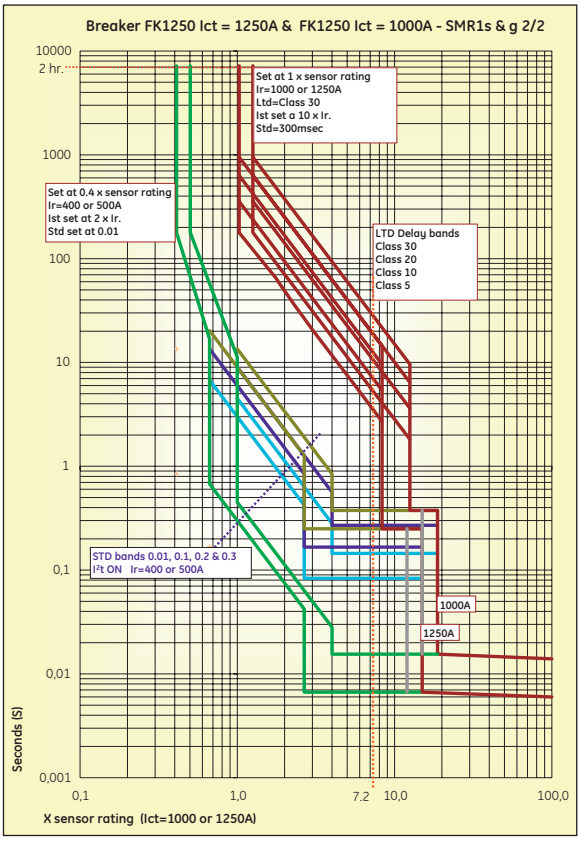

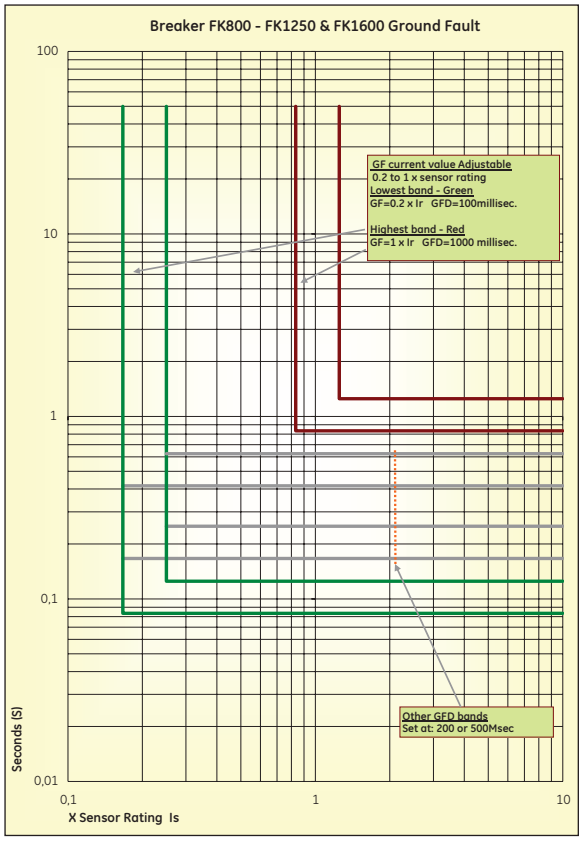

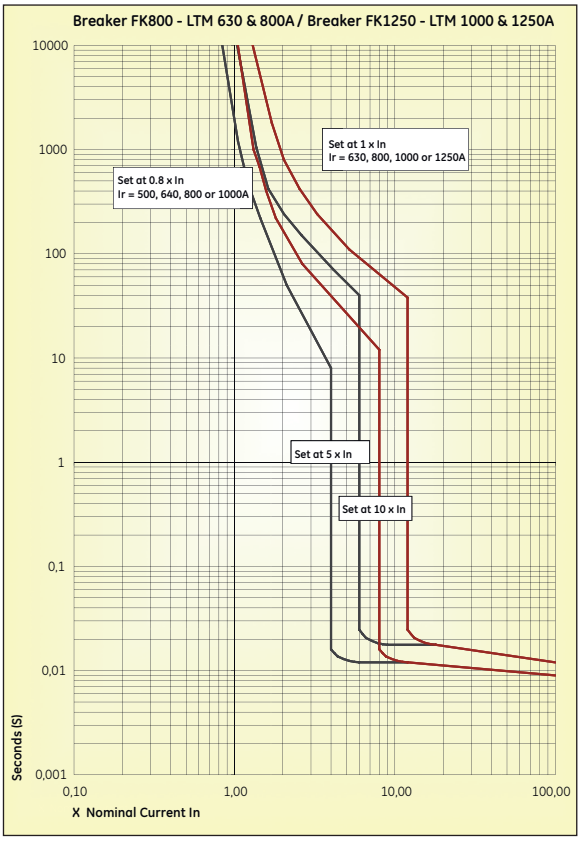

Electronic Trip Units

Accessories for SMR1 and SMR2 types

Long time module SMR1 (FAMLT)(1)

This external DIN-rail mounted device with modular dimensions is directly connected to the SMR1electronic trip unit. The device is equipped with a NC 1A/400V AC contact that opens to a signal which indicates that a LT trip will shortly be initiated by the SMR1. The SMR1 emits this before a trip action is initiated. When set to motor protection this occurs 0.5 seconds before the tripping event and at 0.05 seconds when set to line protection. Contact is reset when breaker trips.

Test kit for SMR1 & SMR2 devices (FAZ)

Designed to test the actuator trip unit combinations the device is plugged into the test jack on the trip unit front face. Just remove the test jack cover, insert and plug in the test device. Releasing the push button on the tester FAZ front should now initiate a trip event. The tester requires a 9V battery type 6F22 and is also equipped with a battery status indicator.

Testing the SMR1e, s & g Trip Unit & FK Frame Breakers

A PC based package is available designed to test these combinations. The use of specific GE software and a PC connected to the Trip Unit test jack allows the user to simulate a fault event that should trip the breaker.

Please contact your local GE sales office for availability.

Rating plug tool SMR1 & SMR 2 (FAR)

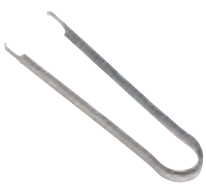

A rating plug can be removed by using two small screwdrivers.
In case of repeated removal the ***Record Plus™*** rating plug removal tool is advised to enhance the ease and safety of this operation.

Communication & contact module SMR2 (FAMECM)

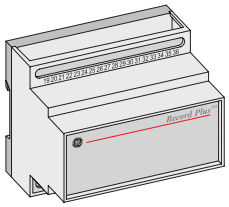

This external DIN-rail mounted device with modular dimensions is directly connected to the SMR2 electronic trip unit. It is a multi functional unit acting as an interface between the breaker and the communication network.
To use the communication option the FAMECM module requires an auxiliary supply of 24V DC.

The device is also equipped with four NC 1A/400V AC contacts that can provide the following outputs:

- Breaker trip reason
  (Overload (LT) **OR** Short Circuit (ST/I)
- Load shedding device contacts.
  Channel 1 **AND** Channel 2

(1) Use of an RC suppressor is recommended.
(See Controls and Automation catalogue)

Trip units

Overview of available types

LTM - Line thermal magnetic

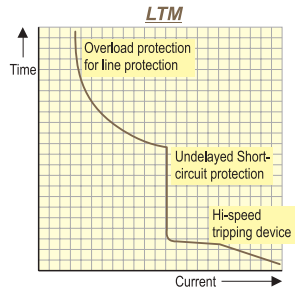

This trip unit offers overload and short-circuit protection.
The overload protection is adjustable from 0.8 to 1 x the chosen rating whilst the short-circuit protection is set at 10 x the chosen rating (FD frame) or adjustable from 5 to 10 x the chosen rating (FE and FK frame).
The unit is designed to protect the lines and/of loads present in standard circuits.

LTMD - Line thermal magnetic, selective type

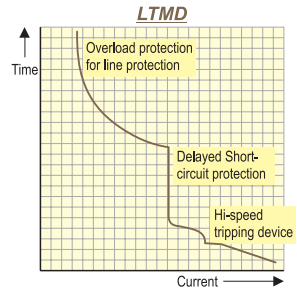

This trip unit offers overload and short-circuit protection.
The overload protection is adjustable from 0.8 to 1 x the chosen rating whilst the short-circuit protection is set at 10 x the chosen rating (FD frame) or adjustable from 5 to 10 x the chosen rating (FE frame).
The unit is designed to offer discrimination with downstream protection devices. It also protects the lines and/of loads present in standard circuits.

GTM - Line thermal magnetic

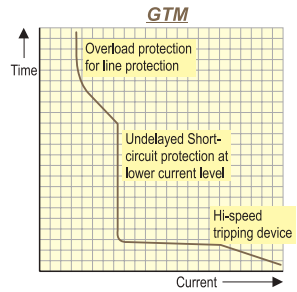

A trip unit de signed to offer overload and short-circuit protection.
The overload protection is adjustable from 0.8 to 1 x the chosen rating whilst the short-circuit protection is set at about 4 x the chosen rating (FD frame) or adjustable from 2.5 to 5 x the chosen rating (FE frame).
Due to its low short-circuit current setting the unit can be used to protect long cable runs or to provide generator protection.

MO - Magnetic Only

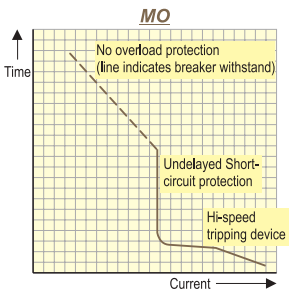

This trip unit offers short-circuit protection only, the device is adjustable from 10 to 15 x the chosen rating. In order to prevent the protection device (Circuit Breaker) from overheating, the current of the circuit that it protects, needs to be limited. (see dotted line)
The unit is primarily designed to be used with thermal relays in motor protection circuits.

SMR1 (e)- Selective Electronic Protection[2]

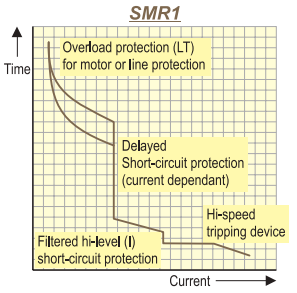

A trip unit designed to offer a overload (LT) and short-circuit protection (ST). The overload protection is adjustable from 0.4 to 1 x the chosen rating and has two protection bands (LTD), one for line protection and one for motor protection (class 10)[1]. To ensure full discrimination the short-circuit protection has a current dependant fixed time setting that varies per frame size.
The device is adjustable from 2 to 13* x the set LT current value.
The unit is designed to protect all circuit types and to offer a high level of discrimination with downstream devices.

SMR2 (1s & 1g) - Enhanced Electronic Protection[2]

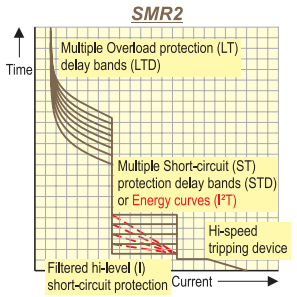

A trip unit designed to offer a overload (LT) and short-circuit protection (ST). The overload protection is adjustable from 0.4 to 1 x the chosen rating and has multiple protection bands (LTD). The short-circuit protection (ST) is adjustable from 2 to 13 x the set LT value and has multiple protection bands (STD). The short-circuit protection can also be set to an energy mode. The unit is designed to protect all circuit types and to offer a high level of discrimination with downstream devices. Different modules allow the user to expand the device including groundfault, load shedding and communications etc.

(1) Not available on FK frame execution.
(2) Text applicable for SMR1/2. For SMR1e, SMR1s and g see relevant section.

Just rel

Internal Accessories

C.2 Auxiliary contacts

C.4 Releases

External Accessories

C.6 Residual current devices RCD's

C.8 Rotary handles

C.12 Electrical operators

C.16 Connectivity, 60 mm system

C.18 Changeover / Power transfer systems

Versions

C.21 Plug-in devices

C.23 Draw-out devices, FE & FG frame

C.25 Draw-out, FK frame

Installation

C.26 Padlocks, keylocks

C.27 Door flanges

C.28 Terminal shields

C.29 FD frame adaptors and other accessories

Mounting positions

C.31 Allowed mounting position per frame size

C.31 Breaker supply

Connections

C.32 Standard connection terminals

C.34 Rear connections facilities

C.36 Optional connection terminals

C.38 Optional connection - box clamps

C.40 Optional connection terminals - extenders variants

C.41 Phase separators & Back plates

Internal accessories

Auxiliary contacts

FD, FE & FG frame

Auxiliary contact blocks are coveniently fitted into an auxiliary-device compartment, accessible by removing the breaker cover. This fully insulated compartment has several pouches, a number of which are reserved for contact blocks. To allow for a logical and traceable schematics each contact block has a pre-defined position within the auxiliary device compartment indicated by a symbol printed both on the breaker case and on the auxiliary device itself.
External wiring can be brought into the accessory compartment through - specifically designed and positioned - break-out openings in the breaker lid or can go through channels in the breaker rear. Once this is done the wiring can be stripped and easily connected to the box terminals on the internal accessories. These terminals are designed to connect wiring up to 2.5 mm^2.
To identify the correct mounting position within the accessory compartment symbols are moulded into the breaker and contact housing.
For Auxiliary switches suited for mounting on the right ↱ and on the left ↰.
For Bell Alarm switches; Mechanism operated types Ⓜ
Trip unit operated types 🔔.

Numerous types are available all meeting the requirement of the EN 60 947-5 and UL standards.
Each breaker type allows the use of three basic types indicating the breaker contact position, fault indication and trip position indication. For the FE & FG frame draw-out execution a fourth type is available that indicates the plugged in, test or withdrawn position of the breaker in the draw-out chassis (carrage indication contacts).
Please take into account that when the contacts are not linked or mounted in the breaker, their function is reversed. *i,e. NO becomes NC and NC becomes NO.*

The contact numbering of each device is indicated in the shematics next to each photo. **eg. 5 or 6**
The intermediate cover of the breaker has a separate set of codes that indicate the number of the device when it is mounted in the breaker. **eg. 1 or 2**
The combination of these two codes provides a standardized coding system of each connection point(1). **eg. 15 or 26**

FAS/CA (open - closed indication)
They indicate the breaker contact status (open/closed).
The contact is mounted in a simple click-in block and is available in 4 different versions:
- **FAS10L** auxiliary contact left mounted NO
- **FAS01R** auxiliary contact right mounted NC
- **FAS10L** auxiliary contact left mounted NO
- **FAS01R** auxiliary contact right mounted NC

The FAS10 & FAS01 contacts blocks are also used in kits as carriage indication contacts for the draw-out versions of the FE & FG frame. Premounted sets, one with 1 NO indication contact per position (total 3 NO contacts) and a second with 1 NO and 1 NC contact per position (total 3 NO + 3 NC contacts) are available. These sets come as easy to fit and connect field mountable kits.

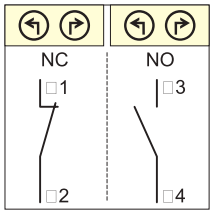

BAM/CDM (Bell alarm mechanism)
Indicates that the breaker has moved to it's "Tripped" position.
This can be caused by a fault (see BAT/CD contact), the operation of the push to trip button on the breaker front or a shunt or undervoltage release operation.

The contact is a simple click-in block and can only be placed in the BAM position inside the accessory compartment indicated by the symbol Ⓜ. By using a combination of the BAM and BA contacts it is possible to discriminate between the kind of fault the breaker has reacted to.

3 versions of bell alarm mechanisms are available:
- **FABAM10** bell alarm mechanism NO for FE and FG frame
- **FABAM01** bell alarm mechanism NC for FE and FG frame
- **FABAM11** bell alarm mechanism (change over) only for FD frame
  (Is delivered with 0.75 mm^2 cables of 60 cm length).

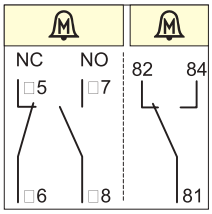

(1) See wiring diagram section for complete overview.

BAT/CD (Bell alarm trip unit)
Indicates that the breaker has detected a fault condition resulting in it moving to it's "Tripped" position. A Record Plus breaker trips on a fault condition due to a Trip Unit protection device or RCD operation. The operation of this device can be verified mechnically by depressing the RCD operation interface lever located below the Trip Unit.
The contact is a simple click-in block and can only be placed in the BAT position inside the accessory compartment (indicated by the symbol 🔔). By using a combination of the BAM and BAT contacts it is possible to discriminate between the kind of fault the breaker has reacted to.
4 versions are available:
for general use:
- **FABAT10** bell alarm trip NO
- **FABAT01** bell alarm trip NC

for use in FE frame thermal magnetic and magnetic only types:
- **FEBAT10** bell alarm trip NO
- **FEBAT01** bell alarm trip NC

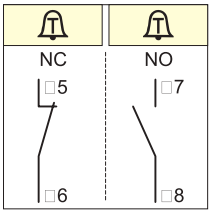

Performance

The contacts offer a combination of a high thermal current rating and can be used down to typical PLC operating levels of 12V 5 mA, AC/DC. The contacts are self-reansing and offer a life span equivalent to or exceeding that of the breakers. The values mentioned here have been determined in accordance with the EN 60947-5-1 standard.

	AC (A)				DC (A)			
	FAS (no/nc)	BAT (no/nc)	BAM (co)	BAM (no/nc)	FAS (no/co)	BAT (no/nc)	BAM (co)	BAM (no/nc)
≤ 24V	10	10	10	10	2.5	2.5	4	2.5
48V	10	10	10	10	1.4	1.4	0.5	1.4
60V	10	10	10	10	1	1	0.3	1
110V	6	6	6	6	0.55	0.55	0.2	0.55
220V	3	3	3	3	0.27	0.27	0.1	0.27
380V	2	2	2	2	0.2	0.2	-	0.2
500V	1.5	1.5	-	1.5	-	-	-	-
600V	1.2	1.2	-	1.2	-	-	-	-

FK frame

Optimized for use in the larger FK frame size mounting and connecting takes place in the same manner as in the FD, FE and FG frame sizes. The contact blocks are of the changeover type (form C) and are available in easy to mount click in devices with a bell alarm contact or auxiliary switch. A maximum of three auxiliary switches and one bell alarm contact can be mounted. To indicate the breaker position in the draw-out chassis (see page C.23 and C.24) a similar contact block is used.)

The contact numbering of each device is indicated in the shematics next to each photo. **eg. 5 or 6**

The intermediate cover of the breaker has a separate set of codes that indicate the number of the device when it is mounted in the breaker. **eg. 1 or 2** +

The combination of these two codes provides a standardized coding system of each connection point. **eg. 15 or 26**

FAS/CA (open - closed)
They indicate the breaker contact status (open/closed). The contacts are mounted in a simple click-in block, of which a maximum of three fit into the auxiliary device compartment (right side).

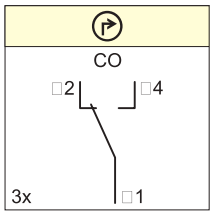

FNS11R Auxiliary contact right mounted CO **BA/CD (Bell alarm)**
A contact that indicates that the breaker has tripped. The contact is mounted in a simple click-in block and fits into the auxiliary device compartment (right side).

FNBA11R Bell Alarm contact right mounted CO

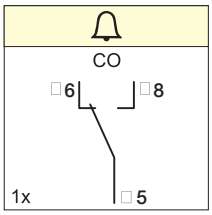

Performance

The values mentioned here have been determined in accordance with the EN 60947-5-1 standard and apply for inductive loads.

	AC (A)		DC (A)	
	FAS (co)	BA (co)	FAS (co)	BA (co)
≤ 24V	10	10	2	2
48V	6	6	1.5	1.5
60V	6	6	1	1
110V	4	4	0.5	0.5
220V	3	3	0.25	0.25
400V	1.5	1.5	-	-

Internal Accessories

Releases

Shunt and undervoltage releases can be fitted easily and quickly in a specifically designed accessory compartment which is accessible by removing the breaker lid. This fully insulated compartment has several pouches one of which is reserved for a shunt or undervoltage release indicated by a symbol printed in the breaker case and on the auxiliary device itself. External wiring can be brought into the accessory compartment through - specifically designed and positioned - break out openings in the breaker lid, or can go through channels in the breaker rear.
Once this is done the wiring can be stripped and easily connected to the box terminals on the internal accessories. These terminals are designed to connect wiring up to 2.5 mm^2.
The devices are designed to trip the breaker when its contacts are closed and the handle indicates the "On" position. When the breaker contacts are open and the breaker handle indicates "Off" or "Trip" activating the releases will have no effect.(1)

FD, FE & FG frame

Shunt release (SHT/EA)

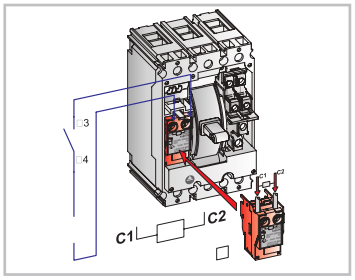

The ***Record Plus™*** shunt and undervoltage releases are common for all frame sizes up to 630A and all offer a unique combination of low power consumption and a kiss-free, lock out operation. Most types are common for equivalent AC and DC ratings and all are available in a wide range of voltages. When the breaker is in the "ON" position and the shunt trip is activated the breaker will trip and its contacts will open. The device can be constantly activated at its nominal voltage allowing it to be used as a lock out coil. The connection clamps are marked C1 and C2. Switches, relay contacts and push buttons can be used to operate the shunt release. The use of illuminated push buttons is limited by the power that these lamps require to operate and the value that the shunt release requires to trip. Here the maximum total consumption of the lamps may not exceed 2mA.

Voltage operational band	0.7 - 1.1 Un
Minimum pulse duration	10 msec
Total intervention time	≤ 50 msec

Undervoltage releases (UVR/MV)

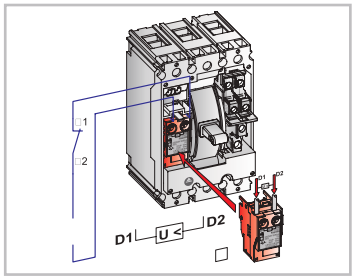

When the breaker is in the "ON" position and the undervoltage release is deactivated the breaker will trip and its contacts will open. In de-energized status the device prevents the breaker contacts from moving and is suitable for use as a lock-out coil. The connection clamps are marked D1 and D2. De-energization of the device or a drop in its supply voltage to a value below the mentioned lower voltage limit will activate the device. To prevent voltage-dip-driven nuisance tripping an undervoltage release with time delay is available. An external DIN-rail mountable box contains a time delay unit with settable timings and is linked up with a DC UV undervoltage release. This version is only available for an AC voltage of 230/240V.

Voltage operation band (all types)	
deactivates between	0.35 - 0.7 Un
activates between	0.85 - 1.1 Un
minimum reaction time	10 msec
total intervention time (undelayed type)	≤ 50 msec
delayed version (extra delay)	settable 100 to 250 msec

Shunt release - Performance

Voltage rating	Current consumption mA		Power consumption mW/mVA	
	inrush	hold	inrush	hold
12V DC	200	200	2.4	2.4
24V AC/DC	150	150	3.6	3.6
48V AC/DC	60	60	2.88	2.88
110/130V AC/DC	40	40	4.8	4.8
220/240V AC 250V DC	20	20	4.6	4.6
440/440V AC	15	15	6.6	6.6
480V AC	15	15	7.2	7.2

Undervoltage releases - Performance

Voltage rating	Current consumption mA		Power consumption mW/mVA	
	inrush	hold	inrush	hold
24V AC/DC	50	50	1.2	1.2
48V AC/DC	20	20	0.96	0.96
110/130V AC/DC	15	15	1.8	1.8
220/240V AC 250V DC	15	15	3.45	3.45
440/440V AC	15	15	6.6	6.6
480V AC	15	15	7.2	7.2

(1) Not applicable for FK Frame undervoltage release.

FK frame

Shunt release (SHT/EA)

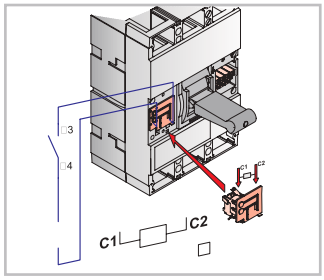

When the breaker is in the "ON" postion and the shunt trip is activated the breaker will trip and its contacts will open. The device can be constantly activated at its nominal voltage allowing it to be used as a lock out coil.
The connection clamps are marked C1 and C2.
Switches, relay contacts and push buttons are used to operate the shunt release.

Voltage operational band	0.7 - 1.1 Un
Minimum pulse duration	10 msec
Total intervention time	≤ 50 msec

Undervoltage releases (UVR/MV)

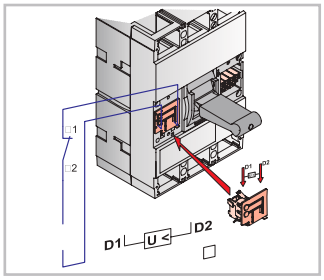

When the breaker is in the "ON" position and the undervoltage release is deactivated the breaker will trip and its contacts will open. In de-energized status the device prevents the breaker contacts from moving and is suitable for use as a lock-out coil. The connection clamps are marked D1 and D2. De-energization of the device or a drop in its supply voltage to a value below the mentioned lower voltage limit will activate the device. To prevent voltage-dip-driven nuisance tripping an undervoltage release with time delay is available. An external DIN-rail mountable box contains a time delay unit with settable timings and is linked up with a DC UV undervoltage release. This version is only available for an AC voltage of 230/240V.

voltage operation band (all types)	
deactivates between	0.35 - 0.7 Un
activates between	0.85 - 1.1 Un
minimum reaction time	10 msec
total intervention time (undelayed type)	≤ 50 msec
delayed version (extra delay)	settable 100 to 250 msec

Shunt release - Performance

Voltage rating	Current consumption mA		Power consumption mW/mVA	
	inrush	hold	inrush	hold
24V AC/DC	12.5	1.3	300	30
48V AC/DC	6.3	0.6	300	30
110/130V AC/DC	2.3	0.2	300	30
220/240V AC 250V DC	1.2	0.1	300	30
380-400V AC	0.8	0.1	300	30

Undervoltage releases - Performance

Voltage rating	Current consumption mA		Power consumption mW/mVA	
	inrush	hold	inrush	hold
24V DC	1.3	0.13	30	3
24V AC	1.3	0.13	30	3
48V DC	0.6	0.06	30	3
110-127V AC	0.2	0.02	30	3
230V AC	0.1	0.01	30	3
400-415V AC	0.1	0.01	30	3

External accessories

Residual current devices

A ***Record Plus™*** circuit breaker can offer protection against earth leakage currents by using an add-on residual current device (RCD). A line of three and four pole completely integrated add-on devices are available as side mounted models (FD frame size) or as units that are fitted below the trip unit of the breaker (FD, FE and FG frame sizes). In all cases the RCD unit interfaces directly with the circuit breaker without the use of any secondary wiring or connections.
Each RCD has a sensor placed around the phase and neutral current paths that detects the vectorial sum of the phase and neutral currents. When this sum is no longer zero it is assumed that current is flowing to earth (residual current). If this value exceeds the threshold set on the RCD the breaker connected to the device is tripped.
The RCD unit´s electrical power is supplied by the line voltage of the breaker it is linked to. By use of a multi-phase bridge the design still works when one phase and the neutral is present. A pouch on the RCD allows one to place one BAT contact NO or NC which allows a remote signal on earth faults.
A ***Record Plus™*** breaker and an RCD combination can be connected like any stand-alone breaker and are available as fixed or plug-in devices. The mains connection interface of the RCD is an exact replica of the breaker connection area, thus allowing the use of all standard breaker terminals.

Designed to meet the latest IEC 947 (industrial), IEC 1009 (residential) and the IEC 755 standards, ***Record Plus™*** RCDs are available in a version suited for side or bottom mounting as three and four pole units. The tamper free setting area illustrated below is common for the whole line and includes a mechanical and an electrical test option.

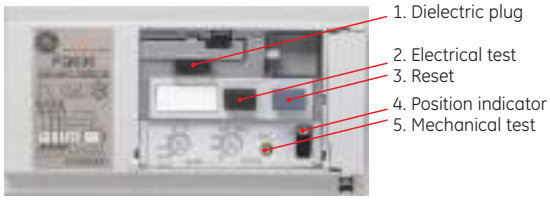

The mechanical test button tests the mechanical operation of the breaker and RCD unit without power, whereas the electrical option tests both the electrical and mechanical operation of the device. In order to allow for a dielectric test of the breaker and RCD combination without damaging the electronics, a so called "dielectric disconnect plug unit" is placed within the setting area. All devices have a setting area with a standard front cut-out of 45 mm. The device has numerous current and time settings and an override blocking the time settings when set to 30mA. The devices are class A, surge resistant (500A 8/20 mircoseconds) and are finished with a transparent, tamper-free cover.

The FD-frame RCD is available in two versions: for mounting on the right hand side of the breaker or for mounting below the trip unit of the breaker. The side mounted type is available in two versions. The first one comes with a multifunctional DIN-rail mounting kit including a connection kit to link up the breaker and the RCD. The connection kit allows the user to feed the breaker and RCD assembly from a multitude of directions while placing the RCD up- or downstream. The second version of the side-mounted RCD is designed for screw mounting and comes with a simplified connection set (see sketch). Both side mounted devices are designed to accommodate a 45 or 64 mm cover plate cut-out. This allows usage in an environment with other DIN-modular devices or with other breakers.

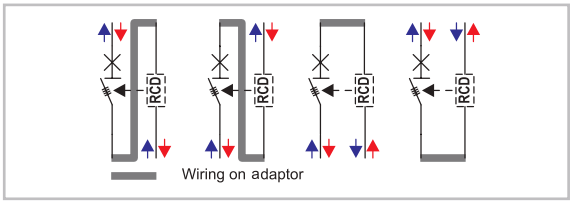

The screw mounted type that only allows for two connection options is depicted on the right.

The FE- and FG-frame RCD units are designed to be mounted directly below the breaker trip unit area, thus forming an integrated circuit breaker plus RCD device. All 'bottom' mounted devices are available as three and four pole units and have a setting area that is common for the whole line.

Programme overview

	FDQI or S	FDQ(1)	FEQ(1)	FEQ(1)	FGQ(1)
	FD frame side mounted	FD frame mounted below breaker(1)	FE frame mounted below breaker(1)	FE frame mounted below breaker(1)	FG frame mounted below breaker(1)
In (A)	160	160	160	250	400/630
Number of poles	3-4	3-4	3-4	3-4	3-4
Delay at 2 Idn (msec)	Inst-60-150-300-600	Inst-60-150-300-600	Inst-60-150-300-600	Inst-60-150-300-600	Inst-60-150-300-600
Total tripping time at 2 x Idn (msec)	40-100-190-340-640	40-100-190-340-640	40-100-190-340-640	40-100-190-340-640	40-100-190-340-640
Available voltages (AC..50/60Hz)	220-440V / 440-690V	220-440V / 440-690V	220-440V / 440-690V	220-440V / 440-690V	220-440V / 440-690V
Idn setting (A)	0.03 - 0.3 - 1 - 3 - 10	0.03 - 0.3 - 1 - 3 - 10	0.03 - 0.3 - 1 - 3 - 10	0.03 - 0.3 - 1 - 3 - 10	0.03 - 0.3 - 1 - 3 - 10

(1) Must be linked to the trip unit side of the breaker

Selectivity

To assure selectivity/discrimination between two residual current devices the following rules are applicable.

$Id_U > 2 \times Id_D$
Where Id_U is the threshold of the upstream device and Id_D that of the downstream one.

$Tr_U > To_D$
Where Tr_U is the reaction time of the upstream device and To_D is the total opening time of the downstream device.
The table included here indicates where selectivity/discrimination can be achieved and takes into account the threshold and time settings of the devices.

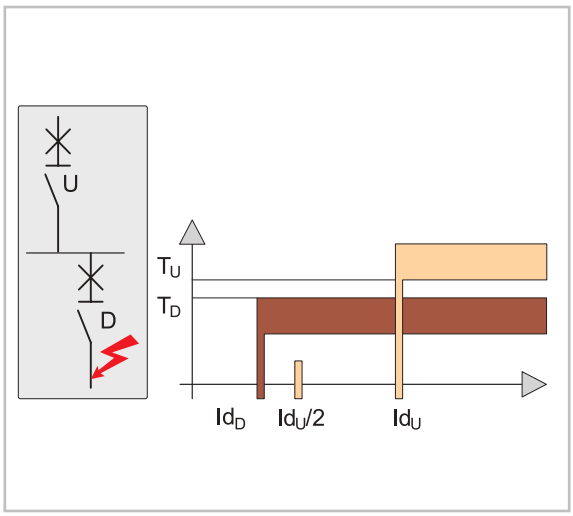

Selectivity overview

outgoing / incoming	Idn (mA)	Elfa Plus"S"		F-Q RCD 60 ms			F-Q RCD 150 ms			F-Q RCD 300 ms			F-Q RCD 600 ms		
		300	1000	300	1000	3000	300	1000	3000	300	1000	3000	300	1000	3000
ElfaPlus	30	T	T	T	T	T	T	T	T	T	T	T	T	T	T
Inst. Type	300		T		T	T	T	T	T		T	T		T	T
	1000					T			T			T			T
ElfaPlus	30						T	T	T	T	T	T	T	T	T
"S" type	300							T	T		T	T		T	T
	1000								T			T			T
FD-Q RCD	30		T		T	T	T	T	T	T	T	T	T	T	T
set at inst.	300					T		T	T		T	T		T	T
	1000								T			T			T
FD-Q RCD	30						T	T	T	T	T	T	T	T	T
set at:	300							T	T		T	T		T	T
60 msec.	1000								T			T			T
	3000														
FD-Q RCD	30									T	T	T	T	T	T
set at:	300										T	T		T	T
150 msec.	1000											T			T
	3000														
FD-Q RCD	30												T	T	T
set at:	300													T	T
300 msec.	1000														T
	3000														

T = Total (or Full) selectivity

External accessories

Rotary handles

The ***Record Plus™*** rotary handle is specifically designed to allow the user to change the linear motion of the breaker to a rotation over a 90 degree angle. This can be accomplished by simply adding an adaption box to the breaker front.
The design is universal for the whole breaker line and has the OFF position placed at 3 o'clock and the ON position at 6 o'clock. The third breaker position "TRIP" is located between the ON and the OFF position.
The design has room for two early closing and late opening contact blocks that, in order to save installation time, are delivered pre-mounted and pre-wired with a specific rotary-handle device.
Each ***Record Plus™*** rotary handle is designed to allow the user to place one to three 5 to 8 mm padlocks or one keylock that can lock the breaker in OFF position.

Record Plus™ Rotary handles
Three operators types are available, one for direct breaker mounting, a device for through door or panel mounting and a third type where the operator is mounted on the door front.

All operators have a common operation moded and a clear position indication:

Breaker OFF - handle horizontal
Breaker ON - handle Vertical

The standard padlocking and keylocking mechanism can be bypassed to allow the breaker to be locked in other positions than OFF.

A special version is available with two normally open auxiliary contacts (FABAM10) that are pre-mounted and pre-wired with leads of 0.75 mm^2 and a length of 60 cm. The use of a through door rotary handle door flange is recommended.

An extra Ronis or Profalux key lock can be clicked into the handle front, thus allowing one to lock the breaker in the same manner as the padlocking device.
The Ronis key locks are available in a number of versions:
- A version where each lock has a different key number
- A version where the user can choose one of six keys for several locks

Record Plus™ rotary handle mounted directly on the breaker front

A specifically designed adaptor box with a handle is directly installed onto the breaker front. It is available in grey for normal applications and in a yellow/red execution for machine tool applications.

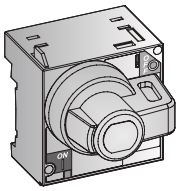

FD 63/160

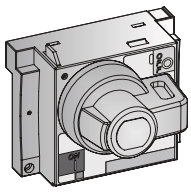

FE 160/250

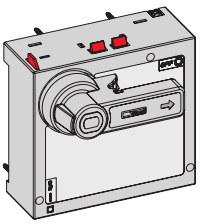

FG 400/630

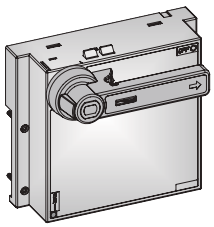

FK 800-1600

Rotary handle for use through door or cover plate

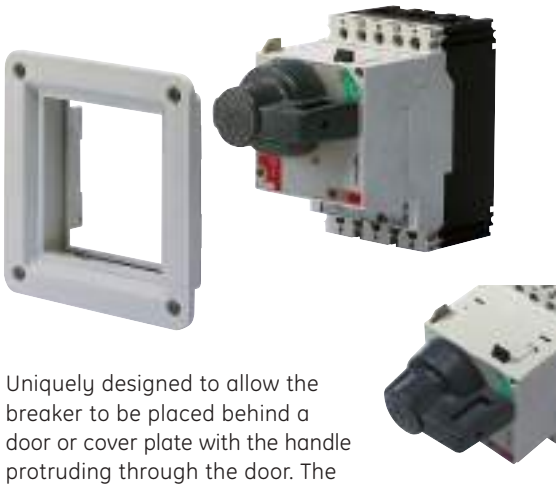

Uniquely designed to allow the breaker to be placed behind a door or cover plate with the handle protruding through the door. The rotary handle features a door-opening or cover-plate-removal prevention, interlock in the ON position and a mechanism that automatically trips the breaker if the door or cover plate is not present (a bypass is available). The rotary handle is available in grey for normal applications and in a yellow/red execution for machine-tool applications.

Rotary handle for panel or hinged door mounting

A handle and escutcheon is mounted on the door or panel front and connected to the breaker by an elongation shaft that goes into an adaptor box directly installed onto the breaker front. The design allows for a total depth of up to 350 mm (from the back of the breaker mounted behind the door or panel and the door front).
The handle is available in grey for normal applications and in a yellow/red execution for machine-tool applications. Interlocks that prevent the opening of the door while the breaker is "ON" (are standard). For override operation see red indicators on euchenon front.

All ***Record Plus***™ rotary handles have the same standard "single hole" front door drilling and are specifically designed to tackle mounting issues as "shaft droop" and tolerance in user drillings.

Available in grey or in yellow/red the device is supplied with an adaptor box for installation on the breaker front, a mounting position definer, a shaft, a handle with escutcheon for door or panel mounting and all necessary fixation hardware.
The door or panel mounted operating handle has a protection degree of IP54.

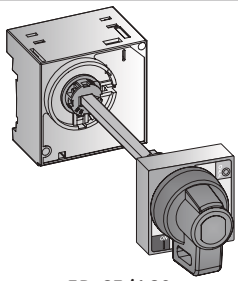

FD 63/160

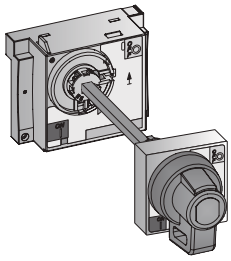

FE 160/250

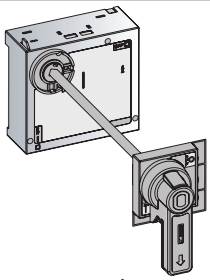

FG 400/630

FK 800-1600

External accessories

Rotary handles - accessories

Extension shaft set

- The "long shaft set" allows the user to install a breaker with a door or panel mounted rotary handle up to a depth of 600 mm, measured from the back of the breaker to the front of the door
- The set includes a shaft and a shaft droop prevention adapter
- Available for all frames

Flex operator push to trip (Bowden cable)

- For the door/panel-mounted rotary handle accessory
- Allows the operation of the push-to-trip button from the door front by use of a bowden cable (cable NOT supplied).
- Available for FE & FG Frame sizes

Keylock

An extra Ronis or Profalux key lock can be clicked into the handle front, thus allowing one to lock the breaker in the same manner as the padlocking device.
The Ronis key locks are available in a number of versions:

- A version where each lock has a different key number
- A version where the user can choose one of six keys for several locks

Draw-out adaptor

- For use with the door/panel mounted rotary handle with the standard or long shaft
- The device allows for the difference in breaker position in the draw-out device (depth difference, withdrawn and plugged in)
- The telescopic construction allows one to close the door or panel with the breaker in the withdrawn position
- Available for FE, FG and FK frame sizes

Side-by-side installation adapter boxes

- A set of covers that bridge the gap between breakers with rotary handles on use through cover plate
- Provides an aesthetically pleasing finish to the breaker fronts
- Available for FD and FE frame sizes

Auxiliary contacts

- Special rotary handle versions can be provided with two FABAM NO contacts. These close before the main contacts close and open after the main contacts open
- The contacts come pre-installed in the rotary handle and have 2 cables 0.75 mm^2, 60 cm long
- Available for FD, FE, FG and FK frame sizes

External accessories

Electrical operators

In order to allow a ***Record Plus™*** circuit breaker to be operated electrically, front mounted electrical drives are available. These drives are designed for easy mounting onto the breaker front have have three clearley indicated positions "OFF", "ON" and "TRIPPED".
The Record Plus standard Electrical Operator offering covers a total of five different devices. For each frame size a field mountable execution is availabe, one for the FD frame (3-160A), one for the FE frame (3-250A), one for the FG frame (250-630A) and one for the FK frame (630-1600A).

For Hi end applications the Fk frame can be equipped with a factory mounted electrical operator with an enhanced performane. Each device is easy to mount and connect whilst the connection diagrams allow a simple yet flexible application of the device.
The devices are connected by means of IPXXB box terminals accessible from the breaker front and located in the immediate vicinity of the terminals of the internal accessories. The box terminals allow for wiring with a cross section of 0.5 to 2.5 mm^2.

Operation

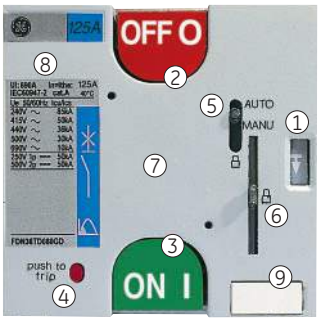

① Breaker Position Indicator - OFF- ON-Tripped-
② Breaker "ON" push-button
③ Breaker "OFF" push-button
④ Breaker "quick" Trip/OFF push-button
⑤ Manual-Automatic switch
⑥ Padlocking device (-O- Off only)
⑦ Area reserved for Optional field mountable KeyLock
⑧ Breaker data labels
⑨ Circuit indication label

FD frame operator
Designed to be used in a side by side configuration with the FE frame operators the breaker & drive combination have the same depth whilst the cut-outs are of the same size.
Each Record Plus FD breaker is supplied with two extra data labels. This to indicate the breaker data on the operator front (standard labels are hidden once the device is mounted).

FD operators have two coils one to close the Record Plus device and a second to open. The operating panel has a Auto & Manual position that will only allow local OFF & ON operations when the switch is set to Manual.
In all conditions a recessed push to trip knob is available to allow for emergency disconnection of the device.

Padlocking or keylocking is possible in OFF position whilst each operator is supplied with a clear "ON", "OFF" and "TRIPPED" position indicator and a space for a optional circuit indicator label.

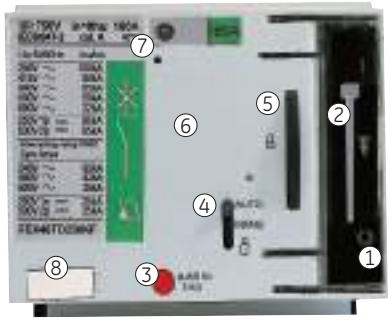

① Breaker Position Indicator - OFF- ON-Tripped-
② Breaker operating handle behind transparent door
③ Breaker "quick" Trip/OFF push-button
④ Manual-Automatic switch
⑤ Padlocking device (-O- Off only)
⑥ Area reserved for Optional field mountable KeyLock
⑦ Breaker data labels
⑧ Circuit indication label

FE frame operator
Designed to be used in a side by side configuration with the FD frame operators the breaker & drive combination have the same depth whilst the cut outs are of the same size.
Each Record Plus FE breaker is supplied with two extra data labels. This to indicate the breaker data on the operator front (standard labels are hidden once the device is mounted).
FE operators are equipped with a motor that changes direction to close or open the Record Plus devices. The operating panel has a Auto & Manual position that only will allow acces to the manual operating handle when the switch is set to Manual (transparent cover can be opened).
In all conditions a recessed push to trip knob is available to allow for emergency disconnection of the device.
Padlocking or keylocking is possible in OFF position whilst each operator is supplied with a clear "ON", "OFF" and "TRIPPED" position indicator and a space for a optional circuit indicator label.

Electrical operators

Operation

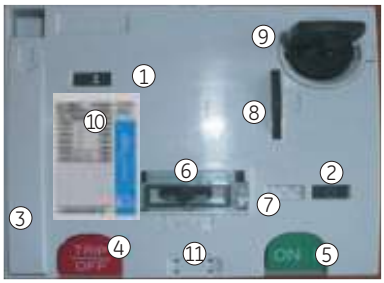

① Breaker Position Indicator -Tripped- -Non Tripped -
② Breaker Position Indicator -O- -I - (OFF or ON)
③ Breaker Manual -O- OFF handle (Pump mechanism)
④ Breaker "quick" Tripped/OFF push-button
⑤ Breaker -I- ON push-button
⑥ Sealable Manual-Automatic switch
⑦ Spring Charge Indicator
⑧ Padlocking device (-O- Off only)
⑨ Optional field mountable KeyLock
⑩ Breaker data labels
⑪ Circuit Indication label

FG frame Operator
A new Device, simple and easy to mount to all FG frame breakers in all situations. Each operator has a easy to use mounting interface allowing the device to be mounted in the field whilst allowing wiring access to all internal accessories. This mounting interface is linked to the electrical operator via a simple and easy to use hinging mechanism. After mounting and wiring simply close the hinging mechanism and the electrical operator is sturdily linked to the breaker. Suitable for all FG frame breakers each device is equipped with a upgraded and comprehensive user interface.

FG operators have a motor to open the device and a closing coil. The operating panel has a Auto & Manual position that only will allow use of the manual operating handle when the switch is set to Manual. In all conditions a recessed push to trip knob is available to allow for emergency disconnection of the device.
Padlocking or keylocking is possible in OFF position whilst each operator is supplied with a clear "ON", "OFF" indicator, a separate "TRIPPED" position indicator and a space for a optional circuit indicator label.

① Breaker Position Indicator -O- -I - (OFF, ON or Tripped)
② Operator Position Indicator Ready to Close/Open
③ Breaker Manual -O- OFF handle (Pump mechanism)
④ Breaker "quick" Tripped/OFF push-button
⑤ Standard version. Selector switch
(Manual only - Handle pump -OFF- or -ON-)
⑤ Enhanced version (depicted) "ON" coil actuator knob
⑥ Manual-Automatic-Lock switch
⑦ Padlocking device (-O- Off only)
⑧ Optional field mountable KeyLock
⑨ Breaker data labels

FK frame Operator
A new Device, simple and easy to mount to all FK frame breakers in all situations. Each operator has a easy to use mounting interface that replaces the original breaker cover and allows the Electrical Operator to be mounted in the field. The Electrical Operator is then simply screwed on to mounting interface linking it to the breaker mechanism. Suitable for 3 or 4 pole FK frame breakers with ratings of 630, 800. 1000, 1250 & 1600Amps each device is equipped with a upgraded and comprehensive user interface.

Standard FK operators are equipped with a motor that changes direction to close or open the Record Plus devices. The operating panel has a Auto & Manual position that only will allow use of the manual operating handle when the switch is set to Manual.
A selector switch allows the user to switch between the use of the operating handle to switch OFF or ON. In all conditions a recessed push to trip knob is available to allow for emergency disconnection of the device.

Enhanced FK operators have a motor to open the device and a closing coil. The operating panel has a Auto & Manual position that only will allow use of the manual operating handle when the switch is set to Manual. In all conditions a recessed push to trip knob is available to allow for emergency disconnection of the device.

All devices can be padlocked or keylocked in their OFF position whilst each operator is supplied with a clear "ON", "OFF" and "Tripped" indicator.

Specifications

Record Plus Types	FD frame 3 or 4 pole	FE frame 3 or 4 pole	FG frame 3 or 4 pole	FK frame 3 or 4 pole	FK frame 3 or 4 pole
Electrical operator types	**FDEMF**	**FEEMF**	**FGEMF**	**FKEMF**	**FNEMF**
Mounting	Field	Field	Field	Field	Factory only
Rated voltages					
24V AC/DC	•	•	•	-	•
48V AC/DC	•	•	•	-	•
60V AC/DC	•	•	•	-	-
210-130V AC/DC	•	•	•	-	-
200-250V AC/DC	•	•	•	-	-
400-440V AC/DC	•	•	•	-	-
24V AC	-	-	-	•	-
48V AC	-	-	-	•	-
110V AC	-	-	-	•	•
110V DC	-	-	-	-	•
220V AC	-	-	-	•	•
220V DC	-	-	-	-	•
Power consumption					
During ON cycle	700VA/W	700VA/W	500VA/W	460VA..110VA	500VA/W
During OFF cycle by operator	700VA/W	700VA/W	500VA/W	460VA..110VA	500VA/W
During OFF tripped cycle by shunt release	max 7.5 mVA/mW	max 7.5 mVA/mW	max 7.5 mVA/mW	max 300 mVA/mW	max 300 mVA/mW
Power consumption					
AC15 24V	4A	4A	4A	4A	4A
AC15 230V	1A	1A	1A	1A	1A
Operating times					
"ON" via electrical operator	50 milliseconds	100 milliseconds	50 milliseconds	≤ 1.5 seconds	50 milliseconds
"OFF" via electrical operator	50 milliseconds	100 milliseconds	8 seconds	3 seconds	8 seconds
"OFF" via shunt release	50 milliseconds	50 milliseconds	50 milliseconds	50 milliseconds	50 milliseconds
"Reset" time between an "OFF" and "ON" pulse	80 milliseconds	100 milliseconds	8 seconds	≤ 1.5 seconds	8 seconds
Life span					
Mechanical endurance	100000	10000	5000	5000	5000
Operating frequency (per hr.)	120	120	60	30	30

Electrical operators

Field mountable models schematics

FD frame standard scheme
For use with NON Automatic breakers or in cases where no RESET functionality is required.

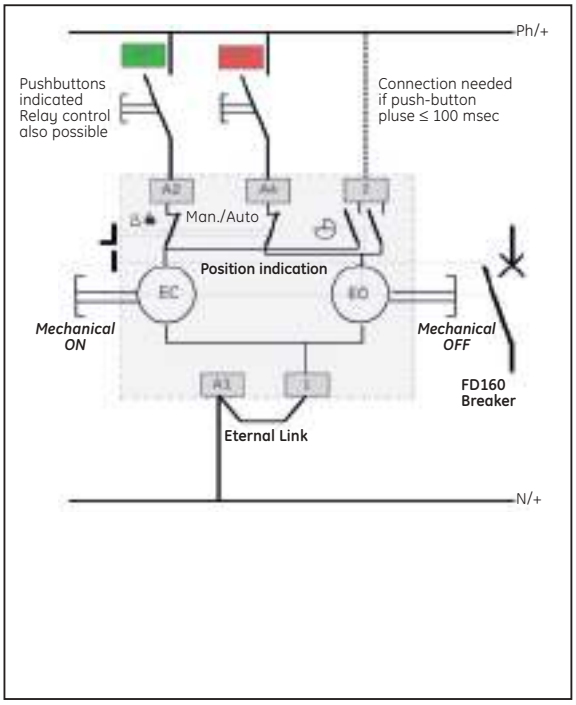

FE frame standard scheme
For use with NON Automatic breakers or in cases where no RESET functionality is required.

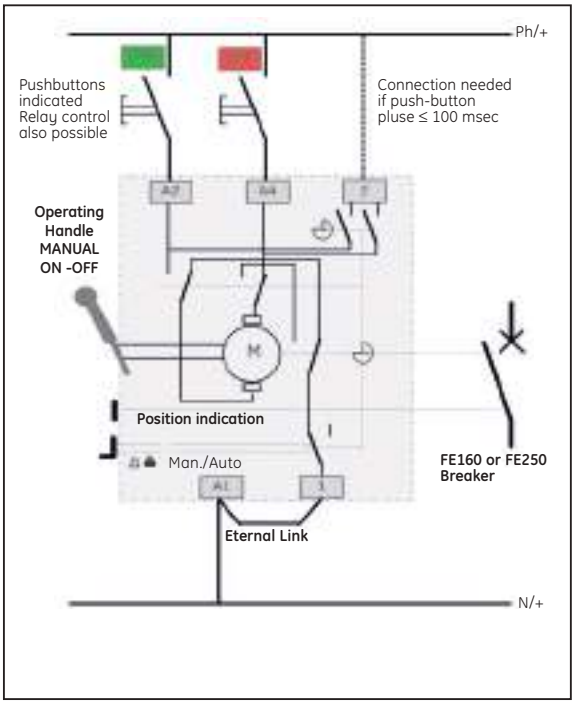

FD frame alternate options
One or both of the options (depicted in blue and green) can be added to create the indicated functionality.

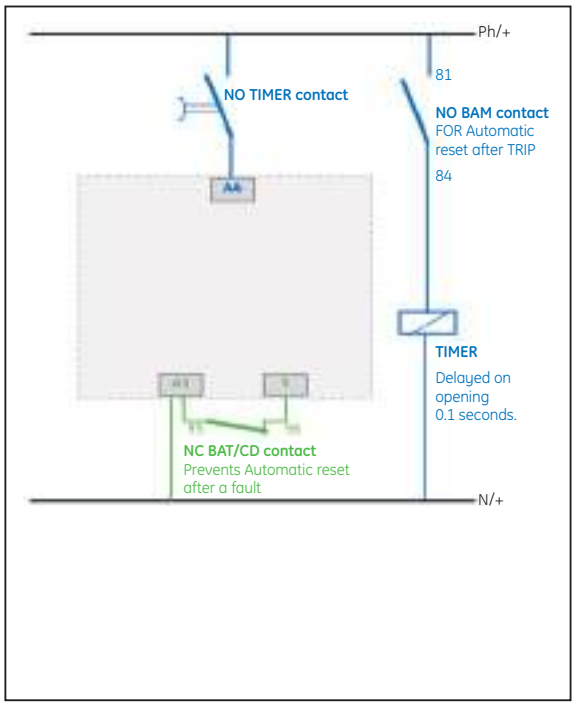

FE frame alternate options
One or both of the options (depicted in blue and green) can be added to create the indicated functionality.

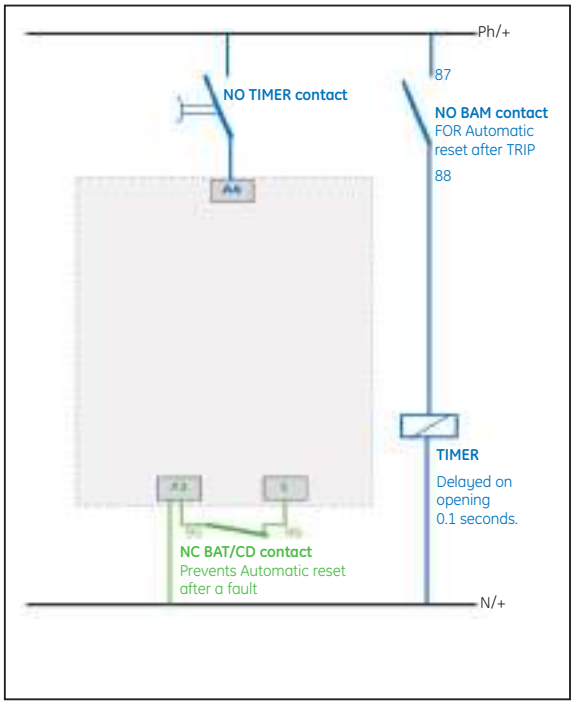

Electrical operators

Field mountable models schematics

FG frame standard scheme
For use with NON Automatic breakers or in cases where no RESET functionality is required.

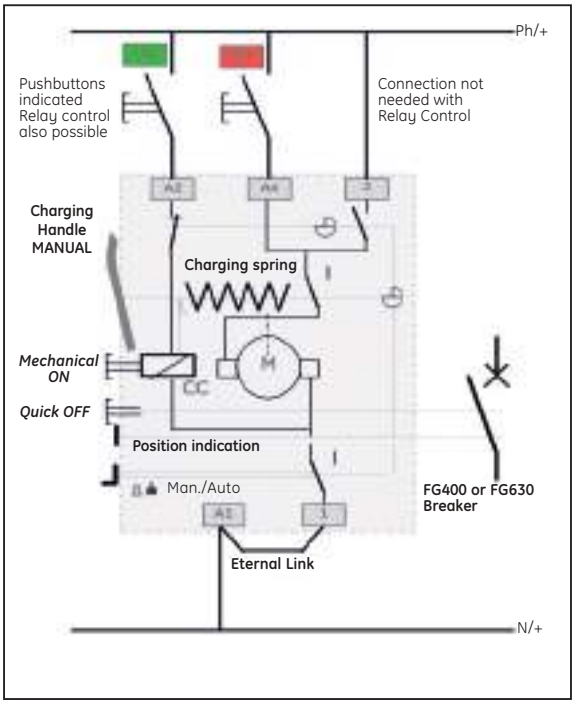

FK frame standard scheme for relay control
For use with NON Automatic breakers or in cases where no RESET functionality is required. Use alternate marked in green to black reset after a fault.

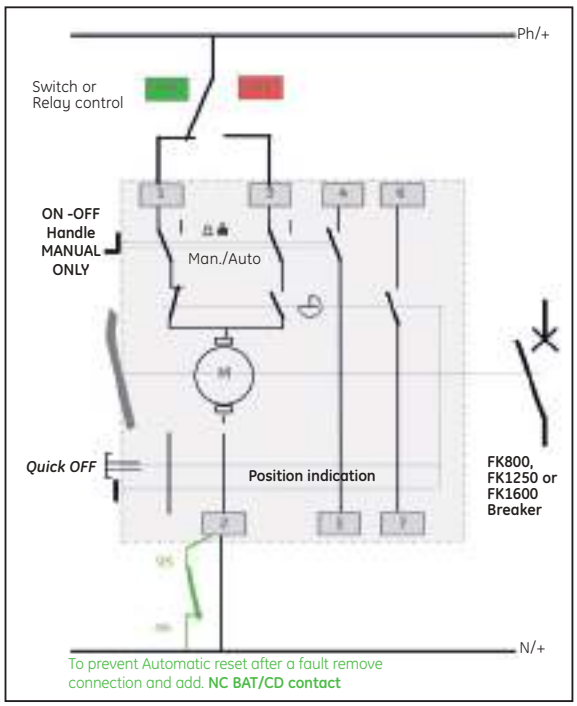

FG frame alternate options
One or both of the options (depicted in blue and green) can be added to create the indicated functionality.

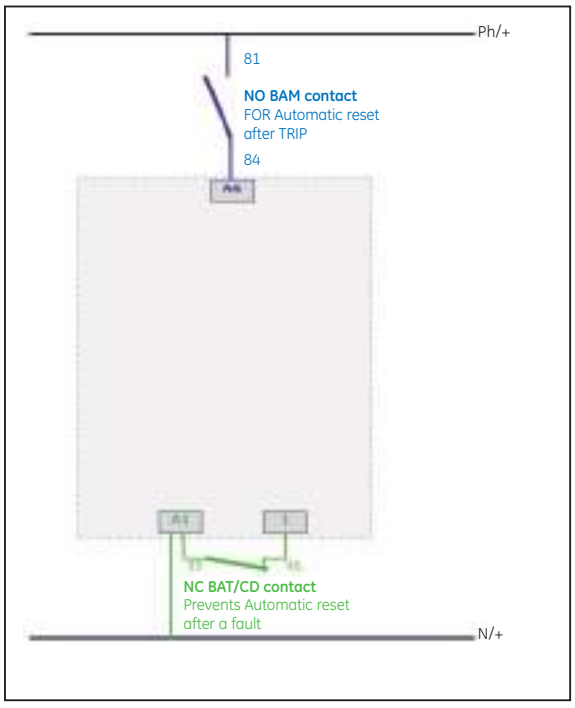

Electrical operators

Factory mountable models schematics

FK frame standard scheme for relay control
For use with NON Automatic breakers or in cases where no RESET functionality is required. Use alternate marked in green to black reset after a fault.

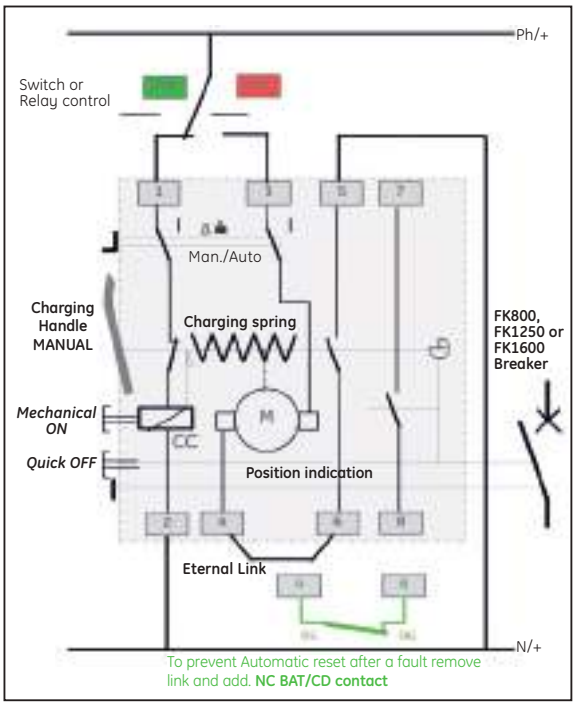

FK frame standard scheme for push button control
For use with NON Automatic breakers or in cases where no RESET functionality is required. Use alternate marked in green to black reset after a fault.

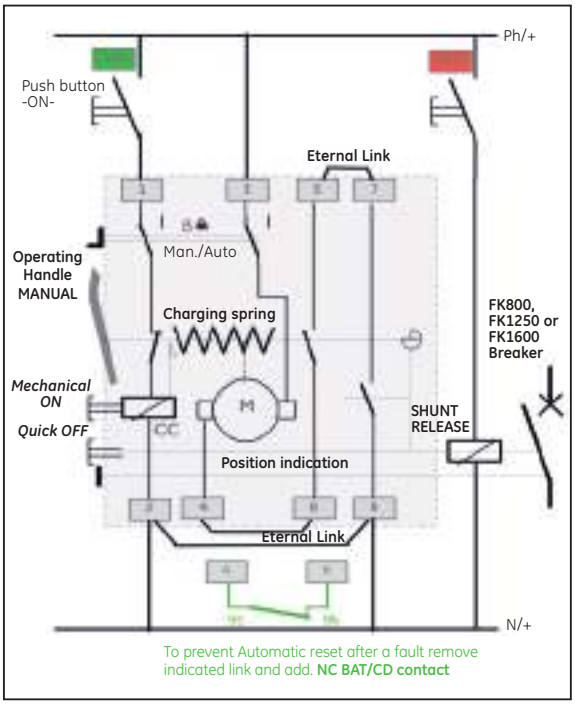

External accessories

Connectivity - 60 mm system

three and four pole

Record Plus™ circuit breakers have been designed to be installed easily and quickly with conventional means. The devices can be screw mounted to a mounting plate or clicked to a symmectrical DIN rail and connected with busbars, cables, flex-bars and ring terminals in a multitude of configurarations.
Connectivity allows the user to limit the breaker installation to a few automateable tasks thus reducing the total costs. An adaptor device, specifically designed for the ***Record Plus™*** breaker line and incorperating all the connection hardware, is fitted to the breaker using a few simple screws. Once mounted the adaptor is then simply plugged on to a three or four pole busbar system already installed in the switchboard.

Busbar system
Based on the generally used 60mm bar spacing standard, a 3 or 4 pole support allow the use of copper bars of the following standardized dimensions.

20 x 5 mm; recommended for 250A
20 x 10 mm; recommended for 400A
30 x 5 mm; recommended for 400A
30 x 10 mm; recommended for 630A

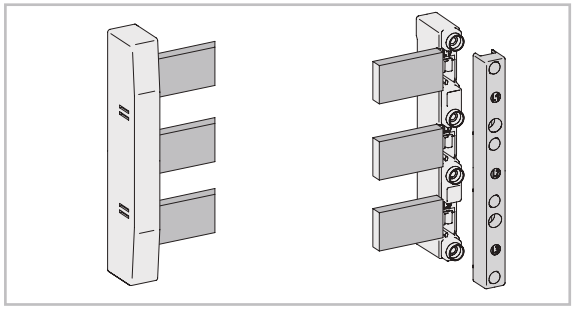

The busbar supports are delivered for uses with copper bars of 30 x 5 mm. By carefully removing material or by using the supplied spacer(s) the other standardized dimensions can be used.

By varying the distance between the supports it is possible to build a three or four pole busbar system with the following short circuit ratings:

Busbar system

Support spacing	Busbar size (mm)	Peak withstand Ipk (kA)	Thermal withstand Icw (kA eff) 1 sec.
200 mm	20 x 5	46	21.9
	20 x 10	50	23.8
	30 x 5	58	27.6
300 mm	30 x 10	63	30.0
	20 x 5	40	19.0
	20 x 10	43	20.5
	30 x 5	52	24.8
400 mm	30 x 10	56	26.7
	20 x 5	35	16.7
	20 x 10	37	17.6
	30 x 5	47	22.4
	30 x 10	49	23.3

Mains connection
The system can be connected from the side or front. The front connection kit makes use of connection modules with connection lugs that are directly plugged on to the busbars. This module comes as a three and four pole unit and allows the connection of conductors from 1.5 to 70 mm^2.
The side connection kit is made up of single pole connectors with terminal covers that allow for the connection of Cu conductors with a cross section of 25 to 300 mm^2.

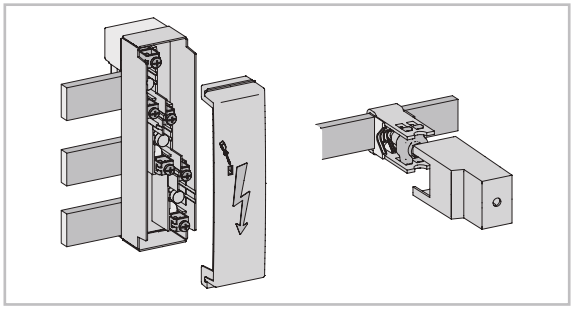

Busbar finishing
Insulating covers are available to protect the user from inadvertent direct contact with the busbar system. These elements have a standard width of 50mm and can be coupled laterally offering variable width in order to cover the busbar not yet covered by breakers or feeding modules.

Endplate covers can be mounted to the busbar supports in order to provide complete protection against inadvertent contact to a busbar from the side.

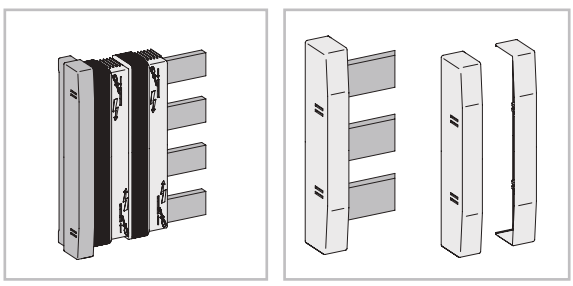

The system

For the ***Record Plus***™ FD and FE frame adaptors exist rated at 160A (FD) and 250A (FE) and in a 3 and 4 pole version. Designed to allow the use of the breaker at its full rated breaking capacity of 150kA at 415V each unit is equipped with a plug/hang on connection system allowing one to place it on the busbar system in one simple operation.

The adaptors have been tested to meet the most stringent requirements and are equipped with a mechanism allowing them to be removed as they were mounted.
Each adaptor is supplied with the necessary fixation hardware and a terminal shield to cover the connection between the breaker and the adaptor.

Adaptor
The breaker and adaptor mounting is simple and easy. The length of the 4 pole adaptor also allows the use of a bottom mounted RCD.

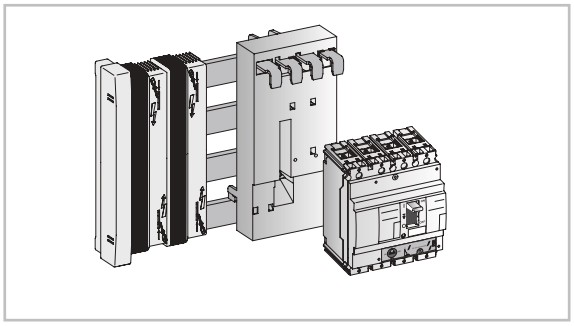

System
Each breaker is fixed on the adapter by means of two pretapped screws at the bottom and its main terminals at the top.
The breaker and adaptor combination is now quite simply plug/hung on to the busbars, connecting and fixing the breaker in one simple operation.
To allow for a flush-front finishing the adaptors have been designed to adapt to the difference in breaker depth and can be used with the standard FD and FE frame sizes (FD type without DIN-rail adaptor).

Finishing
The system can be finished with a cover/trim plate that can be found in the GE enclosure/systems catalogue. To allow for a standard cut-out within the cover/trim plate a filler piece is available in lengths of of 1.2 m. This filler plate is adapted to the ***Record Plus***™ standard front cut-out of 64 mm.

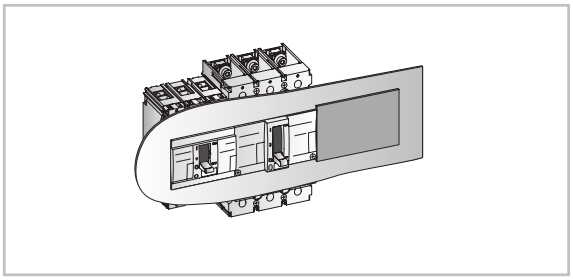

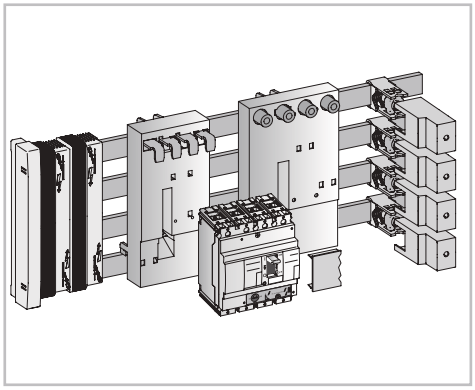

External accessories

Interlocking systems

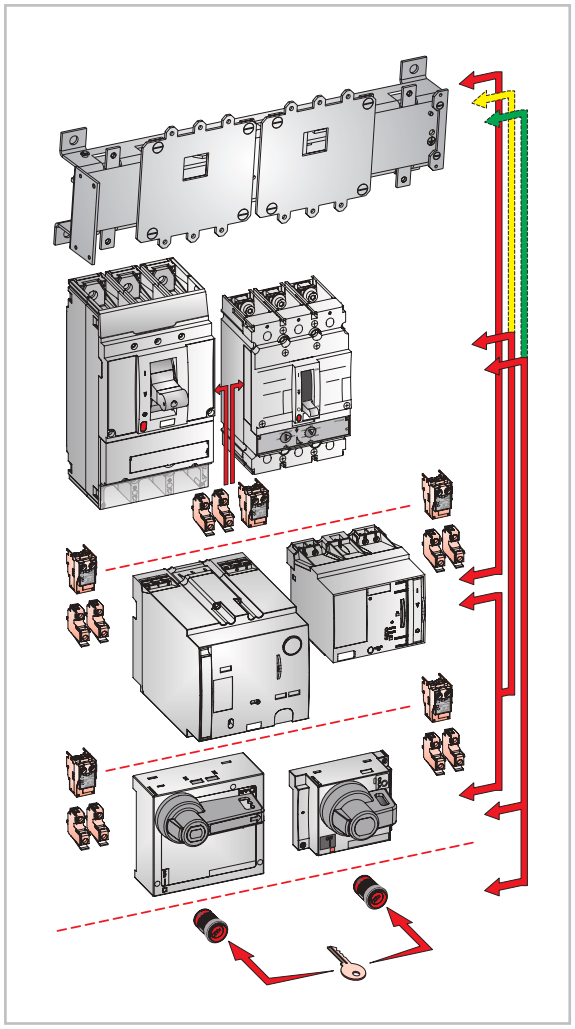

Mechanical interlocking

Record Plus™ circuit breaker are designed for use with a number of mechanical interlock systems suitable for use with thermal magnetic, magnetic only, non automatic and electronic circuit breakers. Each system only permits one of the two interlocked devices to be switched to the 'on' position.

Two systems are available
Mechanical interlocking by equipping both devices with a rotary handle and cylinderlocks with the same key number (2 locks one key).

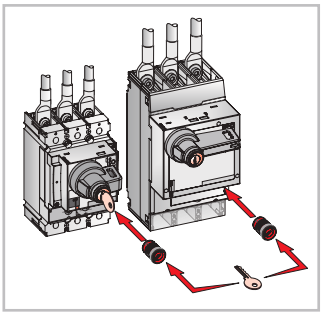

As all breakers use the same RONIS 1104B lock type all breaker combinations are possible.

The use of an interlock unit mounted behind the two devices, here the breakers are fitted on to pre-assembled adapter plates that allow the breaker to interface with the interlock unit.

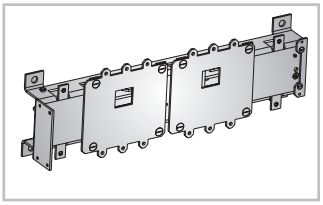

The device allows the interlocking of two breakers of equivelant or different frame sizes. The following combinations are possible:

- One 3 or 4 pole FE frame (10-250A)
  + One 3 or 4 pole FE frame (10-250A)
- One 3 or 4 pole FG frame (100-630A)
  + One 3 or 4 pole FG frame (100-630A)
- One 3 or 4 pole FK frame (320-1600A)
  + One 3 or 4 pole FK frame (320-1600A)
- One 3 or 4 pole FG frame (100-630A)
  + One 3 or 4 pole FE frame (10-250A)
- One 3 or 4 pole FK frame (320-1600A)
  + One 3 or 4 pole FG frame (100-630A)

Electrical interlocking

Two devices can be electrically interlocked by using a combination of shunt and/or undervoltage releases with auxiliary contacts of the early closing and breaking type. The ***Record Plus™*** undervoltage and shunt release are designed to allow their use as interlocking devices and use a twin coil actuator design. Rotary handle mechanisms are available with early closing and breaking auxiliary contacts.

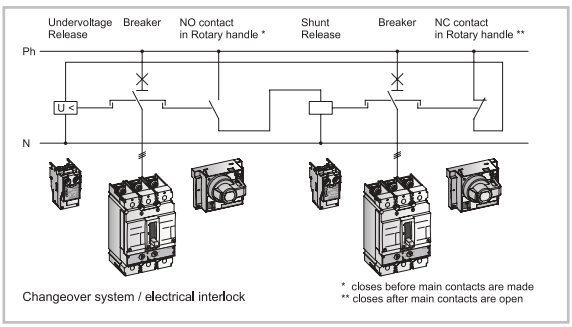

Notes

Versions

Plug-in

The ***Record Plus™*** plug-in version allows quick, safe and easy interchange of breakers. It is made up of a "standard" fixed-front-connection breaker, a set of plugs, a trip mechanism fitted to the breaker and a monoblock base into which the breaker is plugged.
When the breaker is removed from the plug-in base it trips automatically (main contacts open) before the plug-in contacts in the base are disconnected.
The breaker can be operated (closed and opened) when removed from the plug-in base. On attempted insertion of a breaker in the "On" position into the plug-in base, the ***Record Plus™*** breaker trips before the plug-in contacts in the base are connected.
The ***Record Plus™*** plug-in version is available for:
FD frame sizes FD63/160 (maximum 125Amps)
FE frame sizes FE160/250 (maximum 250Amps)
FG frame sizes FG400/FG630 (maximum 630Amps)

FD and FE frame sizes equipped with "bottom mounted RCD unit" can also be transformed into the plug-in version. The mobile part of the plug-in version remains the same (plugs and trip mechanism do not change).
The fixed plug-in base is of a different, elongated type and has a seperate catalogue number.

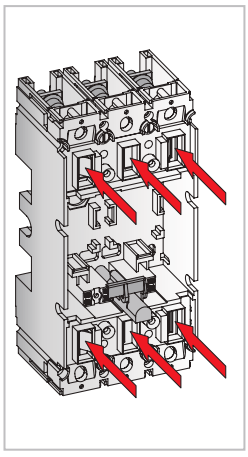

Mobile part

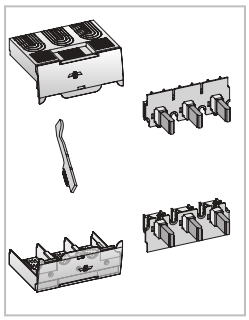

The mobile part that is fitted to the breaker is made up of a multi-pole set of plugs that displace the standard front connection. It also includes a trip interlock, that, when mounted, trips the breaker on its removal from the base. To prevent re-insertion under fault condition the same system also trips the breaker on re-insertion.
The set is completed with Tamper free terminal shields to prevent acess to live parts. The shields have specific areas designed to handle the device on insertion or removal.

Fixed part
A monoblock base that can be mounted to a backplate or on profiles and offers IPXXB protection for front access (FD - IP20, FE and FG - IP40).
It is designed to have exactly the same connection profile as the breaker it goes with, thus allowing the installation of all terminal shields and terminals that the standard breaker offers. These include rear and angular connectors, spreaders, customized ring terminal connectors and extenders.
The base is connected by re-ultilising the nut inserts and connection bolts supplied with the breaker.

Spares
Kits are available containing a number of trip interlock mechanisms, breaker nut inserts and connection bolts. The kits can be used in cases where the bases must be connected and where breakers have not (yet) been supplied.

Accessories
Several optional accessories are available. To allow the use of internal accessories in a plug-in configuration the wiring can be connected through plug and socket combinations. To prevent the incorrect insertion of a breaker of one amp rating into a socket pre wired for an other amp rating interchange prevention kits are available.

Please refer to page C.27.

Versions

Plug-in

A draw-out version allows one to visibly and positively disconnect the mains supply from the installation.
Like on the plug-in device, interchanging breakers quickly, safely and effectively is one of the key features of ***Record Plus™*** draw-out. It is made up of a breaker ("standard" fixed front connection version), a set of plugs and a trip mechanism that are fitted to the breaker, a monoblock base into which the breaker is plugged and a metal support cradle.

The cradle allows for placing the breaker in one of three positions:
Connected: Main and auxiliary contacts are fully connected to the base
Test/Disconnected: Main contacts are disconnected. Auxiliaries can be connected or disconnected. This allows for a complete test of the secondary wiring/functionality without having the mains connected.
Remove: Main and auxiliary contacts are fully disconnected from the metal support cradle and the plug-in base, the breaker can be removed.

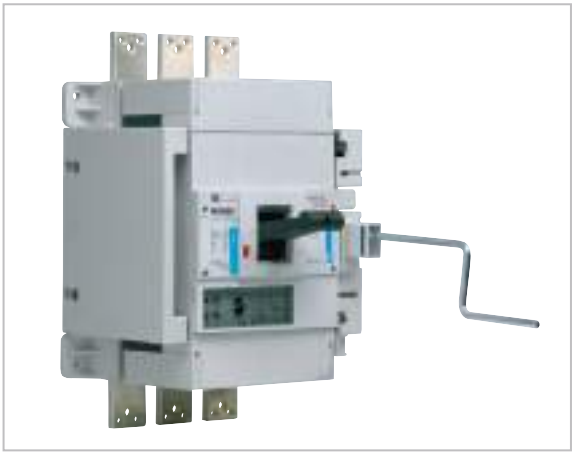

FE frame (max. 250A) & FG frame (max. 630A)
The draw-out device is supplied as complete entity including a mobile and fixed part allowing the conversion of a standard fixed front connection breaker to a draw-out type.

Each kit contains a sturdy metal chassis with plug-in base that serves as a fixed part and a kit allowing the conversion of a fixed front connected breaker.

The moving part makes use of metal side supports, multi pole plugs that displace the standard breaker front connection system and a trip interlock system. The Trip interlock system has an **unique safety feature** that trips the breaker on removal from it's base and prevents re-insertion under fault condition by tripping the breaker. Two Tamper free terminal shields prevent acess to live parts.

The fixed component of the kit includes an integrated standard plug-in base encapsulated in a sturdy metal chassis. The base is connected by re-ultilising the nut inserts and connection bolts supplied with the breaker. All standard terminal shields terminals, rear connection facilities & lugs available for the standard fixed front conection breaker can be used with this plug-in base.

see page C.25 for more details.

FK frame (max. 800A) & FK frame (max. 1600A)
The draw-out device is supplied as complete entity including a mobile and fixed part allowing the conversion of a standard fixed front connection breaker to a draw-out type.

Each kit contains a sturdy polyester I chassis with integrated plug-in base that serves as a fixed part and a kit allowing the conversion of a fixed front connected breaker.

The moving part makes use of metal side supports, multi pole plugs that displace the standard breaker front connection system and a trip interlock system. The Trip interlock system trips the breaker on removal from it's base. Two Tamper free terminal shields prevent access to live parts.

The cradle and plug-in base are integrated to form one moulded part. Two types exist one with FRONT and one with REAR connections both allowing the use of the standard connection lugs used on the device in fixed execution.

The FK frame draw-out system is always supplied with a door frame suitable for use as a through door solution and including a position indication system. The door frame allows the locking of the device in draw-out position with one or two Ronis 1104 B locks.

See Page C.27 for more details

Versions

Draw-out, FE & FG frame

Standard draw-out device

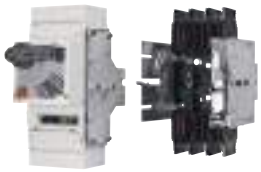

The draw-out device is supplied as complete entity including a mobile and fixed part allowing the conversion of a standard fixed front connection breaker to a draw-out type. It includes a racking handle and can be used 'behind door' without any additional accesories.

Draw-out position...Withdrawn

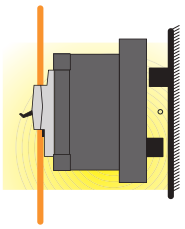

In this position the Mains and Auxiliary contacts are disconnected and the breaker can be removed from the chassis. Both the Mains and Auxiliary contacts are protected against inadvertent contact.

Draw-out position...TEST

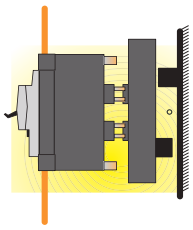

In this position the Mains contacts are disconnected and isolated from the network. The Auxiliary contacts are connected thus allowing the breaker's secondary circuits to be tested. When a plug and socket is used an MCCB style TEST position is achieved, with 8 pole draw-out disconnects an ACB style TEST position.

Draw-out position...Inserted

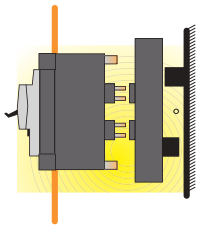

In this position the Mains and Auxiliary contacts are connected.
A protection degree of IP40 is possible.

Draw-out device Accessories. Through door euchenon

The F-WE kit the device allows the breaker to be mounted behind a door whilst the draw-out eucheneon is located on the door front (three optional panel depths are possible).

The eucheneon offers the following facilities:
- racking handle storage area
- position indication Inserted - test - Withdrawn
- padlocking facility for a max. of three 5-8 mm padlocks.
- keylocking facility allowing the use of two Ronis or Profalux lock types.

Draw-out device Accessories. Through door options

The F-WT kit the allows the toggle handle operator and the draw-out eucheneon to be accessed on the door front.
The kit includes an elongated toggle handle, an extension frame, a doorflange and the through door eucheneon with it's locking and position indication features.

The F-WN kit allows the a through door Rotary handle operator and the draw-out eucheneon to be accessed on the door front.
The kit includes an extension frame, a doorflange and the through door eucheneon with it's locking and position indication features.

The F-WM kit allows the operating panel of a Record Plus Electrical operator and the draw-out eucheneon to be accessed on the door front.
The kit includes an extension frame, a doorflange and the through door eucheneon with it's locking and position indication features.

Draw-out device Accessories.
Door mounted Rotary handle option

The F-NRW kit allows the use of a door mounted rotary handle providing a depth adjustability between the inserted and withdrawn position. Combined with the F-WE kit the draw-out eucheneon and operating handle can be accessed on the door front.

Draw-out device Accessories.
Carriage Indication Contacts

Two different sets are available one with 1 NO indication contact per position (total 3 NO contacts) and a second with 1 NO and 1 NC contact per position (total 3 NO + 3 NC contacts).
These sets came as easy to fit and connect field mountable kits.

Draw-out, FE & FG frame

Accessories

Auxiliary disconnect plugs and sockets(1)

Plug-in FD, FE & FG frame 8 pole plug(1)

A set made up of a plug screwed to the breaker back (mobile part) and a socket that clicks into the plug-in base (fixed part). The socket comes with connected colour coded wiring which allows for an easy identification of the connection points.The wiring can be passed through specifically designed channels that lead from the breaker rear into the accesory compartment.
The socket part can be wired out from the base with wiring up to 2.5 mm^2 (front access). Each unit has a total of 8 poles. The number of connectors that can be used per breaker frame size is as follows:

Frame size	FD63/160	FE160/250	FG400/630
Nos of units	1	2	3
Pin Codes (per connector)	1 - 8	1 - 8	1 - 8
Connector coding	X	X & Y	X, Y & Z

Draw-out FE & FG frame 8 pole plug(1)

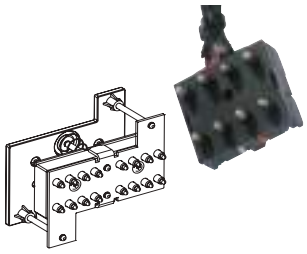

Meeting the same standard specifications as the 8 pole plug for the Plug-in version (see above) the kit now includes an adpated fixed part that allows an ACB TEST position to be created.

The accessory is available as 16 pole (2 - 8 pole units) or 24 pole kit (3 - 8 pole units). When mounted, this accessory allows the user to test the functionality of the installed accessories in the TEST position whilst allowing an easy connection and disconnection of the secondary circuits in the Inserted and Withdrawn position.

Frame size	FE160/250	FG400/630
Nos of units	2	3
Pin Codes (per connector)	1 - 8	1 - 8
Connector coding	X & Y	X, Y & Z

(1) In order to ensure a consistant and traceable wiring diagram of all internal accessories in each frame sizes a standard scheme is included in the wiring diagram chapter F of this catalogue (use is optional).

FD, FE and FG frame - 10 pole type(1)

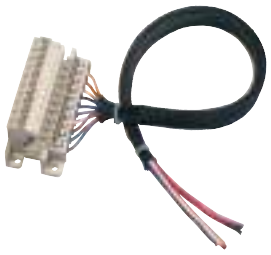

A set made up of a socket that can be attached to the plug-in base or a draw-out cradle and a plug with wiring that is connected to the accessories.
The set is used to allow for a test position on a draw-out breaker of the FE and FG frame sizes and as a supplementary connector for internal accessories on the FD and FE frame sizes.
Each plug and socket has a total of 10 poles.
The plug is fitted with supple wire, cross section 0.75 mm^2, length 60 cm. Maximum mounting per breaker size is:

Frame size	FD63/160	FE160/250	FG400/630
Nos of units	2	2	2
Pin Codes (per connector)	1 - 10	1 - 10	1 - 10
Connector coding	EL & ER	EL & ER	EL & ER

Rating interchange prevention system

When a number of plug-in or withdrawable breakers (same frame different ratings) are installed in the same panel, it becomes necessary to determine which rating fits into which plug-in base. This to prevent overload in the cables/conductors connected to the base, the size of which are determined by the breaker trip unit value or setting.
A specifically designed ***Record Plus™*** accessory prevents misinsertion of a wrongly configured breaker/trip-unit combination in the base.

The accessory consists of two parts (one code per breaker), one fixed on the base, the other on the rear of breaker. Depending on the placing of the red part in the plug-in base and the pin the user breaks out on the white part, up to 4 breakers can be equipped with this mutual rejection feature.

Versions

Draw-out, FK frame

Standard Draw-out device

The draw-out device is supplied as complete entity including a mobile and fixed part allowing the conversion of a standard fixed front connection breaker to a draw-out type. It includes a racking handle and can be used 'behind or through door' without any additional accessories. The draw-out device is available with front or Rear connections.

Draw-out position...Withdrawn

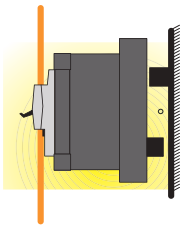

In this position the Mains and Auxiliary contacts are disconnected and the breaker can be removed from the chassis. Both the Mains and Auxiliary contacts are protected against inadvertent contact.

Draw-out position...TEST

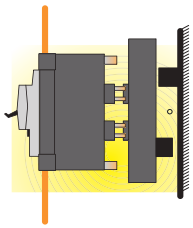

In this position the Mains contacts are disconnected and isolated from the network. The Auxiliary contacts are connected thus allowing the breaker's secondary circuits to be tested. With the standard 6 pole auxiliary disconnects an ACB style TEST position is possible.

Draw-out position...Inserted

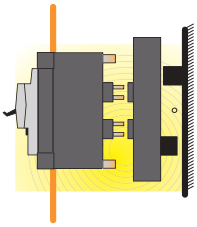

In this position the Mains and Auxiliary contacts are connected. A protection degree of IP40 is possible.

Operation

The standard device is supplied with a through door frame that with draw-out position indicators and the possibility of mounting one or two keylocks locking the device in it's drawn out position.

1.The Breaker is operated by an elongated toggle.(depicted)
2.The Breaker is operated by a Electrical Operator. For through door access of the electrical operator a door flange is required.
3.The Breaker is operated by a door or panel mounted Rotary Handle. A F-NRW kit allows the use of this handle providing a depth adjustability between the inserted and withdrawn position.

Eucheneon

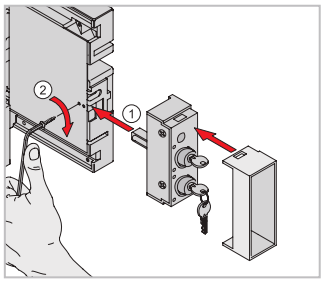

Each draw-out device is supplied with a eucheneon, fitted on the right hand side of the door frame.
The device allows for the through door use of the draw-out racking handle and is equipped with a padlocking device allowing the user to lock the device in withdrawn position with up to three 5-8 mm padlocks. Optionally a keylock adaptor can be added allowing the uses of two keylocks offering the same locking facilities (recommended for behind door use).

Carriage Indication Contacts

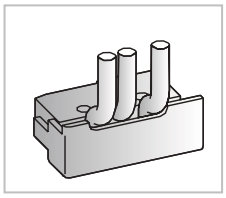

A maximum of two pre-wired change over contacts can be mounted in the fixed portion of the draw-out device One to indicate that the breaker is Withdrawn and a 2nd to indicate that the breaker is inserted.

Auxiliary Disconnect plugs and sockets 6 pole(1)

A 6 pole plug and socket system is available and is used to allow the auxiliary circuits to be connected and disconnected in the same manner as the poles. The plug sits on the back of the breaker and the socket clicks into the base.

On withdrawing and inserting the breaker the 6 pole plug and socket system only disconnects and connnects once the test position has been reached. This allowing for a test position without a seperate plug and socket. The FK socket part can be wired out from the base with wiring up to 1.5 mm^2 (front access).

Frame size	FK800/1600 3p	FK800/1600 4p
Nos of units	4	5
Pin codes (per connector)	1 - 6	1 - 6
Connector coding	X, Y, Z & A	X, Y, Z, A & B

(1) In order to ensure a consistant and traceable wiring diagram of all internal accessories in each frame sizes a standard scheme is included in the wiring diagram chapter F of this catalogue (use is optional).

Installation

Padlocking device for toggle handle

To allow users to safely work on installations or installation segments protected by the ***Record Plus***™ moulded case circuit breakers it is possible to padlock the devices in their OFF position.

This ensures a complete and safe isolation of the installation or installation segment from the power supply. Two different padlocking devices are available.

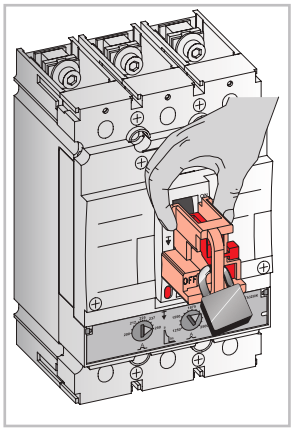

The ***Record Plus***™ removable padlock is firmly attached to the breaker when it is padlocked and can be removed for use on another breaker when not in use. This accessory can be used with up to 3 padlocks of 5 to 8 mm. It is available in three different versions: one for the ***Record Plus***™ FD and FE frame, one for the FG frame and a third for the FK frame.

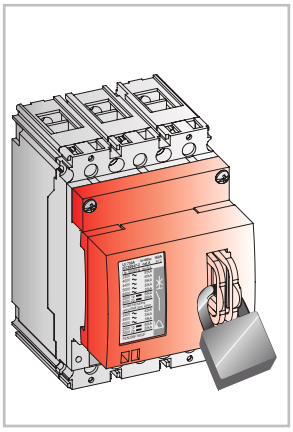

A padlocking facility that is screwed on to the breaker front and normally remains mounted. This device allows the breaker to be locked in the OFF position with up to three padlocks of 5 to 8 mm. The device also covers the push to trip knob.
It is available in three different versions for the ***Record Plus***™ FD, FE and FG frame.

Keylocking devices

Record Plus™ moulded case circuit breakers can also be locked in their OFF position by the use of a Keylock. This to allow users to work on installations or installation segments or to interlock one or more breakers. Keylocks are available for all Rotary handle devices, electrical operators and draw-out systems.

Pad- and Keylocking options, applicable for Record Plus Breakers

Overview	Frame size	Padlock		Standard Ronis key lock	Specifically numbered Ronis key lock	Profalux key lock
		Fixed	Removable			
Toggle operator Breaker locked in "OFF" position	FD Frame	A(1)	A			
	FE Frame	A(1)	A			
	FG Frame	A(1)	A			
	FK Frame	A(1)	A			
Directly mounted rotary handle Breaker locked in "OFF" position	FD Frame	S(1)		A	A	A
	FE Frame	S(1)		A	A	A
	FG Frame	S(1)		A	A	A
	FK Frame	S(1)		A	A	A
Through panel or door type of rotary handle Breaker locked in "OFF" position	FD Frame	S(1)		A	A	A
	FE Frame	S(1)		A	A	A
	FG Frame	S(1)		A	A	A
	FK Frame	S(1)		A	A	A
Panel or door mounted rotary handle Breaker locked in "OFF" position	FD Frame	S(1)		A	A	A
	FE Frame	S(1)		A	A	A
	FG Frame	S(1)		A	A	A
	FK Frame	S(1)		A	A	A
Electrical drive Breaker locked in "OFF" position	FD Frame	S		A		A
	FE Frame	S		A		A
	FG Frame	S		A		A
	FK Frame	S		A		A
Draw-out version Locked in Disconnected/Test (2) OR draw-out position	FE Frame	S		A		A
	FG Frame	S		A		A
	FK Frame	S		A		A

S= standard feature, A = accessory needed, empty box = not foreseen
(1) the explicitly removing of a plastic part directly beneath the handle operator allows one to padlock or keylock in ON position (special applications).
(2) FE and FG; Disconnected/test; FK Draw-out position.

Door flanges

In order to provide an IP40 protection degree of the breaker when mounted through a door or cover plate door flanges are used. A door flange also improves the aesthetics of the cut-out in the door and allows for higher tolerances within the cut-out.

The devices are available for cut-outs with the toggle area, breaker front face, motor drive front face or on RCD operating panels. A second type of flange is used for rotary handles through door/cover allowing interlocks on the device to function correctly.

For ***Record Plus™*** breakers installed through doors, cover plates or panels the following door flanges are available:

Toggle area
Fixation via front with 2 or 4 screws, universal for 3 and 4 pole breakers.

	Type
FE frame	**FEFT**
FG frame	**FGFT**
FK frame	**FNFT**

Front face
Fixation via front with 4 screws, available for 3 and 4 pole breakers

	Type
FD frame 3p	**FDFF3**
FD frame 4p	**FDFF4**
FE frame 3p	**FEFF3**
FE frame 4p	**FEFF4**

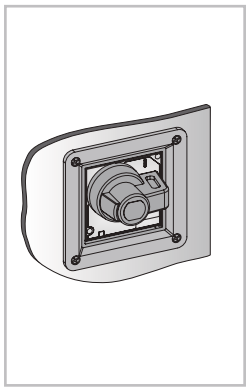

Rotary handle (1)
Fixation via front with 4 screws; is required to allow use of the door lock in ON position with the through door/panel rotary handle type. Is available for:

	Type
FD & FE frame	**FDFH**
FG frame	**FGFH**
FK frame	**FNFH**

(1) Please use specifically designed compelte though door kits for the FE and FG frame draw-out system.(see page C.25)

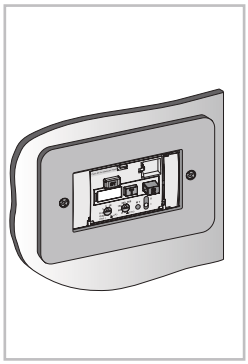

RCD bottom mounted type
(universal for FD, FE and FG)
Fixation via front with 4 screws

	Type
FD frame 3p	**FDFF3**
FD frame 4p	**FDFF4**
FE frame 3p	**FDFF3**
FE frame 4p	**FDFF3**
FG frame 3p	**FDFF3**
FG frame 4p	**FDFF3**

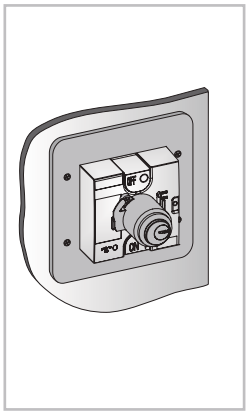

Electrical operator
Fixation via front with 4 screws. The FK type can be used with the draw-out system.(1)

Available for:

	Type
FD frame	**FDFE**
FE frame	**FEFE**
FG frame	**FGFE**
FK frame	**FNFE**

Installation

Terminal shields

Terminal shields are installed on the incoming or outgoing side of the breaker thus achieving a heightened protection degree, independent of the type of connection used. For fixed breakers with rear connnection or the plug-in or withdrawble versions of the ***Record Plus™*** breaker the installion of short terminal shields is mandatory and they are normally supplied as part of the kit.

Record Plus™ terminal shields are equipped with a tamper free sealing facility and come in sets of two. They are available in a short or a long version and have been designed for use on the standard fixed front connection breaker or on the base used for plug-in breakers.
Each terminal shield is equipped with easy to remove breakouts to facilitate the connection of the breaker.

Short type(1)
For use with internal box clamps and rear connection.

Long type(2)

Short terminal shields

	FD	FE	FG	FK
With two terminal shields mounted, Breaker heighth is increased by: (mm)	20	30	60	40

(1) The FK short type is only supplied with rear connection kit.

Long terminal shields

	FD	FE	FG(2)	FK
With two terminal shields mounted, Breaker heighth is increased by: (mm)	97	122	83	160

(2) The FG type is of medium length. Special long and widened version available on request.

Finger protection caps
Available only for the D frame box terminals, the caps prevent inadvertent contact with the connection terminals, thus providing the terminal and breaker with an IPXXB protection.
Finger protection caps come as standard with the magnetic only circuit breakers but they are also available in a set containing 12 pieces.

FD frame adaptors

DIN-rail mounting

All ***Record Plus™*** FD frame breakers can be installed on a (symmetric) DIN profile (EN50022) by using an adaptor. The DIN-rail adaptor is normally supplied with most breaker types but can also be purchased seperately.

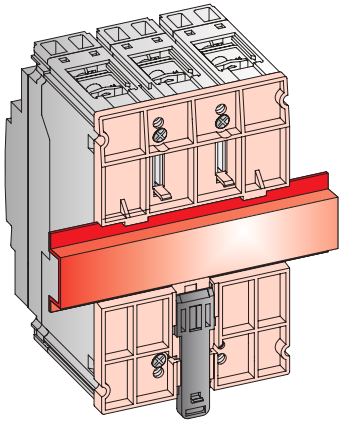

Adaptor - Cut-out filler

To use the cut-out with the breaker face and trip unit just apply the 'cut-out adaptor' to the D frame trip unit. This sealable cover matches the cut-out perfectly and offers an aestheticly pleasing blending of both breaker fronts.

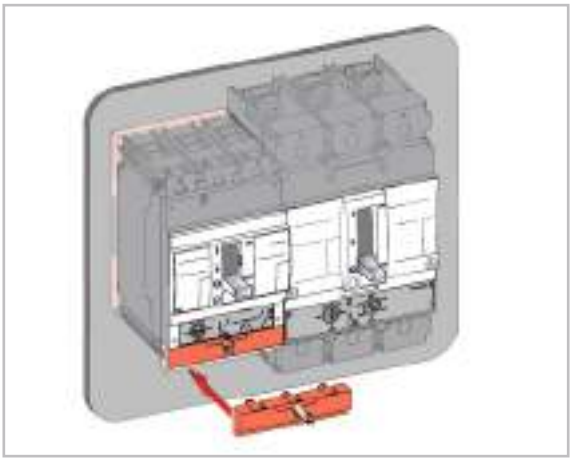

Side by side mounting with FE frame breakers

The FD frame DIN-rail adaptor has a second application: when mounted with its DIN-rail mounting feature facing the breaker rear it serves as a heightner. This change in depth of the D frame allows side by side mounting with E frames. When reversed the adaptor turns into a heightner that lifts the D frame, and all its cut-outs up to the E frame level. The 64 mm cut-out of the D and E frame now match up fully in height and depth.

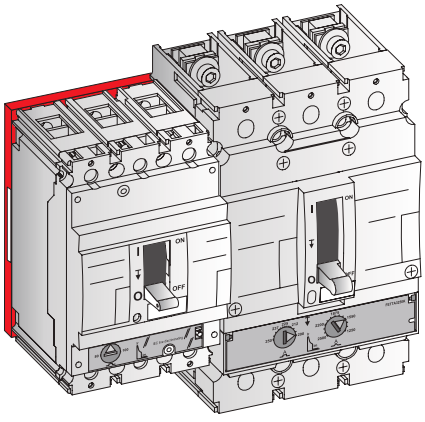

Adapator - Side by side mounting with ElfaPlus MCB's

The FD frame has a 45 mm cut-out allowing it's use next to Elfa Plus MCB's and other modular devices. To bridge the diffference in depth between the FD frame and the modular devices a special heightning kit is available in a standard length of 354 mm.

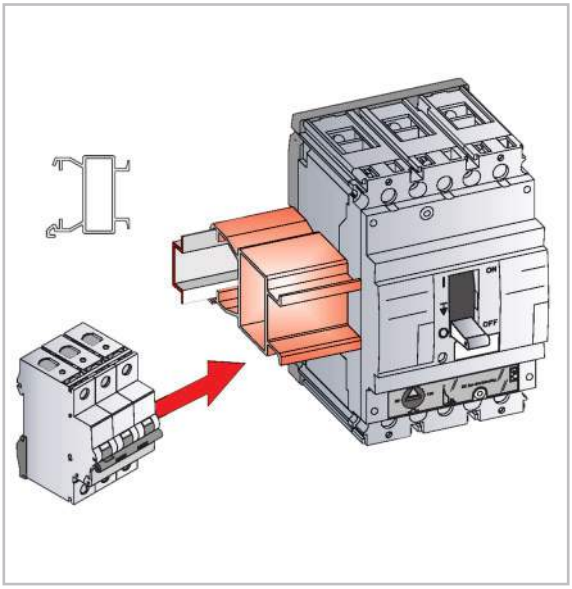

Installation

Finishing covers

FD frame

For the ***Record Plus™*** FDS, FDN, FDH and FDL types the finishing covers are standard. By adding both these covers and the finger protection caps the breaker has a protection degree of IP40.

FE, FG and FK frame

All ***Record Plus™*** FE, FG and FK frame breakers come complete with finishing covers (for 3 or 4 pole versions). However, these covers are also available as seperate items.

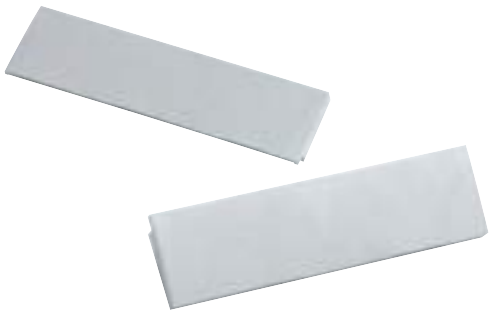

Circuit identification label

Located just under the toggle of every ***Record Plus™*** circuit breaker there is an area allocated specifically to click in a circuit identification label.
A set contains 20 units that are common for all frame sizes.

Cut-out filler plate

The FD & FE frame sizes are designed for side by side mounting.The cut-out suited for use with both breaker types has a standard dimension of 64 mm. In order to fill in empty or reserve space in the trim/cover plate,a cut-out filler plate is available in a standardized length of 1.2 meters.

Mounting positions

Allowed mounting position per frame size

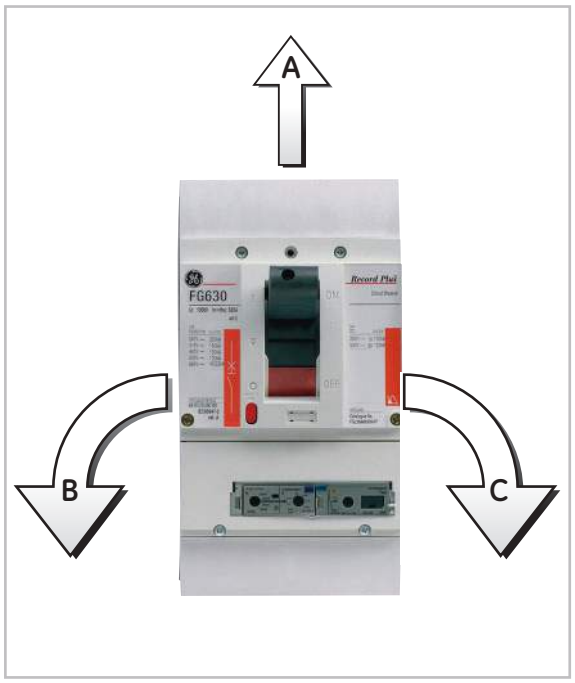

Breaker supply

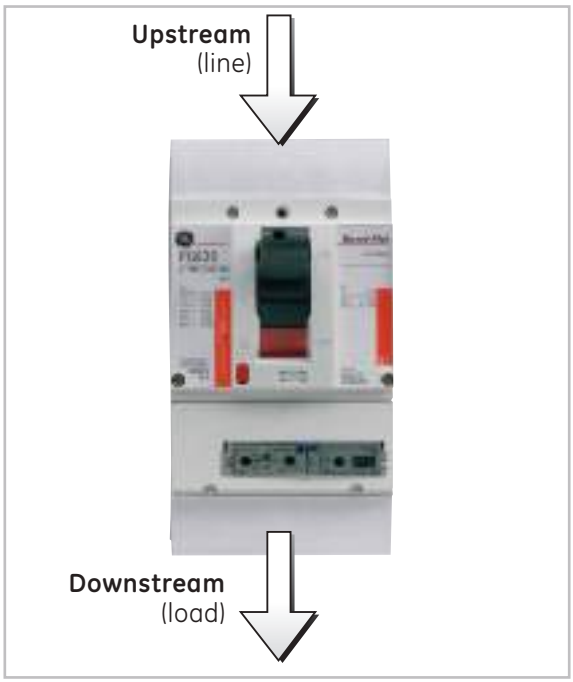

Breaker	Version	A	B	C
FD63/160	DIN rail	X	X	X
	Fix	X	X	X
	Plug-in	X	X	X
FE160 / FE250	Fix	X	X	X
	Plug-in	X	X	X
	Draw-out	X	X	X
FG400 / FG630	Fix	X	X	X
	Plug in	X	X	X
	Draw-out	X	X	X
FK800 / FK1600	Fix	X	X	X
	Draw-out	X	X	X

Phase/phase voltage Un (AC/DC)	Supply side is:	FD63/160 C, E, S	FD63/160 N, H, L	FE160 FE250	FG400 FG630	FK800 FK1600
220/240V	Upstream	A	A	A	A	A
	Downstream	A	A	A	A	A
< 500 V	Upstream	A	A	A	A	A
	Downstream	A	A	A	A	A
≥ 500V	Upstream	P	P	P	P	P
	Downstream	P	PB(1)	PB(2)	PB(2)	P

A= Allowed
P= Use of phase separators is obligatory.
PB= Use of phase separators and backplate is obligatory.

(1) The use of the top cavity in the box terminal is mandatory.

(2) Applies for N type only; H & L types Upstream FEED ONLY

Connections

Standard connection terminals

The ***Record Plus™*** connection facilities have been designed with the user in mind.
Easy access to the area where the conductor must be placed, their generous dimensions and their inherent stability assure an easy connection.
Each of the standard connection options described here applies to the fixed breaker, its plug-in or draw-out base and the RCD associated with the frame size.

FD frame

The FD frame is equipped with box clamps allowing the direct connection of one or two cables. The clamps can also be used with flat bars up to a width of 12 mm. All 'non standard' connection terminals as extenders, rear connections etc. are directly connected to these standard terminals. The breaker is always supplied with the clamps fully open, and they are equipped with a mechanism that prevents them from inadvertently closing whilst connecting.

FE frame

The FE frame size has a connection area specifically designed for the connection of busbars and/or cable lugs. The connection area is designed to allow for maximum access to the front of the terminal. Standard busbar sizes and cable lugs can be accommodated without accessories.
The connection pads have through holes and are supported by a simple slide-in fully insulated part that contains one steel nut per connection point. The connection bolts have an internal allen key profile allowing for ease of use in the relatively confined area just above the connection strap.
'Non-standard' connections as extenders are directly fitted onto the standard terminals. In other cases - like rear connections - the slide-in part is completely replaced.

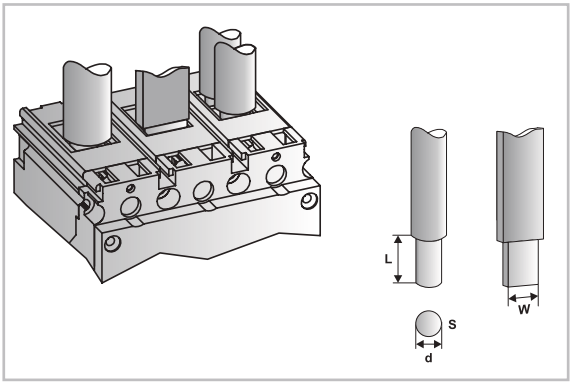

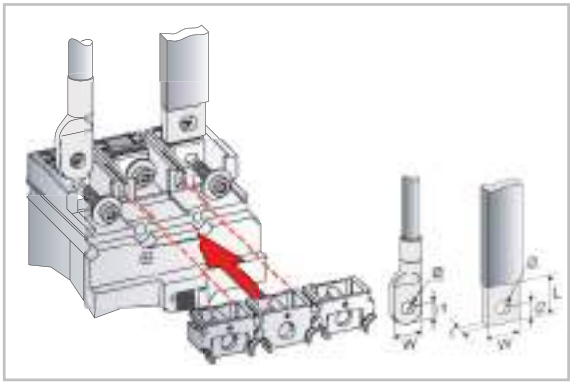

FD frame box terminals(1)

	FDC & FDE types ≤100A	All other FD types
Single cavity lug Connection capacity mm^2	2.5 - 70	
Dual cavity lug	-	
Top cavity only Connection capacity mm^2	-	2.5 - 95
Bottom cavity only Connect. capacity mm^2	-	4 - 70
Both cavities Top Connection capacity mm^2	-	2.5 - 35
Bottom Connect. capacity mm^2	-	4 - 35
Strippable length L (mm)	17.5	17.5
W max (mm)	12	12
Torque (Allen key in breaker) (Nm max.)	6	8

(1) For aluminium conductors use external box clamps.

FE frame with removeable cover

	FE
W max (mm)	25
t max (mm)	5
i1 max (mm)	11.5
i2 max (mm)	9.8
Ø max (mm)	9.5
L Distance to insulation (min.)	25
Torque (Allen key in breaker) (Nm max.)	25

W = Width of bar or ring terminal / lug
t = Thickness of bar or lug
Ø = Hole diameter

FG frame

The FG frame size has a connection area specifically designed for the connection of busbars and/or box clamps. The connection area is designed to allow for maximum access to the front of the terminal. The connection pads have through holes without screw thread and are supported by a simple slide-in fully insulated part that contains one steel nut per connection point. The connection bolts have an internal allen key profile allowing for ease of use in the relatively confined area just above the connection strap.
'Non-standard' connections as extenders are directly fitted onto the standard terminals. In other cases - like rear connections - the slide-in part is completely replaced.

FK frame

The FK frame has a connection area specifically designed for the connection of busbars. For the FK800 and FK1250 sizes the standard connection pads offer a choice of the use of 2 M10 or 1 M12 bolt. The FK 1600 type can use the same connection facility, but the use of specifically designed extended connection pads is advised.
All 'non standard' connection options are fitted to the standard connection pads.

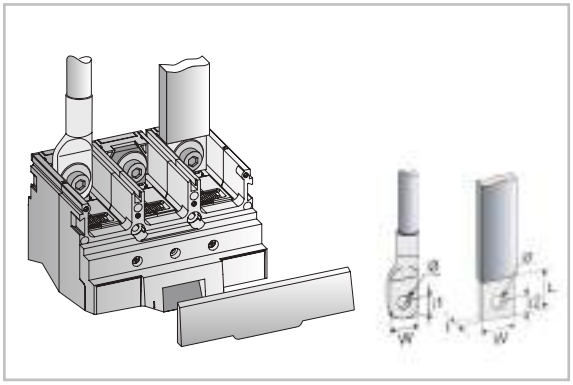

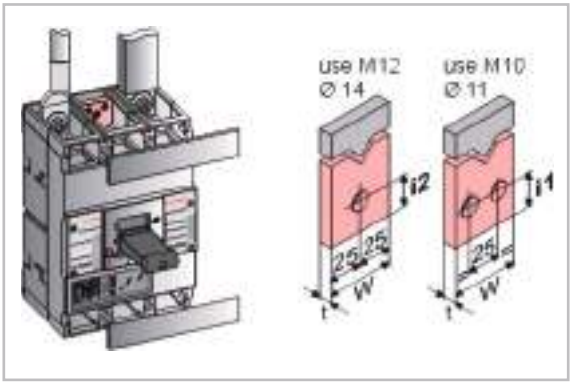

FG frame with removeable cover

	FG
W max (mm)	32
t max (mm)	12
i1 max (mm)	19
i2 max (mm)	17.5
Ø max (mm)	11
L Distance to insulation (min.)	33
Torque (Allen key in breaker) (Nm max.)	42

W = Width of bar or ring terminal / lug
t = Thickness of bar or lug
Ø = Hole diameter

FK frame with removeable cover

	FK
W max (mm)	50
t max (mm)	20
i1 max using 2 x M10 (mm)	32
i2 max using 1 x M12 (mm)	23
Ø max (mm)	2 x 11 or 1 x 14
Torque (Allen key in breaker) (Nm max. M10)	42
Torque (Allen key in breaker) (Nm max. M12)	48

W = Width of bar or ring terminal / lug
t = Thickness of bar or lug
Ø = Hole diameter

Connections

Rear connection facilities

A rear connection kit changes the standard connnection configuration of a fixed, plug-in or draw-out breaker from front to rear access. Delivered as a multi-pole set they allow an easy and quick change in configuration of the standard fixed-front connection breaker to a model where the connection is accessible from the rear.
Each kit is supplied with a short terminal shield to warrant a IPXXB protection from the breaker front.

FD frame

Available as a three or four pole set allowing for the configuration of one side of the breaker. The kits are made up of single pole connectors that are fitted to the standard cage terminal (top cavity). The rear connections are configured for use with busbars and can be rotated at a ninety degree angle to allow for different incoming busbar configurations. The connectors can be used with standard external box clamps, with or without phase barriers, and are supplied with a short terminal shield.

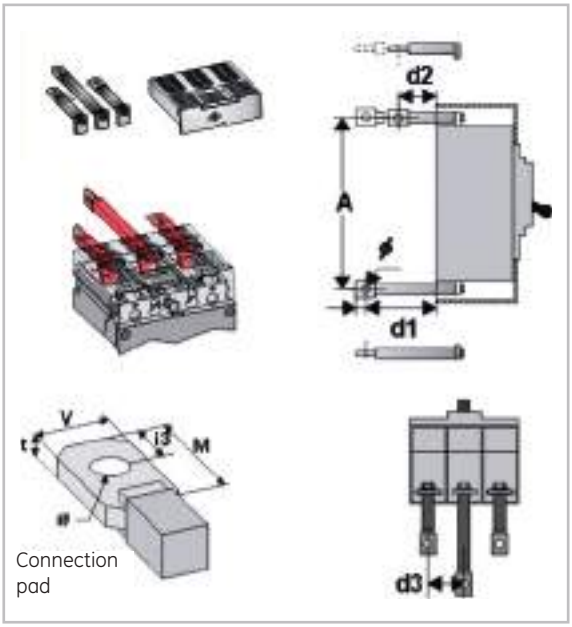

Connection pad

FE frame

Before a ***Record Plus™*** FE frame size can be configured as a rear connected device, the front connection insulation part (nut plate) must be removed. The rear connection kit that consists of a multi-pole kit held in a rear connection support plate can then be simply slid into the room just vacated by the front connection part (nut plate). Available as a three or four pole set, it allows for the configuration of one side of the breaker. The rear connections are configured for use with busbars and can be rotated at a forty five or ninety degree angle to allow for different incoming busbar configurations. The connectors can be used with standard internal box clamps, with or without phase barriers, and are supplied with a short terminal shield.

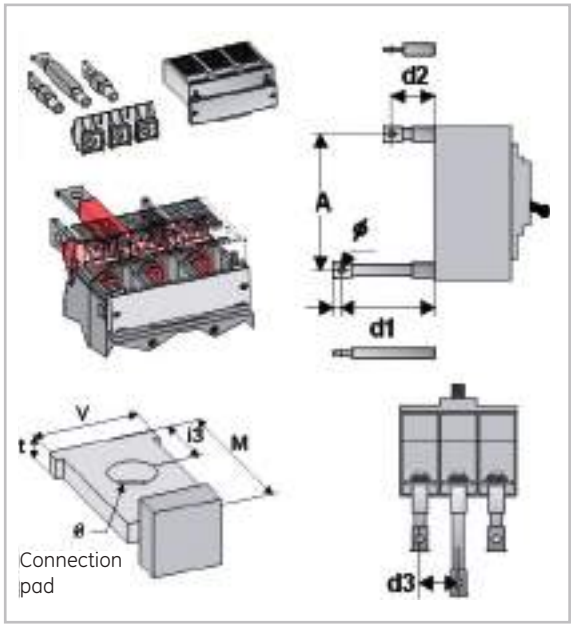

Connection pad

FD frame rear connection

	FD
A = vertical distance between connections	150
d1 = breaker depth with long rear connections	90
d2 = breaker depth with short rear connections	45
d3 = pole spacing	27
V (mm)	14
t (mm)	4
i3 (mm)	10
M (mm)	22
Ø hole max (mm)	7
Torque (Allen key in breaker) (Nm max.)	8
Torque of connection bolt M6 (Nm max).	8

FE frame rear connection

	FE
A = vertical distance between connections	140
d1 = breaker depth with long rear connections	98
d2 = breaker depth with short rear connections	48
d3 = pole spacing	35
V (mm)	17.4
t (mm)	4
i3 (mm)	13
M (mm)	30
Ø hole max (mm)	9
Torque (Allen key in breaker) (Nm max.)	15
Torque of connection bolt M8 (Nm max).	25

FG frame

Before a ***Record Plus™*** FG frame can be configured as a rear connected device, the front connection isolation part (nut plate) must be removed. The rear connection kit that consists of a multi-pole kit held in a rear connection support plate can then be simply slid into the room just vacated by the front connection part. Available as a three or four pole set, it allows for the configuration of one side of the breaker. The rear connections are configured for use with busbars and can be rotated at a ninety degree angle to allow for different incoming busbar configurations. The connectors can be used with or without phase barriers, and are supplied with a short terminal shield.

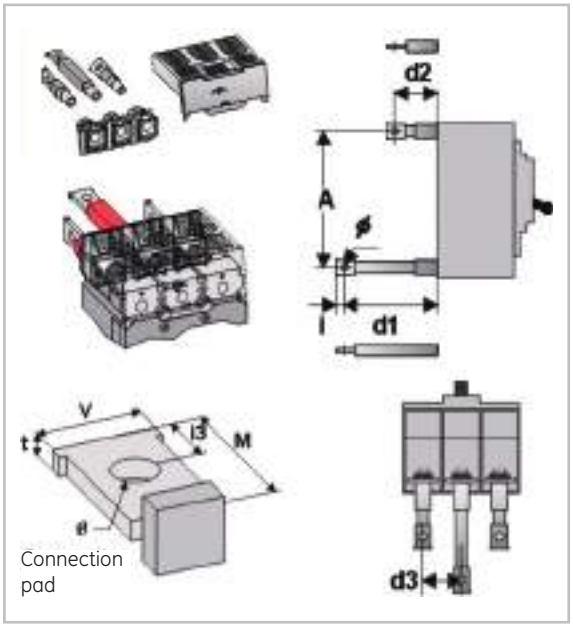

Connection pad

FK frame

Available as a three or four pole set allowing for the configuration of the load or line side of the breaker. The kits are made up of single pole connectors that are screwed to the underside of the standard connection pad. The rear connections are configured for use with busbars and allow for different incoming busbar configurations with a option of rotating them at a ninety degree angle for edgewise busbar connection. The connectors are supplied with phase separators and a short terminal shield.

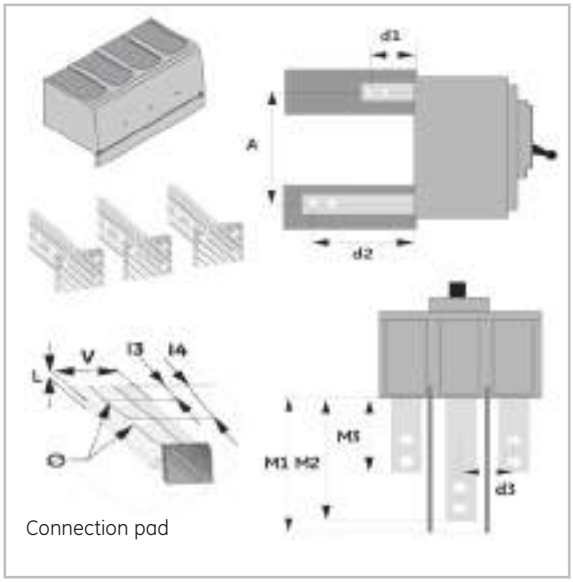

Connection pad

FG frame rear connection

	FG
A = vertical distance between connections	229
d1 = breaker depth with long rear connections	115
d2 = breaker depth with short rear connections	50
d3 = pole spacing	45
V (mm)	30
t (mm)	8
i3 (mm)	15
M (mm)	35
Ø hole max (mm)	13
Torque (Allen key in breaker) (Nm max.)	22
Torque of connection bolt M12 (Nm max).	42

FK frame rear connection

	FK
A - (mm) vertical distance between connections	273
M1 - (mm) additional breaker depth with Phase seperators	188
M2 - (mm) add. breaker depth with LONG rear connections	163
M3 - (mm) add. breaker depth with SHORT rear connections	98
d1 - (mm) breaker rear to out connection hole .. short connect.	85
d2 - (mm) breaker rear to out connection hole .. long connect.	150
d3 - (mm) breaker pole spacing	70
V - (mm) connection pad width	40
L - (mm) connection pad thickness	12
I3 - (mm) rear of connection pad to hole 1	32
I4 - (mm) center of hole 1 to hole 2	32
Ø - (mm) connection hole size (diameter)	14
torque (Allen key in breaker Nm. max.	14

Connections

Optional connection terminals

To allow for the different connection options in the different applications of the ***Record Plus™*** circuit breaker a large variety of different connection lugs, terminals and multiple connectors are available. These are available as a three or four pole set allowing for the configuration of one side of the breaker. The kits are made up of single pole connectors that are fitted to the standard breaker terminal. The connectors are supplied with all the necesssary connection and fixation hardware.

Extender
Extends the standard connection point to the exterior of the breaker body. ***Record Plus™*** extenders are normally used when the busbars and cables that are needed to connect the breaker exceed the possibilities of the standard connection facility or when the use of external box clamps is required.

FD frame & FE frame

The single pole connectors that are fitted to the standard terminal (FD frame top cavity of box clamp).
The connectors can be used with standard external box clamps, with or without phase barriers.(1)

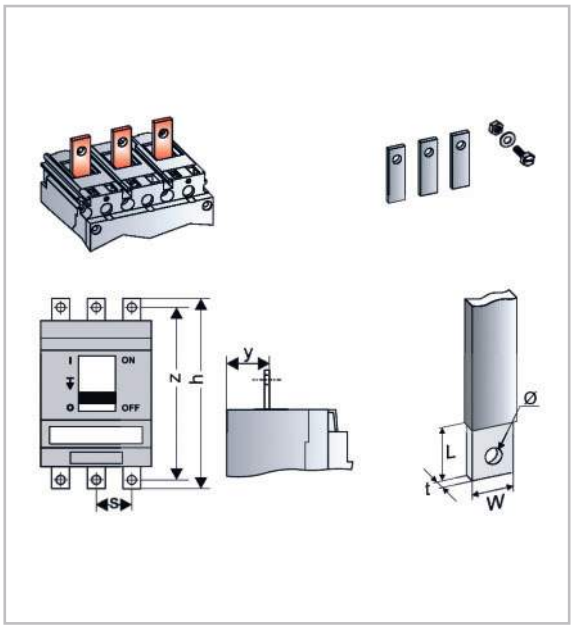

FG frame & FK frame

The single pole connectors that are fitted to the standard terminal.
The connectors can be used with standard external box clamps, with or without phase barriers.(1)

FD & FE extenders

	FD	FE
h = heigth dimension of breaker with extenders at its top AND bottom.	190	230
z (mm)	170	212
s (mm)	27	35
y max (mm)	28.5	25.5
W max (mm)	14	20
t max (mm)	5	8
L max (mm)	16	18
Ø hole max (mm)	7	9
Torque (Allen key in breaker) (Nm max.)	8	25
Torque of connection bolt (Nm max).	8	25

(1) Use is recommended

FG & FK extenders

	FG	FK
h = heigth dimension of breaker with extenders at its top AND bottom.	354	452
z (mm)	314	408
s (mm)	52.5	100
y max (mm)	29.5	56
W max (mm)	30	50
t max (mm)	12	20(10)(3)
L max (mm)	32	-
Ø hole max (mm)(2)	13	2 x 11
Torque (Allen key in breaker) (Nm max.)	42	M10-42
Torque of connection bolt (Nm max).	42	M10-42

(1) Use is recommended
(2) Two holes in each connection pad.
(3) 1600A, parallel 10mm bus.

Spreaders

Increase the pole spacing of the breaker they are used to extend the standard connection points to the exterior of the breaker body. ***Record Plus™*** spreaders are normally used when the busbars and cables that are needed to connect the breaker exceed the possibilities of the standard connection facility or when external lugs are needed. Available for:

FD frame & FE frame

The single pole connectors that are fitted to the standard terminal (FD frame top cavity of box clamp).
The connectors can be used with standard external lugs, with or without phase barriers.(1)

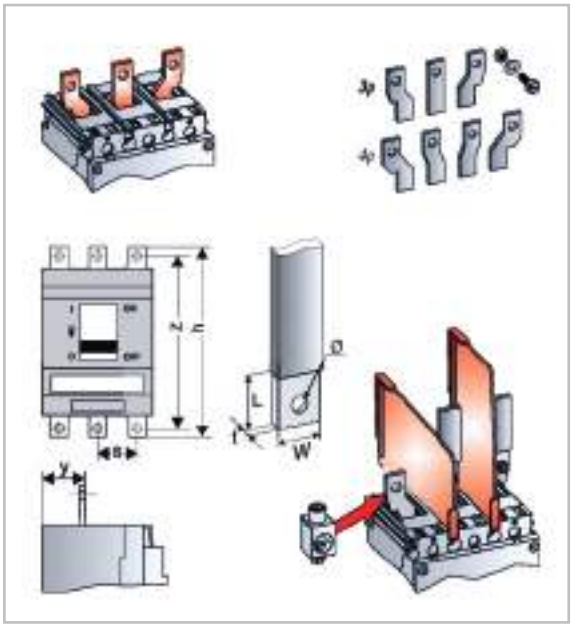

FG frame & FK frame

The single pole connectors that are fitted to the standard terminal.
The connectors can be used with standard external lugs, with or without phase barriers.(1)

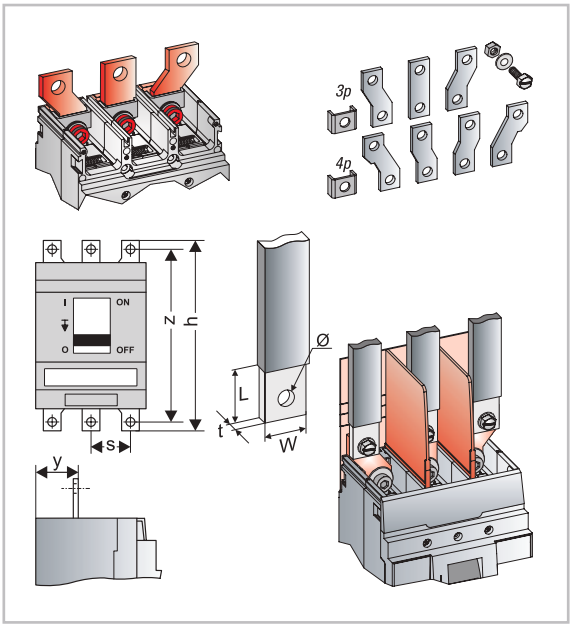

FD & FE spreaders

	FD	FE
h = heigth dimension of breaker with extenders at its top AND bottom.	190	230
z (mm)	170	212
s (mm)	27	35
y max (mm)	18.5	25.5
W max (mm)	14	18
t max (mm)	5	8
L max (mm)	16	18
Ø hole max (mm)	7	9
Torque (Allen key in breaker) (Nm max.)	8	25
Torque of connection bolt (Nm max).	8	25

(1) Use is recommended

FG & FK spreaders

	FG	FK
h = heigth dimension of breaker with extenders at its top AND bottom.	354	452
z (mm)	314	408
s (mm)	52.5	100
y max (mm)	29.5	56
W max (mm)	30	50
t max (mm)	12	20(10)(3)
L max (mm)	32	-
Ø hole max (mm)(2)	13	2 x 11
Torque (Allen key in breaker) (Nm max.)	42	M10-42
Torque of connection bolt (Nm max).	42	M10-42

(1) Use is recommended
(2) Two holes in each connection pad.
(3) 1600A, parallel 10mm bus.

Connections

Optional connection - box clamps

Record Plus™ breakers are designed to save space and time in mounting when compared to conventional switch gear. To achieve the same savings in the connecting process the ***Record Plus™*** line includes a series of lugs meeting the newest and highest standards in ease of connection and durability.
The terminals are suitable for conductors of copper and aluminium and meet both the newest version of the EN 60497 standards and the relevant UL486a and b regulations.

Internal box clamps
Fit onto the breaker without changing its profile or external dimensions. Available as a three or four pole set allowing the line or load side of the breaker to be equipped. The set consists of multi-pole units that displace the standard connection configuration. The sets can also be used on the plug-in / draw-out base and RCD units.
All clamps are suitable for copper and aluminium conductors.

FE frame (FE160 & FE250)

The set consists of basic 3 or 4 pole pole units that displace the standard connection configuration (FE frame nut plate). The internal box clamps are used in the same way on the plug-in / draw-out base and RCD units. All types can also be mounted to extenders, spreaders or rear connection pads.

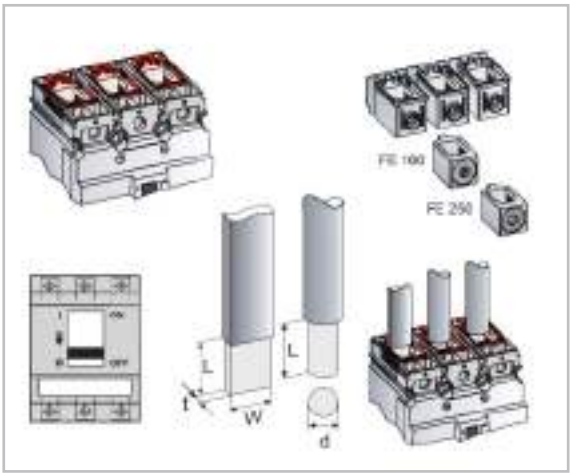

FE internal box clamps

	FE160	FE250
h = heigth dimension of breaker with box clamps mounted at top and bottom.	the same as breaker	
L max (mm)	18	18
d max (mm)	16	17.5(1)
S max (mm²)	2.5 - 95	16 - 150
L = distance to insulation (min.)	21	25
Torque (Allen key on clamp) (Nm max.)	30	30

(1) Most standard 185 mm² cable sections will also fit into this lug (hole diameter 17.5 mm)

FG frame & FK frame

The set consists of basic single pole units that displace are mounted above the standard connection pad (FG and FK frame). Each box terminal allows the connection of two to four cable cores per item. The internal lugs are used in the same way on the plug-in / draw-out base and RCD units. All types can also be mounted to extenders, spreaders or rear connection pads and can be used with or without phase barriers.

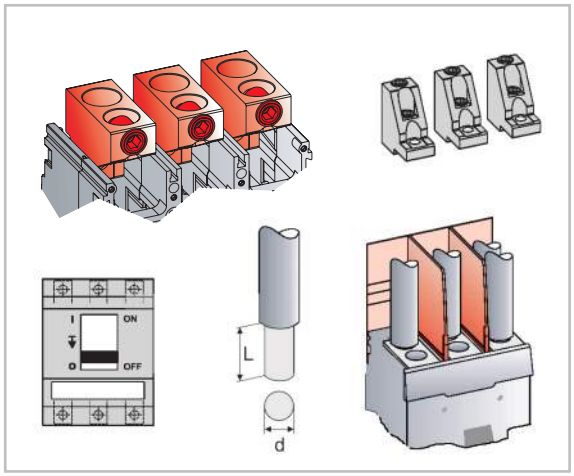

FG & FK internal box clamps

	FG	FK(2)	FK(3)
h = heigth dimension of breaker with box clamps mounted at top and bottom.	333	381	354
S max (mm²)	25 - 240 for L1 50 - 300 for L2	240	240
Hole L1 = distance to insulation L (min.)	22	-	-
Hole L2 = distance to insulation L (min.)	40	-	-
Distance to insulation L (min.)	-	27.5	36
Torque (Nm max.)	31(L_1) 42(L_2)	31	31

(2) Terminal for 3 cables
(3) Terminal for 4 cables

External box clamps

To accomodate for larger cross sections ***Record Plus™*** clamps can be used in combination with extenders and/or spreaders. They are available as a three or four pole set allowing the line or load side of the breaker to be equipped. Each set consists of basic single pole units with phase seperators.

FE frame distribution terminal

Specifically designed to allow the use of the ***Record Plus™*** FE frame as a mains device with cables distributing the load over multiple outgoing circuits (or lines of multiple outgoing circuits). The lugs are available as a three or four pole set allowing the line or load side of the breaker to be equipped. The sets consist of a number of fully isolated single pole units that can be assembled into a multipole distribution block before they are mounted on the breaker. Each lug allows for a maximum of four 6-25 mm^2 or two 10-35 mm^2 copper conductors.

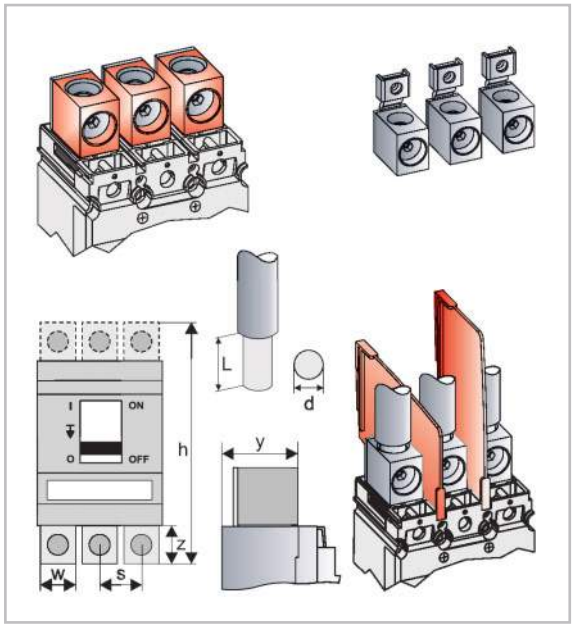

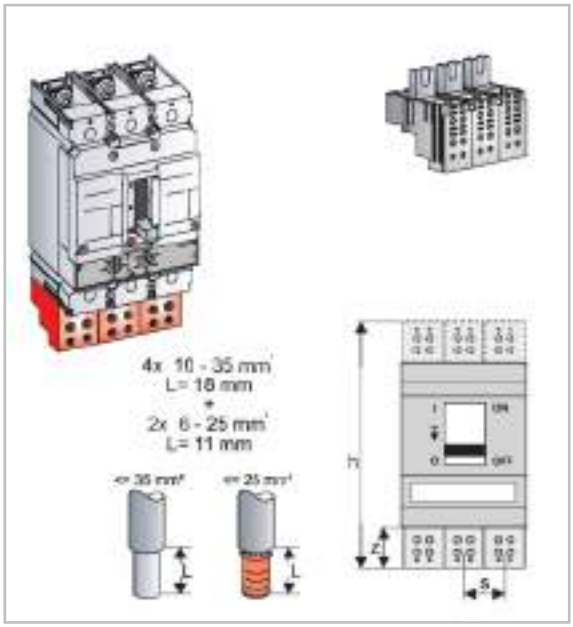

FD & FE external box clamps

	FD	FE
h = heigth dimension of breaker with box clamps mounted at top and bottom.	190	270
z (mm)	30	50
s (mm)	27	35
w (mm)	18.5	30
y (mm)	50	55.5
S max (mm^2)	4 - 95	70 - 185
L = distance to insulation (min.)	20	20
Torque (Allen key in breaker) (Nm max.)	8	25
Torque on connection bolt (Nm max.)	17	25

FE distribution terminal

	FE
h = heigth dimension of breaker with box clamps mounted at top and bottom.	250
z (mm)	60
s max (mm)	35
Torque (Allen key in breaker) (Nm max.)	25
L = distance to insulation (min.) - 35 mm^2	18
L = distance to insulation (min.) - 25 mm^2	11
Torque on connection bolt (Nm max.) - 35 mm^2	6
Torque on connection bolt (Nm max.) - 25 mm^2	3

Connections

Optional connection terminals - extender variants

The ***Record Plus™*** circuit breaker can be equiped with several variants of the standard extender design. These are available as a three or four pole set allowing for the configuration of one side of the breaker. The kits are made up of single pole connectors that are fitted to the standard breaker terminal. The connectors are supplied with all the necesssary connection and fixation hardware.

Extender twisted

The twisted version extends the standard connection point to the exterior of the breaker body and 'twists' the connection area from horizontal to vertical. It is normally used when the connecting busbars are turned 90 degrees and with ring terminals.

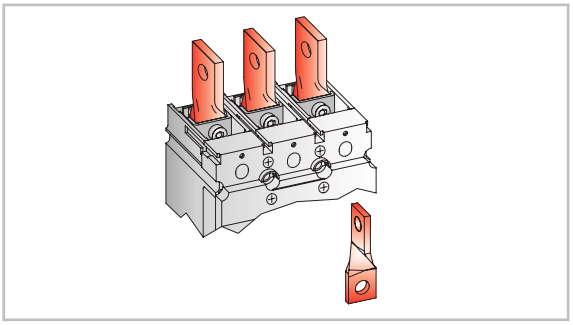

Twisted extenders

	FD	FE	FG
h = heigth dimension of breaker with extenders at its top AND bottom.	190	230	354
Ø hole max (mm)	7	9	13
Torque (Allen key in breaker) (Nm max.)	8	25	42

Extender heightened

Extends the standard connection points to the exterior of the breaker body and places them at different heights. ***Record Plus™*** extenders are normally used when the busbars and cables that are needed to connect the breaker exceed the possibilities of the standard connection facility, when external lugs are needed or to interconnect several breakers on the incoming side.

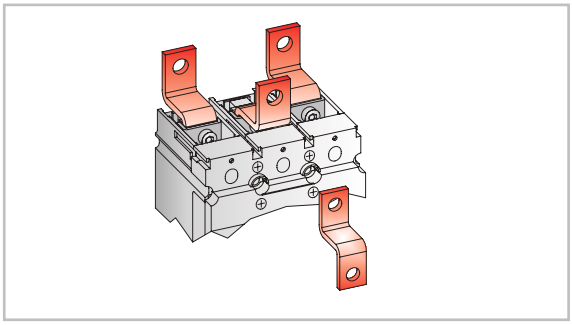

Heightened extenders

	FD	FE
h = heigth dimension of breaker with extenders at its top AND bottom.	190	230
Ø hole max (mm)	7	9
Torque (Allen key in breaker) (Nm max.)	8	25

Extender angled

Two more extender variants exist for the FE frame type only with a connection area set at forty five or ninety degrees. The hole dimensions and reqiuired torques are the same as those required for the heightened extenders.

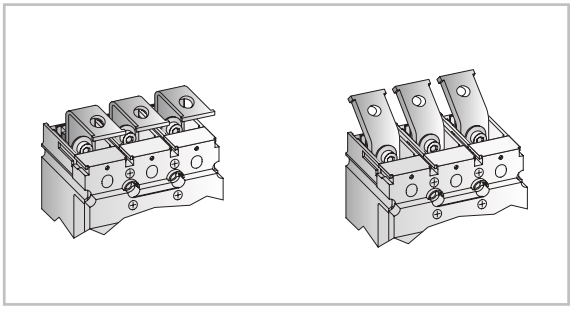

Phase separators and Back plates

Phase separators

Depending on the rated voltage and the type of connector, the use of phase separators is preferable and in some cases mandatory.
Record Plus™ phase seperators are simply slid into slots in the breaker housing. To allow for an easy installation of the connectors they are made of flexible material. They can be mounted in two ways, to allow for front and rear connection.
They ensure a correct dielectric separation of the different connection terminals.
For the ***Record Plus™*** FD, FE, FG and FK frame, phase separators are available in one set containing 12 pieces.

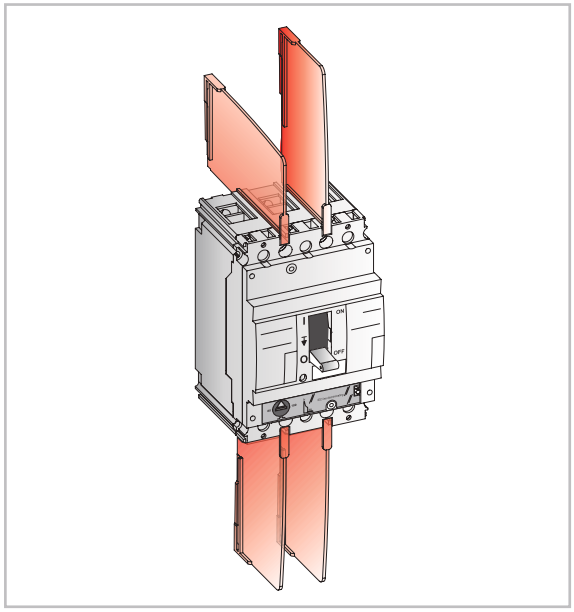

Back plates

Back plates are always used in association with phase separators. Normally used at voltages above 500V they prevent breaker venting from leading to dielectric issues. They also can be used when externally mounted connectors no longer meet the required clearance distances to a metal back plate.

A back plate suitable for 3 and 4 pole breakers is available. The required size is easily achieved by breaking off parts along a pre-cut line.

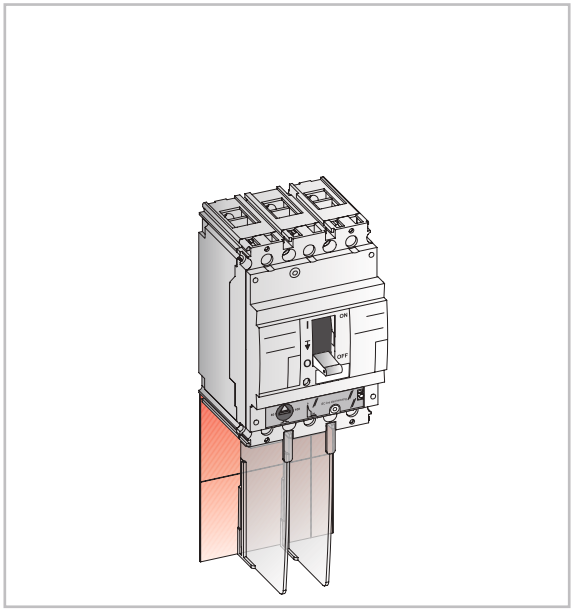

Just rel

D.2 Performance figures
D.4 Power dissipation
D.8 Derating at temperatures other than 40°C
D.10 Clearances (minimum safety distances)
D.11 Use in indivually mounted enclosures
D.12 Current limitation
D.14 Limitation curves (Energy & Current)
D.16 Environmental considerations
D.18 Use in DC networks
D.19 Use at frequencies other than 50/60 cycles

EN 60947-2 Standard

Circuit Breaker type		FD160		FD160						FE160		
Denomination		N	H	C	E	S	N	H	L	N	H	L
Poles	Number of	1		3,4			2[1],3,4			3,4		
Rated insulation voltage	Ui (Volts)	750		500	750	750	750			750		
Rated impulse withstand voltage	Uimp (Kilovolt)	3		6	8	8	8			8		
Rated operational voltage Ue	Volts AC	240		500	690	690	690			690		
	Volts DC	250		-	-	500	500			500		
Line Protection device												
Category of use		A		A			A			A		
Suitable for use as a isolator	Positive ON & OFF	yes		yes			yes			yes		
Rated current Ith = Ie	A at 40°C	160		160			160			160		
Ultimate breaking capacity Icu (kA)	230/240V AC	25	50	25	40	50	85	100	200	85	100	200
	400/415V AC	-	-	18	25	36	50	80	150	50	80	150
	440V AC	-	-	14	14	25	30	65	130[4]	42	65	130
	500V AC	-	-	10	12	18	22	36	50[4]	30	50	100
	690V AC	-	-	-	4,5	6	8	10	12	10	22	75
	250V DC Single pole	-	50	-	-	25	40	65	100	50	85	100
	500V DC Two Pole	-	-	-	-	25	40	65[2]	100[2]	50	85[2]	100[2]
Service breaking capacity Ics (%Icu)	≤ 500V	100%	100%	75%	75%	100%	100%	100%	100%	100%	100%	100%
	690V AC	-	-	-	-	50%	50%	50%	50%	100%	75%	25%
Making capacity Icm (kA peak)	400/415V AC	-	-	36	52,5	75	110	176	330	110	176	330
	500V AC	-	-	17	24	36	46	75	110	63	110	220
Single phase breaking capacity I_{IT} (kA)	230V AC	25	50	16	25	30	50	80	150	50	80	150
	400/415V AC	-	-	-	4,5	6	8	10	12	15	22	36
Endurance (CO operations)	Mechanical	10000		10000			25000			40000		
	Electrical at In	5000		5000			10000			20000		
	Electrical at In/2	10000		10000			20000			30000		
Endurance (On-Tripped operations)	Mechanical	4000		4000			10000			16000		
Trip Units	Interchangeable	no		no			no			yes		
	Thermal Magnetic line	LTM								LTM		
	Thermal Magnetic generator						GTM			GTM		
	Thermal Magnetic discriminating					LTMD				LTMD		
	Magnetic Only						Mag Break™			Mag Break™		
	Electronic discriminating									SMR1		
	Electronic enhanced											

NEMA AB-1 Standard

3 ph, Interruption rating	240V AC	-	-	-	-	50	65	100	-	100	150	200
	480V AC	-	-	-	-	25	36	50	-	50	65	130
	600V AC	-	-	-	-	6	8	10	-	25	36	42

EN 60947-3 Standard

Non Automatic Circuit Breaker/Switch type		FD160			FE160		
Denomination		Y - 63A		Y - 160A	Y		
Rated current In (class AC23)	220V AC to 690V AC	63		160	160		
Rated making capacity	Icm (kA peak)	1,7		2,8	4,2		
Short-term withstand current Icw (A)	Icw eff. 1 second	1,2		2	3		
	Icw eff. 3 seconds	1,2		2	3		

EN 60947-4 Standard

Use in motor circuits							
Rated current Ith	A at 65°C			125	150		
Endurance (CO operations)	Mechanical			25000	40000		
	Electrical at In class AC23			10000	20000		
	Operations per hour			120	120		
Protection	Short Circuit only (separate overload device)			Mag Break™	Mag Break™		
	Overload class 10 and Short circuit				SMR1		
	Max In (A) class 10			100	150		
	Max In (A) class 30			50	150		
	Earth fault unit (differential)			Optional FDQ type	Optional FEQ type		

Installation

Circuit Breaker or Switch type		FD160			FE160		
Number of poles		1	3	4	3		4
Mounting	On symmetrical DIN Rail	yes	yes	yes	no		no
	Fixed	yes	yes	yes	yes		yes
	Plug-in	no	yes	yes	yes		yes
	Draw-out	no	no	no	yes		yes
Connection	Front	yes	yes	yes	yes		yes
	Rear	yes	yes	yes	yes		yes
Dimensions (w x h x d) mm	Fixed front connection	27x130 x85	81x130 x85	108x130 x85	105x170 x95		140x265 x115
Weights (kg)	Fixed front connection	0,4	0,9	1,3	1,5		2

(1) N type only
(2) 3 poles are needed.
(3) 2 poles are needed
(4) The 160Amp current rating of the L type is limited to 65kA at 440v & 36kA at 500V.

	FE250			FG400			FG630			FK800			FK1250			FK1600	
V	N	H	L	N	H	L	N	H	L	N	H	L	N	H	L	N	H
	3,4			3,4			3,4			3,4			3,4			3,4	
690	750			750			750			1000			1000			1000	
8	8			8			8			8			8			8	
500	690			690			690			690			690			690	
250	500			500			500			500			500			500	
	A			B			B(5)			B			B			B	
	yes			yes			yes			yes			yes			yes	
	250			400			630			800			1250			1600	
65	85	100	200	90	100	200	85	100	200	85	100	170	85	100	170	85	100
36	50	80	150	50	80	150	50	80	150	50	80	100	50	80	100	50	80
25	42	65	130	42	65	130	42	65	130	42	50	80	42	50	80	42	50
18	30	50	100	30	50	100	30	50	100	36	42	50	36	42	50	36	42
-	10	15	22	10	22	75(7)	10	22	40(7)	20	25	30	20	25	30	20	25
25	50	85	100							50	80	100	50	80	100	-	-
-	50	85(2)	100(2)							36	50	65	36	50	65	-	-
100%	100%	100%	100%	100%	100%	100%	100%	100%	100%	100%	100%	100%	100%	100%	100%	100%	100%
-	100%	75%	50%	100%	75%	25%	100%	75%	50%	100%	100%	75%	100%	75%	50%	100%	75%
75	110	176	330	110	176	330	110	176	330	110	176	220	110	176	220	110	176
36	63	110	220	63	110	220	63	110	220	75	110	220	75,6	110	220	75	110
36	50	80	150	50	80	150	50	80	150	50	80	150	50	80	150	50	80
-	10	15	22	10	(6)	(6)	10	(6)	(6)	20	25	30	20	25	30	20	25
10000	25000			20000			20000			10000			10000			10000	
5000	10000			7500			5000			4000			3000			2000	
10000	20000			15000			10000			8000			6000			4000	
4000	10000			8000			8000			4000			3000			2000	
	yes			yes			yes			yes			yes			yes	
LTM										LTM			LTM				
	GTM																
	LTMD																
	Mag Break™			Mag Break™													
	SMR1			SMR1									SMR1e				
	SMR2			SMR2									SMR 1s & g				

65	**100**	**150**	**200**	**100**	**150**	**200**	**100**	**150**	**200**	**85**	-	-	**85**	-	-	**85**	-
36	**50**	**65**	**130**	**50**	**65**	**130**	**50**	**65**	**130**	**42**	-	-	**42**	-	-	**42**	-
22	**25**	**36**	**42**	**25**	**36**	**42**	**25**	**36**	**42**	**25**	-	-	**25**	-	-	**25**	-

	FE250			FG400			FG630			FK800			FK1250			FK1600	
	Y			Y			Y			Y			Y			Y	
	250			400			630			800			1250			1600	
	5,7			7,1			9,2			14,1			21,2			28,3	
	4			5			6,5			10			15			20	
	4			5			6,5			10			15			20	

	230			400			500			720			1000				
	25000			20000			20000			10000			10000				
	10000			7500			5000			4000			3000				
	120			120			60			60			60				
	Mag Break™			Mag Break™			Mag Break™			Mag Break™			Mag Break™				
	SMR1			SMR1 or SMR2			SMR1 or SMR2										
	225			400			500			720			1000				
	225			400			500			720			1000				
	Optional FEQ type			Optional FGQ type			Optional FGQ type										

	FE250			FG400			FG630			FK800			FK1250			FK1600	
	3		4	3		4	3		4	3		4	3		4	3	4
	no		no	no		no	no		no	no		no	no		no	no	no
	yes		yes	yes		yes	yes		yes	yes		yes	yes		yes	yes	yes
	yes		yes	yes		yes	yes		yes	yes		yes	yes		yes	yes	yes
	yes		yes	yes		yes	yes		yes	yes		yes	yes		yes	yes	yes
	yes		yes	yes		yes	yes		yes	yes		yes	yes		yes	yes	yes
	yes		yes	yes		yes	yes		yes	yes		yes	yes		yes	yes	yes
	105x170		140x265	140x265		185x265	140x265		185x265	210x320		280x320	210x320		280x320	210x320	280x320
	x95		x115	x115		x115	x115		x115	x160		x160	x160		x160	x160	x160
	1,5		2,0	4,5		6,0	4,5		6,0	12,2		15,1	18,0		23,4	18,0	23,4

(5) Limited to 500Amp
(6) Please contact your nearest GE Sales Office

(7) At a voltage of 690V the uses of a long widened Shield is mandatory (see page D.9)

Power dissipation

Standards

The standard for low voltage equipment is defined in the EN 60439-1, the EN 50298 and the IEC 60890. These provide a theoretical method to calculate the temperature rise within an enclosure. The main element in these calculations is the power dissipation of the equipment installed. By totalizing this value for all the installed devices, connections, cables and busbars it is possible to calculate the temperature rise within the enclosure. Here, for normal applications a temperature rise within the enclosure of 50 Kelvin is assumed.
The absolute value of this temperature may not exceed 70°C (the sum of the ambient temperature in Celsius and the temperature rise in Kelvin).

Use

An enclosure manufacturer can provide the exact data on the allowable power dissipation within a certain enclosure. The values depend on the enclosure type, the ventilation it offers and on where the components are located within this enclosure. The example here is based on the GE Modula 630 enclosure type. The table indicates the temperature rise within a certain enclosure dimension. This at the top and middle of the enclosure in function of the installed heat dissipation (products) in Watt.

Mounted on wall - Temperature rise (Kelvin)

DISSIPATION	500x500		500x750		750x500		750x750		750x1000		750x1250		1000x500		1000x750		1000x1000		1000x1250		1250x750		1250x1000	
(Watt)	Middle	Top	Middle	Top	Middle	Top	Middle	Top	Middle	Top	Middle	Top	Middle	Top	Middle	Top	Middle	Top	Middle	Top	Middle	Top	Middle	Top
10	4	5	4	4	4	5																		
20	8	9	7	7	6	8	5	6	4	5			5	7										
30	11	13																						
40	13	16	11	13	11	14	9	11	7	9	6	7	9	13	7	9	5	7	5	6	5	8		
50	16	19																						
60	19	22	16	18	16	19	12	16	10	12	8	10	12	18	10	13	7	10	6	8	8	11	6	8
70	21	25																						
80	23	28	20	23	20	24	15	20	12	16	10	12	16	22	12	16								
90	26	31																						
100	28	33	24	27	23	29	18	23	15	19	12	14	19	27	14	19	11	14	9	12	11	16	9	13
120	32	38	28	31	27	33	21	27					22	31	17	23								
140	37	44	31	35	31	38	24	31	19	24	15	19	25	35	19	26	15	19	12	16	15	21	12	16
160	41	48	35	39	34	42	27	34					27	39	21	28								
180	45	53	38	43	38	46	29	38	24	30	19	23	30	43	23	31	18	23	15	19	18	25	15	20
200	49	58	42	47	41	51	32	41					33	47	25	34								
220	53	63	45	51	44	55	34	44	28	35	22	27	35	50	27	37	21	27	18	23	21	30	18	24
240			48	55	47	58	37	47					38	54	29	39								
260			52	58	51	62	39	51	32	40	25	31	40	58	31	42	24	31	20	26	24	34	20	27
280							42	54					43	61	33	45								
300							44	57	36	45	28	35	45	65	35	47	27	35	23	29	27	38	23	30
350							50	64	40	51	32	40	51	73	40	53	30	39	26	33	31	43	25	34
400									45	57	36	44			44	59	34	44	29	37	34	48	28	38
450									49	62	39	48			48	65	37	48	32	40	38	53	31	42
500											43	53			53	71	40	53	34	44	41	58	34	46
550											46	57					44	57	37	47	45	63	37	49
600											49	61					47	61	40	51	48	67	39	53
650											53	65					50	65	42	54	51	72	42	57
700																			45	57			45	60
750																			48	61			47	63
800																			50	64			50	67

Record Plus™ Power dissipation

The power dissipation tables included here indicate the DC resistance of the ***Record Plus™*** breakers in cold condition.The power dissipation per pole can be calculated with this value and the average current flowing within the circuit (formula I^2R).

The tables indicate the Watt loss per pole based on the maximum current load of the breaker. To calculate the total Watt loss for a three or four pole breaker these values are multiplied by three.*

* for circuits with a high 3rd harmonic content, please contact us

Power Dissipation - FD160 frame ≤63A

		Thermal magn. type (LTM, LTMD, GTM)							Mag Break™ (MO)						Switch (Y)
	In (A)[1]	16	20	25	32	40	50	63	3	7	13	20	30	50	63
Fixed version	R in mΩ per pole	10.00	6.50	4.00	2.50	2.00	1.60	1.40	200.00	55.00	18.00	1.20	1.20	0.53	0.50
	Dissipation Watt single pole	2.56	2.60	2.50	2.56	3.20	4.00	5.56	1.80	2.70	2.81	0.48	1.08	1.33	1.98
	Dissipation Watt three poles	7.68	7.80	7.50	7.68	9.60	12.00	16.67	5.40	8.09	8.44	1.44	3.24	3.98	5.95
Plug-in version	R in mΩ per pole	10.07	6.57	4.07	2.57	2.07	1.67	1.47	200.07	55.07	18.07	1.27	1.27	0.60	0.57
	Dissipation Watt single pole	2.58	2.63	2.54	2.63	3.31	4.18	5.83	1.80	2.70	2.82	0.51	1.14	1.50	2.26
	Dissipation Watt three poles	7.73	7.88	7.63	7.90	9.94	12.53	17.50	5.40	8.10	8.47	1.52	3.43	4.50	6.79
Fixed version with RCD	R in mΩ per pole	10.08	6.58	4.08	2.58	2.08	1.68	1.48	200.08	55.08	18.08	1.28	1.28	0.61	0.58
	Dissipation Watt single pole	2.58	2.63	2.55	2.64	3.33	4.20	5.87	1.80	2.70	2.83	0.51	1.15	1.53	2.30
	Dissipation Watt three poles	7.74	7.90	7.65	7.93	9.98	12.60	17.62	5.40	8.10	8.48	1.54	3.46	4.58	6.91
Plug-in version with RCD	R in mΩ per pole	10.15	6.65	4.15	2.65	2.15	1.75	1.55	200.15	55.15	18.15	1.35	1.35	0.68	0.65
	Dissipation Watt single pole	2.60	2.66	2.59	2.71	3.44	4.38	6.15	1.80	2.70	2.84	0.54	1.22	1.70	2.58
	Dissipation Watt three poles	7.80	7.98	7.78	8.14	10.32	13.13	18.46	5.40	8.11	8.51	1.62	3.65	5.10	7.74

Power Dissipation - FD160 frame >63A

		Thermal magn. type (LTM, LTMD, GTM)						Mag Break™ (MO)			Switch (Y)
	In (A)			80	100	125	160		80	100	160
Fixed version	R in mΩ per pole			0.85	0.75	0.53	0.53		0.53	0.53	0.50
	Dissipation Watt single pole			5.44	7.50	8.28	13.57		3.39	5.30	12.80
	Dissipation Watt three poles			16.32	22.50	24.84	40.70		10.18	15.90	38.40
Plug-in version	R in mΩ per pole			0.92	0.82	0.60	0.60		0.60	0.60	0.57
	Dissipation Watt single pole			5.89	8.20	9.38	15.36		3.84	6.00	14.59
	Dissipation Watt three poles			17.66	24.60	28.13	46.08		11.52	18.00	43.78
Fixed version with RCD	R in mΩ per pole			0.93	0.83	0.61	0.61		0.61	0.61	0.58
	Dissipation Watt single pole			5.95	8.30	9.53	15.62		3.90	6.10	14.85
	Dissipation Watt three poles			17.86	24.90	28.59	46.85		11.71	18.30	44.54
Plug-in version with RCD	R in mΩ per pole			1.00	0.90	0.68	0.68		0.68	0.68	0.65
	Dissipation Watt single pole			6.40	9.00	10.63	17.41		4.35	6.80	16.64
	Dissipation Watt three poles			19.20	27.00	31.88	52.22		13.06	20.40	49.92

Power Dissipation - FE160 frame

		Thermal magn. type (LTMD, GTM)									Switch (Y)
	In (A)	25	32	40	50	63	80	100	125	160	160
Fixed version	R in mΩ per pole	6.30	2.80	2.80	2.10	1.45	1.20	0.81	0.77	0.63	0.40
	Dissipation Watt single pole	3.94	2.87	4.48	5.25	5.76	7.68	8.10	12.03	16.00	10.24
	Dissipation Watt three poles	11.81	8.60	13.44	15.75	17.27	23.04	24.30	36.09	48.00	30.72
Plug-in version	R in mΩ per pole	6.37	2.87	2.87	2.17	1.52	1.27	0.88	0.84	0.70	0.47
	Dissipation Watt single pole	3.98	2.94	4.59	5.43	6.03	8.13	8.80	13.13	17.79	12.03
	Dissipation Watt three poles	11.94	8.82	13.78	16.28	18.10	24.38	26.40	39.38	53.38	36.10
Fixed version with RCD	R in mΩ per pole	6.38	2.88	2.88	2.18	1.53	1.28	0.89	0.85	0.71	0.48
	Dissipation Watt single pole	3.99	2.95	4.61	5.45	6.07	8.19	8.90	13.28	18.05	12.29
	Dissipation Watt three poles	11.96	8.85	13.82	16.35	18.22	24.58	26.70	39.84	54.14	36.86
Plug-in version with RCD	R in mΩ per pole	6.45	2.95	2.95	2.25	1.60	1.35	0.96	0.92	0.78	0.55
	Dissipation Watt single pole	4.03	3.02	4.72	5.63	6.35	8.64	9.60	14.38	19.84	14.08
	Dissipation Watt three poles	12.09	9.06	14.16	16.88	19.05	25.92	28.80	43.13	59.52	42.24

		Mag Break™ (MO)										FE160 frame electronic type (SMR1)			
	In (A)[1]	3	7	13	20	30	50	80	100	125	160	25	63	125	160
Fixed version	R in mΩ per pole	410.00	110.00	13.30	13.20	3.60	1.70	0.60	0.60	0.40	0.40	0.40	0.40	0.40	0.40
	Dissipation Watt single pole	3.69	5.39	2.08	5.28	3.24	4.25	3.84	6.00	6.25	6.25	0.25	0.25	1.59	6.25
	Dissipation Watt three poles	11.07	16.17	6.23	15.84	9.72	12.75	11.52	18.00	18.75	18.75	0.75	0.75	4.76	18.75
Plug-in version	R in mΩ per pole	410.07	110.07	13.37	13.27	3.67	1.77	0.67	0.67	0.47	0.47	0.47	0.47	0.47	0.47
	Dissipation Watt single pole	3.69	5.39	2.09	5.31	3.30	4.43	4.29	6.70	7.34	7.34	0.29	0.29	1.87	7.34
	Dissipation Watt three poles	11.07	16.18	6.27	15.92	9.91	13.28	12.86	20.10	22.03	22.03	0.88	0.88	5.60	22.03
Fixed version with RCD	R in mΩ per pole	410.08	110.08	13.38	13.28	3.68	1.78	0.68	0.68	0.48	0.48	0.48	0.48	0.48	0.48
	Dissipation Watt single pole	3.69	5.39	2.09	5.31	3.31	4.45	4.35	6.80	7.50	7.50	0.30	0.30	1.91	7.50
	Dissipation Watt three poles	11.07	16.18	6.27	15.94	9.94	13.35	13.06	20.40	22.50	22.50	0.90	0.90	5.72	22.50
Plug-in version with RCD	R in mΩ per pole	410.15	110.15	13.45	13.35	3.75	1.85	0.75	0.75	0.55	0.55	0.55	0.55	0.55	0.55
	Dissipation Watt single pole	3.69	5.40	2.10	5.34	3.38	4.63	4.80	7.50	8.59	8.59	0.34	0.34	2.18	8.59
	Dissipation Watt three poles	11.07	16.19	6.30	16.02	10.13	13.88	14.40	22.50	25.78	25.78	1.03	1.03	6.55	25.78

(1) All 3A magnetic only ratings can be used at 3.5A

Power Dissipation - FE250 frame

		Thermal magn. type (LTMD, GTM)						Switch (Y)
	In (A)			125	160	200	250	250
Fixed version	R in mΩ per pole			0.67	0.53	0.40	0.33	0.30
	Dissipation Watt single pole			10.47	13.57	16.00	20.63	18.75
	Dissipation Watt three poles			31.41	40.70	48.00	61.88	56.25
Plug-in version	R in mΩ per pole			0.73	0.59	0.46	0.39	0.36
	Dissipation Watt single pole			11.41	15.10	18.40	24.38	22.50
	Dissipation Watt three poles			34.22	45.31	55.20	73.13	67.50
Fixed version with RCD	R in mΩ per pole			0.74	0.60	0.47	0.40	0.37
	Dissipation Watt single pole			11.56	15.36	18.80	25.00	23.13
	Dissipation Watt three poles			34.69	46.08	56.40	75.00	69.38
Plug-in version with RCD	R in mΩ per pole			0.80	0.66	0.53	0.46	0.43
	Dissipation Watt single pole			12.50	16.90	21.20	28.75	26.88
	Dissipation Watt three poles			37.50	50.69	63.60	86.25	80.63

		Mag Break™ (MO)			FE250 frame Electronic type (SMR1)		
	In (A)	160	200	250	125	160	250
Fixed version	R in mΩ per pole	0.33	0.33	0.33	0.30	0.30	0.30
	Dissipation Watt single pole	8.45	13.20	20.63	4.69	7.68	18.75
	Dissipation Watt three poles	25.34	39.60	61.88	14.06	23.04	56.25
Plug-in version	R in mΩ per pole	0.39	0.39	0.39	0.36	0.36	0.36
	Dissipation Watt single pole	9.98	15.60	24.38	5.63	9.22	22.50
	Dissipation Watt three poles	29.95	46.80	73.13	16.88	27.65	67.50
Fixed version with RCD	R in mΩ per pole	0.40	0.40	0.40	0.37	0.37	0.37
	Dissipation Watt single pole	10.24	16.00	25.00	5.78	9.47	23.13
	Dissipation Watt three poles	30.72	48.00	75.00	17.34	28.42	69.38
Plug-in version with RCD	R in mΩ per pole	0.46	0.46	0.46	0.43	0.43	0.43
	Dissipation Watt single pole	11.78	18.40	28.75	6.72	11.01	26.88
	Dissipation Watt three poles	35.33	55.20	86.25	20.16	33.02	80.63

Power Dissipation - FG400 & FG 630 frame

		FG400/630 frame electronic type (SMR1 & 2)				Mag Break™ (MO)		Switch (Y)	
	In (A)	250	400	500	630	400	500	400	630
Fixed version	R in mΩ per pole	0.11	0.11	0.10	0.10	0.11	0.10	0.11	0.10
	Dissipation Watt single pole	6.88	17.60	25.00	39.69	17.60	23.75	17.60	39.69
	Dissipation Watt three poles	20.63	52.80	75.00	119.07	52.80	71.25	52.80	119.07
Plug-in/Draw-out version	R in mΩ per pole	0.13	0.13	0.12	0.12	0.13	0.12	0.13	0.12
	Dissipation Watt single pole	8.13	20.80	30.00	47.63	20.80	30.00	20.80	47.63
	Dissipation Watt three poles	24.38	62.40	90.00	142.88	62.40	90.00	62.40	142.88
Fixed version with RCD	R in mΩ per pole	0.16	0.16	0.15	0.15	0.16	0.15	0.16	0.15
	Dissipation Watt single pole	10.00	25.60	37.50	59.54	25.60	37.50	25.60	59.54
	Dissipation Watt three poles	30.00	76.80	112.50	178.61	76.80	112.50	76.80	178.61
Plug-in/Draw-out version with RCD	R in mΩ per pole	0.17	0.17	0.17	0.17	0.17	0.17	0.17	0.17
	Dissipation Watt single pole	10.31	26.40	41.25	65.49	26.40	41.25	26.40	65.49
	Dissipation Watt three poles	30.94	79.20	123.75	196.47	79.20	123.75	79.20	196.47

Power Dissipation - FK800, FK1250 & FK1600 frame

		Thermal magn. type (LTM)				Mag Break™ (MO)		Switch (Y)		
	In (A)	630	800	1000	1250	800	1250	800	1250	1600
Fixed version	R in mΩ per pole	0.04	0.04	0.04	0.04	0.02	0.02	0.02	0.02	0.01
	Dissipation Watt single pole	15.88	25.60	35.00	54.69	12.80	23.44	12.80	31.25	25.60
	Dissipation Watt three poles	47.63	76.80	105.00	164.06	38.40	70.31	38.40	93.75	76.80
Draw-out version	R in mΩ per pole	0.07	0.07	0.07	0.07	0.05	0.05	0.05	0.05	0.04
	Dissipation Watt single pole	27.78	44.80	65.00	101.56	32.00	70.31	32.00	78.13	102.40
	Dissipation Watt three poles	83.35	134.40	195.00	304.69	96.00	210.94	96.00	234.38	307.20

		FK800, 1250-1600 frame electronic type (SMR1e, s & g)			
	In (A)	800	1000	1250	1600
Fixed version	R in mΩ per pole	0.04	0.04	0.04	0.03
	Dissipation Watt single pole	25.60	35.00	54.69	76.80
	Dissipation Watt three poles	76.80	105.00	164.06	230.40
Draw-out version	R in mΩ per pole	0.07	0.07	0.07	0.06
	Dissipation Watt single pole	25.60	35.00	54.69	76.80
	Dissipation Watt three poles	76.80	105.00	164.06	230.40

Notes

Derating

Thermal magnetic trip units

The ambient temperature in the direct vicinity of a protective device has an influence on its current carrying properties.

The ***Record Plus™*** breakers with thermal magnetic and magnetic only protection units as the MO, LTM and LTMD types can be used at currents and temperatures as indicated in the table.

Maximum permissable current at an ambient temperature of

		Fixed breaker							Plug-in or draw-out breaker						
Type	In (A)	40°C	45°C	50°C	55°C	60°C	65°C	70°C	40°C	45°C	50°C	55°C	60°C	65°C	70°C
FD160, FE160 & FE250	16	16.0	15.5	15.0	14.6	14.1	13.6	13.1	15.0	14.6	14.1	13.7	13.2	12.8	12.3
	25	25.0	24.3	23.5	22.8	22.0	21.3	20.5	23.5	22.8	22.1	21.4	20.7	20.0	19.3
	32	32.0	31.0	30.1	29.1	28.2	27.2	26.2	30.1	29.2	28.3	27.4	26.5	25.6	24.7
	40	40.0	38.8	37.6	36.4	35.2	34.0	32.8	37.6	36.5	35.3	34.2	33.1	32.0	30.8
	50	50.0	48.5	47.0	45.5	44.0	42.5	41.0	47.0	45.6	44.2	42.8	41.4	40.0	38.5
	63	63.0	61.1	59.2	57.3	55.4	53.6	51.7	59.2	57.4	55.7	53.9	52.1	50.3	48.6
	80	80.0	77.6	75.2	72.8	70.4	68.0	65.6	75.2	72.9	70.7	68.4	66.2	63.9	61.7
	100	100	97.0	94.0	91.0	88.0	85.0	82.0	94.0	91.2	88.4	85.5	82.7	79.9	77.1
FD160	125	125	121	118	114	110	106	103	118	114	110	107	103	100	96
	160	160	155	150	146	141	136	131							
FE160 & FE250	125	125	121	118	114	110	106	103	118	114	110	107	103	100	96
	160	160	155	150	146	141	136	131	150	146	141	137	132	128	123
	200	200	194	188	182	176	170	164	188	182	177	171	165	160	154
	250	250	243	235	228	220	213	205	235	228	221	214	207	200	193
FK800 & FK1250	630	630	611	592	573	554	536	517	630	611	563	545	527	509	491
	800	800	776	752	728	704	680	656	800	760	714	692	669	646	623
	1000	1000	970	940	910	880	850	820	1000	950	893	865	836	808	779
	1250	1250	1213	1175	1138	1100	1063	1025	1250	1188	1116	1081	1045	1009	974
FD63 & FD160 FE160 & FE250 with RCD	16	16.0	15.5	15.0	14.6	14.1	13.6	13.1	15.0	14.6	14.1	13.7	13.2	12.8	12.3
	25	25.0	24.3	23.5	22.8	22.0	21.3	20.5	23.5	22.8	22.1	21.4	20.7	20.0	19.3
	32	32.0	31.0	30.1	29.1	28.2	27.2	26.2	30.1	29.2	28.3	27.4	26.5	25.6	24.7
	40	40.0	38.8	37.6	36.4	35.2	34.0	32.8	37.6	36.5	35.3	34.2	33.1	32.0	30.8
	50	50.0	48.5	47.0	45.5	44.0	42.5	41.0	47.0	45.6	44.2	42.8	41.4	40.0	38.5
	63	63.0	61.1	59.2	57.3	55.4	53.6	51.7	59.2	57.4	55.7	53.9	52.1	50.3	48.6
	80	80.0	77.6	75.2	72.8	70.4	68.0	65.6	75.2	72.9	70.7	68.4	66.2	63.9	61.7
	100	100	97.0	94.0	91.0	88.0	85.0	82.0	94.0	91.2	88.4	85.5	82.7	79.9	77.1
FD160 with RCD	125	119	115	110	108	97	101	97	110	107	104	101	97	94	91
	160	152	147	141	138	125	129	125	141	137	133	129	124	120	116
FE160 & FE250 with RCD	125	125	121	118	114	110	106	103	118	114	110	107	103	100	96
	160	152	147	141	138	125	129	125	141	137	133	129	124	120	116
	200	190	184	177	173	156	162	156	177	171	166	161	156	150	145
	250	238	230	221	216	195	202	195	221	214	208	201	194	188	181

Derating

Electronic trip units

Electronic trip units are less sensitive to fluctuations in ambient temperature than thermal magnetic trip units. However, to prevent the device and its environment from exceeding their design values, certain limits must be taken into account. The table indicates the maximum values to which the LT or overload protection of the electronic trip unit of the ***Record Plus™*** breaker can be set. This at ambient temperatures from 40 to 70°C.

Maximum permissable current at an ambient temperature of

		Fixed breaker							Plug in or draw-out breaker						
Type	**Is[1](A)**	**40°C**	**45°C**	**50°C**	**55°C**	**60°C**	**65°C**	**70°C**	**40°C**	**45°C**	**50°C**	**55°C**	**60°C**	**65°C**	**70°C**
FE160	**25**	25	25	25	25	25	25	25	25	25	25	25	25	25	25
	63	63	63	63	63	63	63	63	63	63	63	63	63	63	63
	125	125	125	125	125	125	125	125	125	125	125	125	125	125	125
	160	160	160	160	156	152	148	144	160	156	152	148	144	140	136
FE250	**125**	125	125	125	125	125	125	125	125	125	125	125	125	125	125
	160	160	160	160	160	160	160	160	160	156	152	148	144	140	136
	250	250	250	250	244	238	231	225	250	244	238	231	225	219	213
FG400	**250**	250	250	250	250	250	250	250	250	250	250	250	250	250	250
	350	350	350	350	350	350	350	350	350	350	350	350	350	350	340
	400	400	400	400	390	380	370	360	400	390	380	370	360	350	340
FG630	**400**	400	400	400	400	400	400	400	400	400	400	400	400	400	400
	500	500	500	500	500	500	500	500	500	500	500	500	500	500	481
	630	630	614	599	583	567	551	536	583	568	554	539	524	510	481
FK800	**800**	800	800	760	760	760	680	-	760	741	722	703	722	646	-
FK1250	**1000**	1000	1000	950	950	900	850	-	950	950	903	879	855	808	-
	1250	1250	1250	1188	1188	1125	1000	-	1188	1158	1128	1098	1069	950	-
FK1600	**1600**	1600	1600	1520	1440	1408	1280	-	1600	1536	1444	1408	1368	1216	-
FE160 with RCD	**25**	25	25	25	25	25	25	25	25	25	25	25	25	25	25
	63	63	63	63	63	63	63	63	63	63	63	63	63	63	63
	125	125	125	125	125	125	125	125	125	125	125	125	125	125	106
	160	160	156	152	148	144	141	137	152	148	144	141	137	133	129
FE250 with RCD	**125**	125	125	125	125	125	125	125	125	125	125	125	125	125	125
	160	160	160	160	160	160	160	160	160	160	160	160	160	160	160
	250	250	244	238	244	238	231	225	238	232	226	220	214	208	202
FG400 with RCD	**250**	250	250	250	250	250	250	250							
	350	350	350	350	341	333	324	315							
	400	400	370	360	350	340	330	320							
FG630 with RCD	**400**	400	400	400	400	400	400	400							
	500	500	500	500	500	500	481	468							
	630	568	554	539	524	510	481	468							

(1) Is = Sensor rating

Clearances

Minimum distances

A modern circuit breaker is designed to interrupt high short-circuit currents in a very limited time frame. In doing so the breaker vents gas and and a limited amount of conductive fragments.

The ***Record Plus™*** circuit breaker has been designed to limit the venting phenomanae to a minimum. However, it is necessary to take the following minimum distances into account:

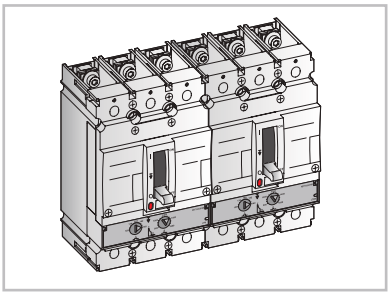

Minimum Distance between two side by side mounted ***Record Plus™*** Breakers = 0 mm

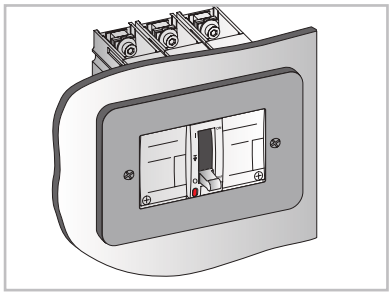

Minimum Distance to a front panel from a ***Record Plus™*** Breakers = 0 mm
Protection degree on breaker front = IP40

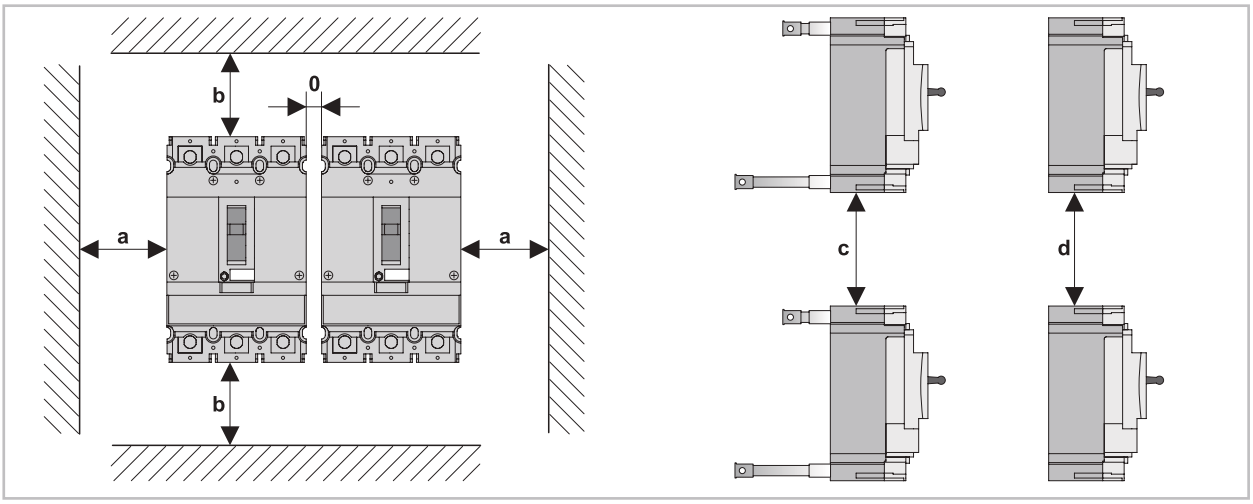

Minimum Distances

Type			Distances in mm a	b	c	d
FD160	To painted metal, non conductive materials and isolated conductors.		0	15		
	To unpainted metal	Voltage ≤ 480V	3	35		
		Voltage < 600V[1]	5	(2)		
		Voltage = 690V[1]	15	(2)		
	To breaker housing				35	35
	To conductors potruding from breaker				35	35
FE160 & FE250	To painted metal, non conductive materials and isolated conductors.		0	20		
	To unpainted metal	Voltage ≤ 480V	5	35		
		Voltage < 600V[1]	10	(2)		
		Voltage = 690V[1]	20	(2)		
	To breaker housing				35	35
	To conductors potruding from breaker				35	35
FG400 & FG630	To painted metal, non conductive materials and isolated conductors.		0	30		
	To unpainted metal	Voltage ≤ 480V	5	60		
		Voltage < 600V[1]	10	(2)		
		Voltage = 690V[3]	20	(2)		
	To breaker housing				60	60
	To conductors potruding from breaker				60	60
FK800, FK 800 & FK1600	To painted metal, non conductive materials and isolated conductors.		0	40		
	To unpainted metal	Voltage ≤ 480V	15	80		
		Voltage < 600V	20	80		
		Voltage = 690V	30	80		
	To breaker housing				140	140
	To conductors potruding from breaker				140	140

(1) The use of phase seperators and back plates is obligatory.
(2) Size determined by phase seperators.
(3) At 690Volts the FG400L & FG630L must have the power supply connected to the breaker ON side (Line). In this application the use of the widened terminal shield is compulsory.

Individual mounting of Record Plus™ in enclosures

Record Plus™ breakers can be placed in enclosures for use as individually wall mounted feeder units. In order to ensure a reliable and practical solution each of the combinations mentioned here have been defined by strenous testing. Here the properties of all components, and their use as a combination have been taken into account. For all other application of the ***Record Plus™*** in individually mounted enclosures, please contact us.

VMS, thermoplastic box IP65 with transparent cover.
The use of short or long terminal covers for the breaker is mandatory.

Breaker and terminal covers always have to be ordered separately.
Short-circuit rating: 20kA, 440V

VMS, thermoplastic housing IP65 with opaque cover

Record Plus Breaker[1] In (A)	Breaker type	Rotary handle type	Housing		
			Size	Type	Ref. nr.
125A	FD160 with and without RCD	FDNRC	440 x 320 x 254	VMS43 + extension frame	**855085**
160A	FE160	FENRC	440 x 320 x 254	VMS43 + extension frame	**855087**
160A	FE160 with RCD	FENRC	640 x 320 x 254	VMS63 + extension frame	**855088**
250A	FE250	FENRC	440 x 320 x 254	VMS43 + extension frame	**855087**
250A	FE250 with RCD	FENRC	640 x 320 x 254	VMS63 + extension frame	**855088**
400A	FG400 or FG 630	FGNRC	(2)	(2)	**(2)**
630A	FG400 or FG630 with RCD	FGNRC	(2)	(2)	**(2)**

PolySafe, glass fibre reinforced Polyester, cabinet IP65 with door.
When using ***Record Plus™*** Breaker in polyester cabinets for outdoor use we recommend encapsulating the breaker in a VMS box.
Breaker, terminal covers and mounting plate for the external housing have to be ordered separately.
Short-circuit rating: 20kA, 440V[3]

PolySafe, glass fibre reinforced polyester cabinet IP65

Record Plus Breaker[1] In (A)	Breaker type	Internal housing VMS		External housing Polysafe	
		Size	Ref. nr.	Size	Ref. nr.
125A	FD160 w/out RCD	440 x 320 x 254	**855085[3]**	750 x 500 x 320	**883008**
160A	FE160 w/out RCD	640 x 320 x 254	**855087 / 855088[3]**	750 x 500 x 320	**883008**
250A	FE250 w/out RCD	640 x 320 x 254	**855087 / 855088[3]**	750 x 500 x 320	**883008**
400A	FG400 or FG 630	FGNRC	**(2)**	(2)	**(2)**
630A	FG400 or FG630 with RCD	FGNRC	**(2)**	(2)	**(2)**

(1) Ambient temperature max. 30 degrees centigrade.
(2) Please contact us.
(3)The use of short or long terminal covers on the breaker is mandatory

Current limitation

A short-circuit is an overcurrent with a value only limited by the impedance of the fault circuit itself. This impedance is determined by a number of factors the main ones of which are the available power that a network can supply and the impedance of the conductors within the fault circuit.

In modern hi-power electrical distribution networks very high prospective fault levels of 100kA or more can occur. High prospective short-circuit current values can cause issues in a number of areas:

Electrodynamic forces
These are proportional to the square of the crest current value.
The electrodynamical forces due to the crest current value can seriously damage equipment as busbar systems and their supports, downstream switchgear etc.
Current limiting devices limit the crest value of the short-circuit current and thus reduce theses forces.

Magnetic fields
A high level short-circuit produces magnetic fields that prevent electrical equipment as meters and computers from operating correctly.

Thermal stress (heat)
Thermal stress is proportional to the square of the effective current value.
The thermal stress limit of cable isolation, busbar supports and other electrical equipment can be expressed as an A^2S value. This electrical energy value must be kept within certain pre-defined limits to prevent overheating.
To avoid or to limit the effects of these issues the use of current limiting devices is advisable.

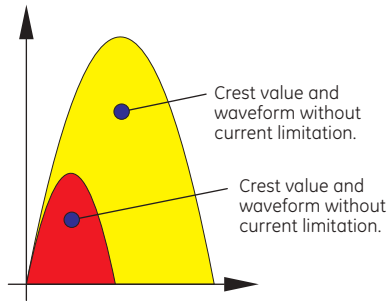

Effect of a current limiting device on a short-circuit in an AC network.

Thermal stress in Electrical conductors
Cable have thermal stress limits normaly expressed in a A^2S value that depend on the cable´s cross section and its isolation. They are limited to prevent the insulation conductor from exceeding their limit temperature.
Clause 434.5.2 of the IEC 60364 4d. 03 - 2008 defines that for protection devices interrupting within 0.1 seconds (t<=0.1 second) and current limiting devices as Record Plus, the following formula applies:

$$K^2 \times S^2$$

K: factor provided in the standard; depends on the material that the conductor is made of and it's insulation
S: cross section of the conductor

If the protection device is NOT current limiting.
Clause 434.5.2 of the IEC 60364 4d. 03 - 2008 applies.
Here for interruption times up to 5 seconds, the regulation requires that the following formula is met.

$$t = (K * S/I)^2$$

Terminology
t: Duration of the short-circuit in seconds.
K: Factor provided by the standard; depending on the material the conductor is made of and it's insulation.
S: Cross Section of the conductor.
I: Effective short-circuit current. (r.m.s value)

K factors in accordance with the IEC 60364-4-43 ed.03

Insulation & maximum temperature	Copper (Cu)	Aluminium (Al)
PVC - 70° < 300 sq.mm	115	76
PVC - 70° ≥ 300 sq.mm	103	68
PVC - 90° < 300 sq.mm	100	86
PVC - 90° ≥ 300 sq.mm	86	57
XLPE & EPR 90°	143	94
Rubber 60°	141	93
Mineral, bare unsheathed 105°	135 or 115(1)	-

(1) The 115 value is be used for conductors exposed to touch.

Maximum permissible thermal stress in conductors

Insulation	Core	Cross section in sq. mm & maximum permissible thermal stress in A^2s															
		1.5	2.5	4	6	10	16	25	35	50	70	95	120	150	185	240	300
		x10⁴	x10⁴	x10⁴	x10⁴	x10⁶	x10⁶	x10⁶	x10⁶	x10⁶	x10⁸	x10⁸	x10⁸	x10⁸	x10⁸	x10⁸	x10⁸
PVC - 70°	Cu	2.976	8.266	21.160	47.610	1.323	3.386	8.266	16.201	33.063	0.648	1.194	1.904	2.976	4.526	7.618	9.548
	Al	1.300	3.610	9.242	20.794	0.578	1.479	3.610	7.076	14.440	0.283	0.521	0.832	1.300	1.977	3.327	4.162
PVC - 90°	Cu	2.250	6.250	16.000	36.000	1.000	2.560	6.250	12.250	25.000	0.490	0.903	1.440	2.250	3.423	5.760	6.656
	Al	1.664	4.623	11.834	26.626	0.740	1.893	4.623	9.060	18.490	0.362	0.667	1.065	1.664	2.531	4.260	2.924
XLPE & EPR 90°	Cu	4.601	12.781	32.718	73.616	2.045	5.532	12.781	25.050	51.123	1.002	1.846	2.945	4.601	6.999	11.779	17.893
	Al	1.988	5.523	14.138	31.810	0.884	2.262	5.523	10.824	22.090	0.433	0.797	1.272	1.988	3.024	5.090	7.784
Rubber 60°	Cu	4.473	12.426	31.810	71.572	1.988	5.090	12.426	24.354	49.703	0.974	1.794	2.863	4.473	6.804	11.451	17.893
	Al	1.946	5.406	13.838	31.136	0.865	2.214	5.406	10.595	21.623	0.424	0.781	1.245	1.946	2.960	4.982	7.784
Mineral bare 105° k=135	Cu	4.101	11.391	29.160	65.610	1.823	4.666	11.391	22.326	45.563	0.893	1.645	2.624	4.101	6.238	10.498	16.403
Mineral bare 105° k=115	Cu	2.976	8.266	21.160	47.610	1.323	3.386	8.266	16.201	33.063	0.648	1.194	1.904	2.976	4.526	7.618	11.903

Record Plus™ MCCB's revolutionary design is equipped with dual contacts placed in a rotary configuration that enables the device to provide the highest available interruption ratings in the smallest possible size. When the breaker reacts it does so with more than twice the speed and force of conventional breakers, thus providing excellent current limitation. This results in low peak current and energy values in the circuit and leads to lower electro-dynamic forces and thermal stress values in the protected electrical conductors, downstream protection devices and equipment.

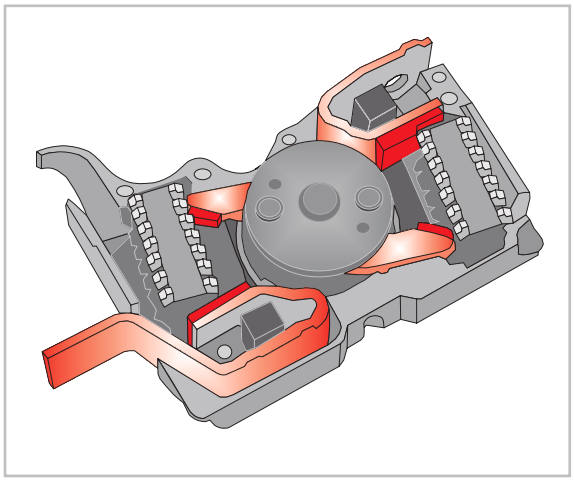

However, in some cases it is still necessary to check if the electrical conductors are protected correctly. This can be verified by taking the cable stress limits published on the previous page and comparing them with the let-through energy values found in the graphs. (page D.14 and D.15)

The limitation of electrodynamic forces and thermal stress by using back-up protection

Protection devices placed downstream from a protective device as a ***Record Plus™*** breaker must be able to withstand the thermal and electrodynamic effects that occur at its point of installation. Placing current limiting devices upstream limits these values and can allow the use of smaller and more economical devices than is possible without the use of current limitation.

Back-up protection with ***Record Plus™*** is described in the application data section of this catalogue. (page E.20)

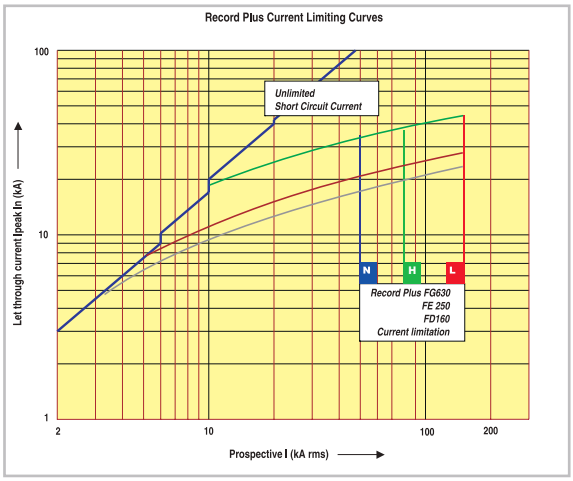

Current limitation data at 400/415V

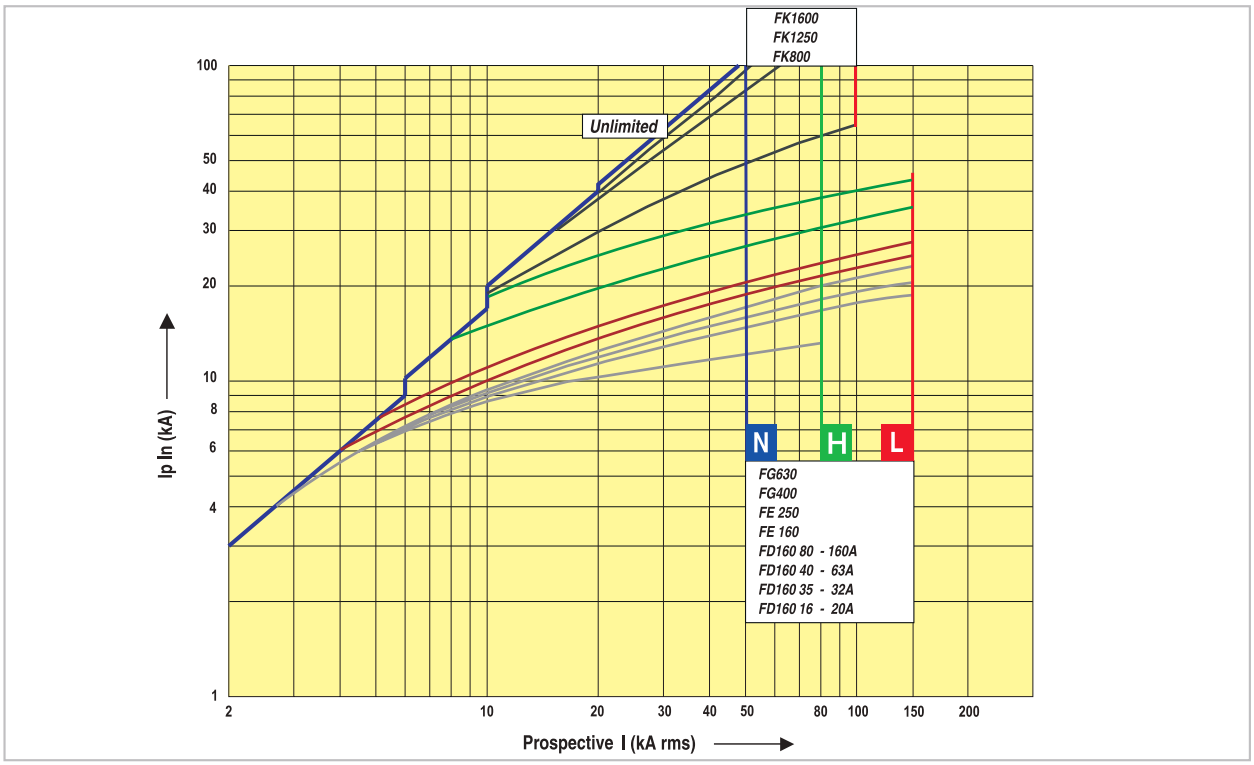

Thermal stress (Energy) Limitation data at 400/415V

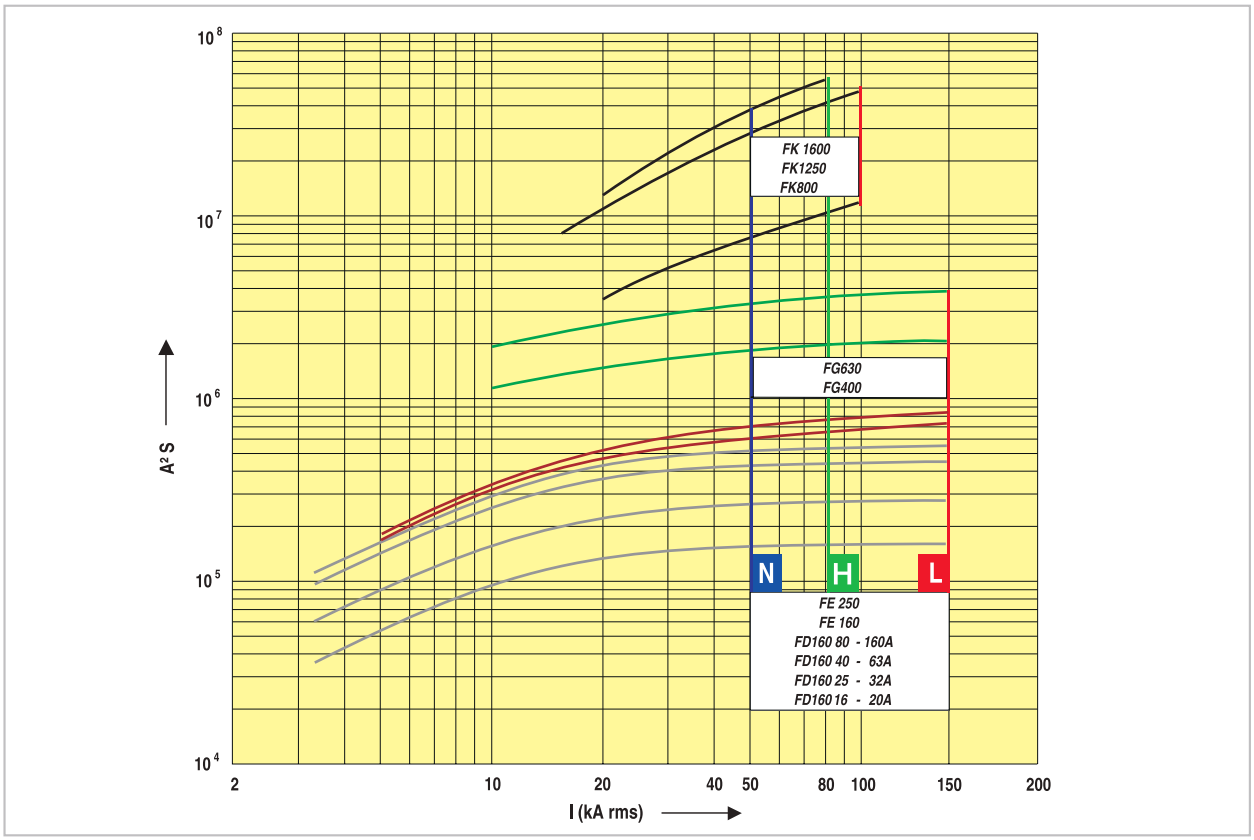

Current limitation data at 690V

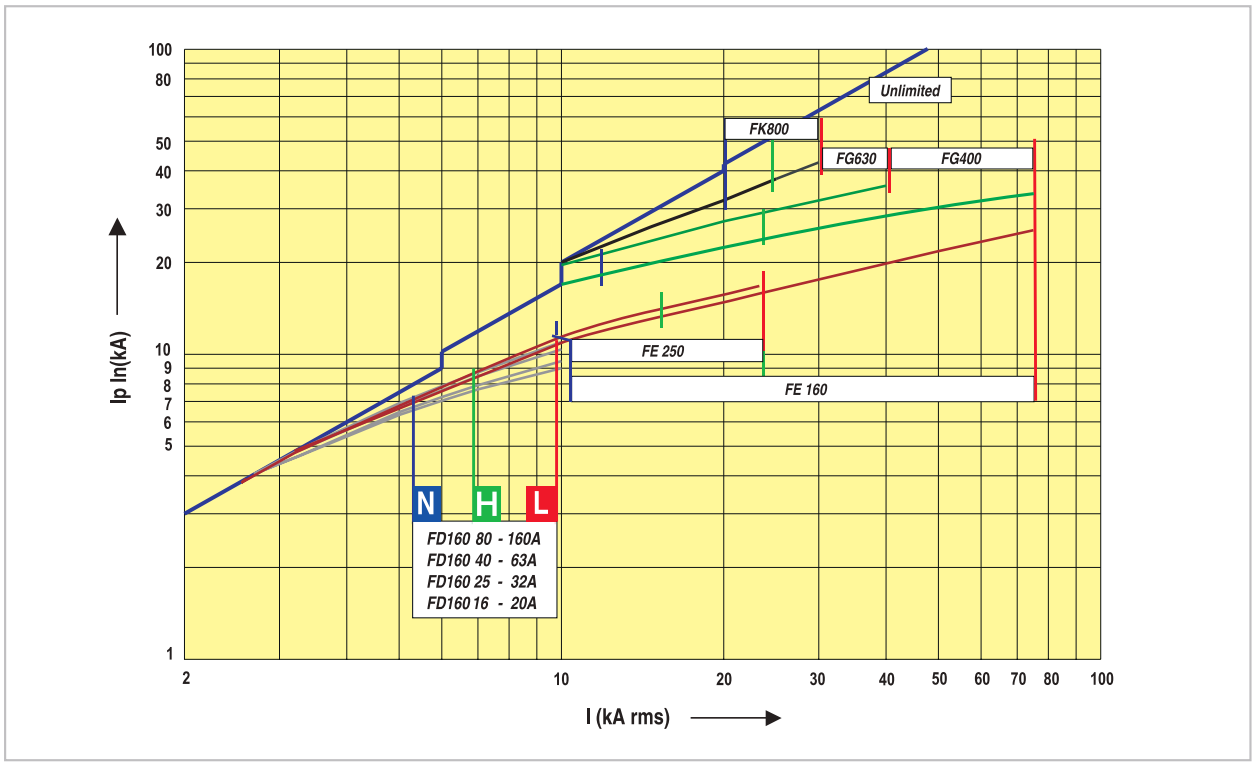

Thermal stress (Energy) Limitation data at 690V

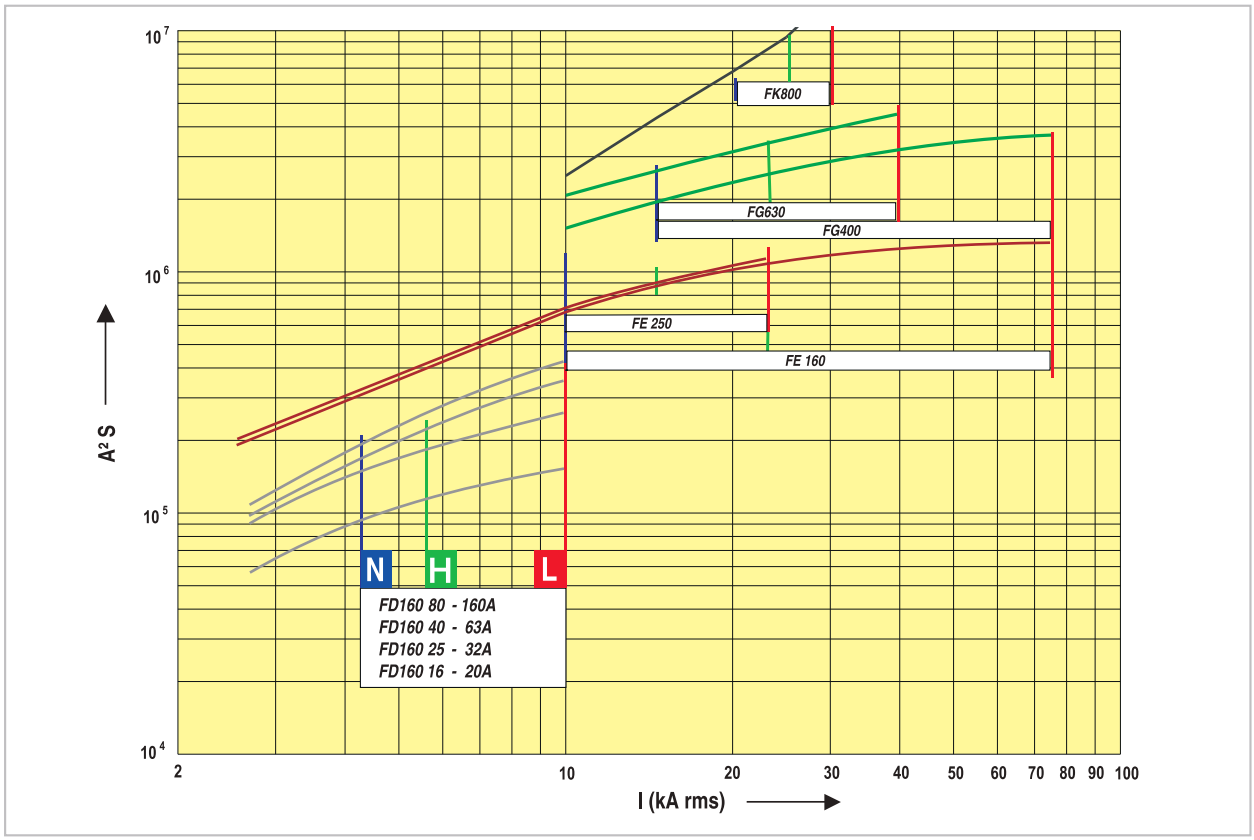

Environmental considerations

Ambient temperature

Record Plus™ breakers are designed to operate normally at temperatures of -20 degrees to +70°C. Above 40°C derating factors must be applied for two basic reasons:
- To prevent the materials used to construct the device from reaching temperatures that have an adverse effect on their mechanical and/or electrical properties.
- When the breakers is equipped with a thermal magnetic protection device the bimetal in the device will react to the heat generated by the current flowing through the device.Typical for this kind of device is that its reaction time speeds up at higher ambient temperatures.

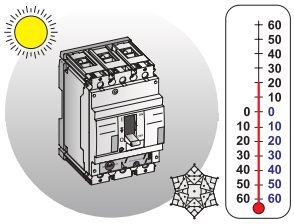

To achieve the same reaction time on a set current value it becomes necessary to derate.
The time current curves published in this catalogue are always valid for operating temperatures between 10 and 40°C.

Storage temperature

A ***Record Plus™*** breaker is able to withstand non-operational storage temperature ranges of -40 to +85°C.

Influence of altitude

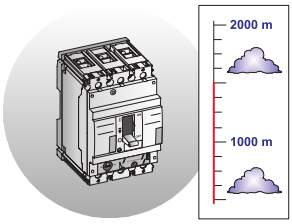

Up to altitudes of 2000 m above sea level no derating of breaker current or rated voltage is apllicable. For altitudes above 2000 m the following factors apply:

Altitude

Altitude (meters)	3000m	4000m	5000m
Ue max. (Volts)	550V	480V	420V
Max. Thermal current at 40°C	0.98 x In	0.93 x In	0.9 x In

Other atmospheric conditions

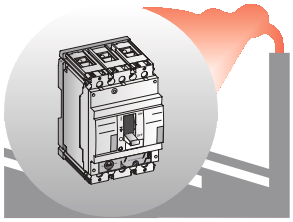

The breaker is designed to operate at the temperatures and relative humidities defined in the EN 60947 clause 6.1.3.1. It also meets the following standards:

IEC 68-2-1	Cold
IEC 68-2-2	Dry heat
IEC 68-2-11	Salt
IEC 68-2-14	Change of temperature
IEC 68-2-27	Shock test
IEC 68-2-29	Bump
IEC 68-2-30	Damp heat cyclic
IEC 68-2-31	Drop
MIL810F	Humidity

Shock & vibration

The ***Record Plus™*** line has been designed to withstand shock and vibration to the following standards:
IEC 68-2-6
Lloyd's Register of Shippping
Bureau Veritas
JIS 8370
More specifically: ***Record Plus™*** passed the following electro-mechanical tests:

Functions normally while being subjected to 30 minutes of random vibration with a power spectral density of 0.29g^2/Hz in the range of 5Hz to 500Hz (3dB corner points, ±20dB/decade rolloff), this over three axes.

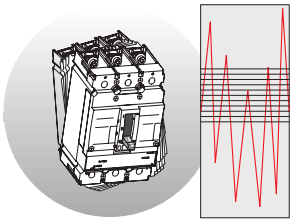

Functions normally while being subjected to sinusoidal vibration of 5g Peak from 10Hz to 500Hz using 30 minute sweeps with additional 30 minute dwells at the three greatest resonance points in this frequency range, this over three axes.

The product is shock resisitant and can withstand the following impacts in any possible orientation:
20g, 6ms, 10g, 11ms

Electromagnetic compatibility

Meets the most stringent requirement of the EN 60947-2 and IEC 1000-4. The breaker and electronic trip unit have passed the following tests.

Harmonics, current dips, interruptions and power frequency variations.
EN 60947-2 Annex F, Sub-clause F4.1 through 3
All requirements of non-sinusoidal currents resulting from harmonics are met i.e:

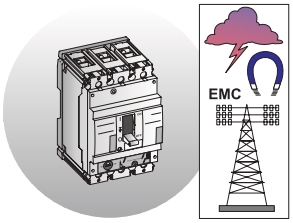

- Wave form consisting of a fundamental component + 3rd harmonic component at 50 and 60Hz
- Wave form consisting of a fundamental component + a 5th harmonic component at 50 and 60Hz
- Composite wave form with a fundumental component + 3rd, 5th & 7th and a harmonic at 50 and 60Hz
- All current dips and current interruptions are met.
- Frequency variation test from 45Hz to 65Hz in 1Hz steps (required 50Hz to 60Hz in 1Hz steps)

Electrostatic discharge
EN 70947 Annex F, Sub-clause F6 and the IEC 1000-4-2 (basic standard)
- Passed level 4 air discharge 15kV

Radiated, radio frequency, electromagnetic field immunity test
EN 60947-2 Annex F, Sub-clause F7 and the IEC 1000-4-3 (basic standard)
- Passed higher than level 4.....field strength 30V/m

Electrical fast transient/burst
EN 60947-2 Annex F, Sub-clause F5 and the IEC 1000-4-4 (basic standard)
- Passed level 4 burst peak voltage 4kV

Surge immunity test
EN 60947-2 Annex F, Sub-clause F5 and the IEC 1000-4-5 (basic standard)
- Passed level 4 Voltage 1.2µs/50µs 6kV; current 8µs/20µs 3kA

Dry heat test
EN 60947-2 Annex F, Sub-clause F8
- Passed all test requirements

Thermal shock test
EN 60947-2 Annex F, Sub-clause F9
- No nuisance tripping within the 28-day temperature cycles

Use in DC networks

In both AC and DC networks protective devices are required to interrupt the prospective short-circuit current at the point where the device is installed. For circuit breakers as the ***Record Plus***™ this value is called the interuption or breaking capacity (Icu or Ics), a value dependent not only on the prospective fault current value but also on the system voltage rating. For DC networks the situation is basically the same as for AC networks.

However, the system voltage generally plays a greater role (is more difficult to interrupt) while the network defines how many poles need to participate in the interruption.
The drawing below indicates the three possible DC networks with the "worst" short-circuit for each of them, the number of poles that must particpate in the breaking operation and the voltage level that needs to be interrupted.

Use in DC networks

Network Type	Center point connected to earth (A)	One pole connected to earth (B)	Insulated from earth (C)(1)
Electrical schemes	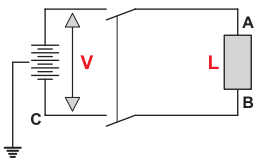	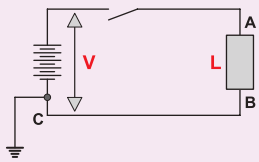	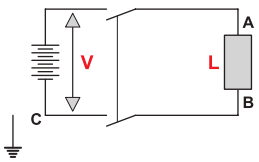
Maximum short-circuit current (Icc max)	short-circuit A-B	short-circuit A-B or A-C	short-circuit A-B
Minimum poles needed	2 (one on each polarity)	1 (unearthed polarity)	2 (one on each pole)
Breaking capacity on each pole	Icc max at V/2	Icc max at V	Icc max at V

(1) When a pole is grounded due to a first fault nothing happens, on a second fault the network behaves like a system with "one polarity connected to ground"

Record Plus™ FD, FE, FG and FK line breakers can be used in DC networks with standard thermal magnetic trip units.
For ***Record Plus***™ FG line breakers, please contact us.
The nominal current rating of the device does not vary in AC or DC applications. The setting of the short-circuit or magnetic device needs to be multiplied by 1.2 to determine its threshold in a DC network.
The table indicates the nominal current, the breaking capacity (Icu=Ics) and the number of poles needed to participate in the interruption.

Example
Rated voltage 500V DC; Rated current 200A Icc max 50kA
network A: center point connected to grond
FE250N 3x 250 - 1pole for each polarity
network B: one pole connected to ground
FE250N 3x 250 - 2poles on unearthed polarity.
network C: insulated network
FE250N 3 x 250 - 1 pole on each polarity

Use in DC networks with standard thermal magnetic trip units

Breaker	Rated current	110V DC	250V DC	440V DC	500V DC	Thermal threshold	Magnetic threshold
FD160S	16÷160	25 (1p)	25 (1p)	25 (3p)	-	= AC	1.2
FD160N	16÷160	40 (1p)	40 (1p)	40 (2p)	40 (2p)	= AC	1.2
FD160H	16÷160	65 (1p)	65 (1p)	65 (2p)	65 (3p)	= AC	1.2
FD160L	16÷160	100 (1p)	100 (1p)	100 (3p)	100 (3p)	= AC	1.2
FE160N	25÷160	50 (1p)	50 (1p)	50 (2p)	50 (2p)	= AC	1.2
FE160H	25÷160	85 (1p)	85 (1p)	85 (2p)	85 (3p)	= AC	1.2
FE160L	25÷160	100 (1p)	100 (1p)	100 (3p)	100 (3p)	= AC	1.2
FE250V	125÷250	25 (1p)	25 (1p)	25 (2p)	-	= AC	1.2
FE250N	125÷250	50 (1p)	50 (1p)	50 (2p)	50 (2p)	= AC	1.2
FE250H	125÷250	85 (1p)	85 (1p)	85 (2p)	85 (3p)	= AC	1.2
FE250L	125÷250	100 (1p)	100 (1p)	100 (3p)	100 (3p)	= AC	1.2
FG400N							
FG400H							
FG400L							
FK800N	500÷800	50 (1p)	50 (2p)	36 (3p)	36 (3p)	= AC	1.2
FK800H	500÷800	60 (1p)	60 (2p)	60 (3p)	60 (3p)	= AC	1.2
FK800L	500÷800	80 (1p)	80 (2p)	80 (3p)	80 (3p)	= AC	1.2
FK1250N	640÷1250	50 (1p)	50 (2p)	36 (3p)	36 (3p)	= AC	1.2
FK1250N	640÷1250	60 (1p)	60 (2p)	60 (3p)	60 (3p)	= AC	1.2
FK1250L	640÷1250	80 (1p)	80 (2p)	80 (3p)	80 (3p)	= AC	1.2

Use at frequencies other than 50/60 cycles

Performance characteristics of protective devices used in electrical distribution networks or systems vary according to the network's rated frequency.
The ***Record Plus™*** family of circuit breakers is designed to offer their best performance at 50/60 Hz network.

The breakers can be used at 16 2/3 (applications in rail transport) and 400hz (aviation) if the following is taken into account:
a) The rated breaking capacity is decreased (1)
b) The device trip unit settings are modified
Here the correct setting of the trip unit is vital to ensure that the circuit breaker performs well in the electrical distribution network.

Thermal magnetic trip units

Record Plus™ breakers and their trip units can be used at 16 2/3 Hz and 400 Hz provided that the trip units are set accordingly.The table indicates the coefficients to be applied for 16 2/3 Hz and 400 Hz applications.

Kt (for thermal)
Km (for magnetic)

The current values for each environment can be calculated by multiplying the values set on the breaker by the coefiicients mentioned in the tables.

Electronic (SMR1) trip units

The breakers and their trip units can be used at 400 Hz (aircraft) provided that the trip units are set accordingly.
The table indicates the coefficients to be applied for 16 2/3 Hz and 400 Hz applications.

Kt (for LT)
Km (for ST)

The current values for each environment can be calculated by multiplying the values set on the breaker by the coefiicients mentioned in the tables.

Use in networks with a frequency of 16 2/3 and 400 cycles

Breaker	Rated current	Trip Unit type	Thermal or LT settings		Magnetic or ST settings	
			Kt_{16} (16 2/3Hz)	Kt_{400} (400 Hz)	Km_{16} (16 2/3Hz)	Km_{400} (400 Hz)
FD160N, H or L	3÷160	**LTMD, GTM or MO**	1	0.9	0.8	1.6
FE160N, H or L	8÷63	**LTM, LTMD, GTM or MO**	1	0.95	0.8	1.6
FE160N, H or L	64÷160	**LTM, LTMD, GTM or MO**	1	0.9	0.8	1.6
FE250N, H or L	80÷250	**LTMD, GTM or MO**	1	0.9	0.8	1.6
FE160N, H or L	10÷125	**SMR1**	1	1	1	1
FE160N, H or L	160	**SMR1**	1	0.9	1	1
FE250N, H or L	40÷125	**SMR1**	1	1	1	1
FE250N, H or L	64÷250	**SMR1**	1	0.9	1	1
FG400N, H or L	100÷400	**SMR1**	1	0.8	1	1
FG630N, H or L	160÷630	**SMR1**	1	0.8	1	1
FK800N, H or L	320÷800	**LTM**	1	0.6	1	1
FK1250N, H or L	400÷1250	**LTM**	1	0.6	1	1

Example
A FE160N with LTMD 160A trip unit in a 400 Hz network:
(from the table Kt_{400} = 0.9 / Km_{400} = 1.6)

If Ir is set at 160A and Im set at 1200A the real thermal threshold is 160 x 0.9 = 144A at 40°
Thus the current in the circuit may not exceed this value Im = 1200 ≥
the real magnetic threshold is 1120 x 1.6 = 1920A

(1) Please consult us.

Just rel

E.2 Introduction
E.4 Protection against short-circuit
E.8 Personnel protection (direct and indirect contact)
E.16 Selectivity/Discrimination
E.22 Back-up protection
E.25 Selectivity Plus
E.29 Coordination with loadbreak disconnect switches
E.30 Protection of motor circuits (coordination type 2)
E.38 Protection of LV/LV transformer
E.39 Protection of capacitor banks

Introduction

A protection device like the ***Record Plus™*** circuit breaker is used in a wide variety of environments to protect conductors, equipment and devices in low voltage distribution circuits. To use this product to its full potential it is necessary to verify that it functions correctly in the environment in which it is used and that it meets the Electrotechnical requirements of the circuit it protects.

Environment

Record Plus™ breakers function well in almost any industrial environment. The IEC 60947 defines the main aspects of what is meant by "industrial environment":

Temperature:
Relative humidity:
Altitude:
Pollution:
Network harmonic content:
Shock and vibration resistance:

For conditions other than the above mentioned please refer to page D.16 in which the effects of the environment are defined.

Maximum short-circuit current

Protective devices as the ***Record Plus™*** circuit breaker must be able to interrupt the maximum short-circuit current at the point where they are installed.
The interruption ratings or breaking capacities of these breakers can be found in section D of this catalogue.
The short-circuit ratings at the point of installation of these devices can be determined by the use of software as Procera plus. A method to calculate these values conventionally is described on page E.4 and E.5 of this catalogue.

Design current of a circuit

The equipment and devices in an electrical circuit determines it's current load. The electrical conductor cross sections that can be used in the circuit are determined by a number of factors i.e.

- The design current of the circuit (I_B).
- Conductor type and it's insulation. (current capacity = I_Z)
- Installation method.
- Temperature.
- Number of conductors mounted in each others vicinity.

The resulting combinations of current load and electrical conductor cross sections are beyond the scope of this catalogue, however a number of frequently used values are:

Conductor cross section	10mm²	25mm²	50mm²	70mm²	95mm²
I_B with Cu conductors in A	50	90	130	170	210
I_B with AL conductors in A	35	70	100	130	160

(1) In certain specific cases deviations are allowed.

Phase and Neutral conductors

Clause 431.1[(1)] of the IEC 60364 states that overcurrent detection and disconnection shall be provided for all live conductors.
In TN & TT systems no neutral overcurrent protection is required if the neutral cross section is at least equivelant to that of the line conductors and the current is not expected to exceed that in the line conductors.
However, if this condition is not met a neutral current detection device is required that disconnects the line protection devices on the detection of a fault.
For IT systems where the neutral is distributed (NOT recommended) each circuit shall be provided with a line and neutral overcurrent protection and disconnection device.[(1)]

Harmonic currents

Clause 431.2.3 of the IEC 60364 requires that if the harmonic content of the line currents is such that a current in the neutral is expected that exceeds the neutrals current carrying capacity, overcurrent detection is required. The detection shall be compatible with the nature of the current in the neutral and shall cause disconnection of the line conductors.

Breaker parameters

Record Plus™ breakers are available equipped with 3 or 4 pole overload detection, protection and interruption devices. Multiple Neutral protection modes being available. In 4 pole devices the neutral pole always operates simultaneously with those present in the phases.

Each breaker has a minimum of two protection devices:
- Overload Protection Device.
  (In electronic devices - LT setting)
- Short Circuit Protection Device.
  (In electronic devices - ST or I setting)

Electronic Trip Units have extended protection features including:
- LT or Overload Protection device.
- ST or Time delayed Short Circuit Protection device.
- I or Instantaneous Short Circuit Protection device.

Optionally
- Gfsum. or Residual current operated protection device

All ***Record Plus™*** breakers can be equipped with a externally linked Residual Current device.

Overload or LT setting

Referred to as Ir in the IEC 60364 the setting is determined by the use of two following formulae.

$$I_B < Ir \leq I_Z$$
$$It \leq 1.45 \times I_Z$$

Terminology

I_B = Circuit design current
Ir = Current set on breaker
I_Z = Current carrying capacity of electrical conductor
I_t = Tripping current of the protection device
(***Record Plus™*** MCCB $I_t \leq 1.3 \times Ir$)

Use of the above mentioned formulae and the ***Record Plus™*** characteristics give the following results:
Breaker setting $Ir \leq I_Z$ ($I_t \leq 1.3 \times I_Z$)
In practice **Ir** is generally set at a value equal to I_Z.

Magnetic setting (Im) or ST setting
Protected Equipment
The magnetic or ST setting of a breaker (Im) is primarily defined by the characteristics of the equipment and devices in the circuit.
The ***Record Plus™*** device is equipped with trip units that react to fault currents when needed but are specifically designed not to react to most inrush-current profiles.
The details included in this section on devices as LV/LV transformers and the time current curves of the breaker published elsewhere in this catalogue allow a definition of the **Im** value.

Instantaneous setting (I) on Electronic breakers
All Electronic ***Record Plus™*** breakers are equipped with this protection device that on detection of a short-circuit exceeding it's set value trip the breaker immediately.
The device has a fixed setting on all SMR1 devices and can be adjusted on all SMR2 trip unit types.
It is primarily used to limit the electrical energy level in the circuit (vs. the timed short-circuit setting ST).

Magnetic setting (Im) or ST setting
Protected Lines
On a short-circuit event the total circuit impedance determines the highest and the lowest current that can flow in the circuit. It is necessary not only to verify if the protective device can interrupt the maximum short-circuit value but also if the device protecting the circuit reacts and disconnects in time at the lowest possible short-circuit value.
Due to the fact that a major part of the circuit impedance is formed by electrical conductors like cables, busbar systems etc. within the circuit, this requirement has a limiting effect on the length of the conductors used in the circuit.

There are two conditions that have to be met:
a) The weakest short-circuit current must be disconnected before the electrical conductors exceed their temperature limits.
b) A current to earth (fault current) must be disconnected before inadvertent contact to normally non-conductive parts causes injury.
Please refer to the pages E.6 and E.13 for more details.

Ground Fault setting (GF) on Electronic breakers
All larger Electronic ***Record Plus™*** breakers can be optionally equipped with a GF sum device that operates on a Residual Current principle.
It 'sums' the values of the secondary circuits in the installed sensors in both the lines and Neutral pole and sends an alarm or trip signal when this value is <> to zero and exceeds the adjusted values.
This device allows the user to set a 'fault' current value (Id) ranging from 02. to 1 times the breaker sensor rating and a trip time delay.
Where the standard breaker settings are insufficient a GFsum device allows the detection of low short-circuit values as the weakest short-circuit current and/or a current to earth (Fault Current).

IdN setting on Residual Current Devices
All ***Record Plus™*** breakers can be optionally equipped with a Residual Current Device (RCD). The device 'sums' the values of the primary circuits in both the lines and Neutral pole by using a summing CT place around all live conducors and the neutral (when present). If the sum differs from zero and exceeds a pre-defined current value and time span the device trips the associated breaker.
This device can be set at a current value (IdN) of 30, 300, 1000, 3000 or 10000 mA and a trip time delay.
Where the standard breaker settings are insufficient an RCD can be used to detect low short-circuit values as the weakest short-circuit current and/or a current to earth (Fault Current).

Protection against short-circuits

Maximum short-circuit ratings

Protective devices as the ***Record Plus***™ circuit breaker must be able to interrupt the maximum short-circuit current at the point where they are installed.
The interruption ratings of these breakers (breaking capacity) can be found elsewhere in this catalogue.
For the calculation of the short-circuit current at the point where the breaker is installed a pan-European document is now available in the form of the R064-003.
The values published here are based on this document.

Power supply
The values mentioned in table indicate the effective values of the highest three phase short-circuit current that is available at the connection terminals of the incoming transformer(s).

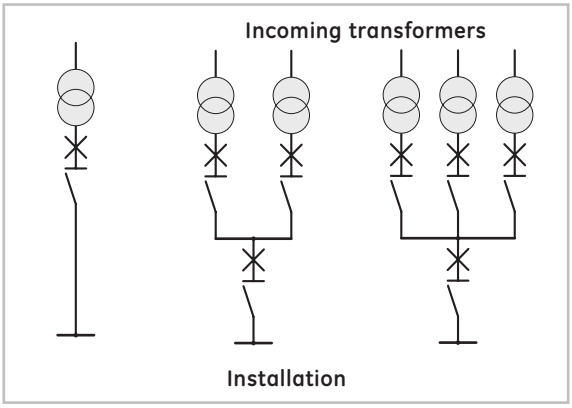

Formulas
Medium voltage impedance

$$Z_Q = \frac{(m \times Uo \times \sqrt{3})^2}{Sk_Q}\ m\Omega$$

MV/LV transformer impedance

$$Z_r = \frac{(m\ Uo\ sqrt\ 3)^2}{S_rT} \times \frac{U_{kr}}{100\%}\ m\Omega$$

Maximum short-circuit calculation

$$Ik_{3max} = \frac{(Cmax. \times m \times Uo \times \sqrt{3})^2}{\sqrt{R^2 + x^2}}\ kA$$

Calculated maximum short-circuit values (3 phase 400V network)

MV/LV Transformer(s)		Medium Voltage power SK_Q in MvA					
S_rT kvA	U_{kr} %	100	150	200	300	400	500
		Maximum short-circuit Values in kA (Ik_{3max})					
100	4	3.5	3.6	3.6	3.6	3.6	3.6
160	4	5.6	5.7	5.7	5.7	5.7	5.8
250	4	8.5	8.7	8.8	8.9	8.9	9.0
315	4	10.6	10.9	11.0	11.1	11.2	11.2
400	4	13.2	13.6	13.8	14.0	14.2	14.2
500	4	16.2	16.8	17.1	17.4	17.6	17.7
630	4	19.8	20.7	21.2	21.7	22.0	22.2
630	5	16.3	16.9	17.2	17.6	17.7	17.8
630	6	13.8	14.3	14.5	14.7	14.8	14.9
800	6	17.1	17.8	18.2	18.5	18.7	18.8
1000	6	20.8	21.8	22.3	22.9	23.2	23.4
1250	6	25.1	26.6	27.4	28.3	28.7	29.0
1600	6	30.6	32.9	34.2	35.6	36.3	36.8
2000	6	36.4	39.7	41.6	43.6	44.7	45.4
2500	6	42.9	47.5	50.2	53.2	54.8	55.9
2 x 400	4	24.2	25.7	26.4	27.2	27.7	27.9
2 x 500	4	29.1	31.2	32.3	33.5	34.2	34.6
2 x 630	4	34.9	37.9	39.6	41.4	42.4	43.0
2 x 630	5	29.3	31.4	32.5	33.8	34.4	34.8
2 x 630	6	25.3	26.8	27.6	28.5	29.0	29.3
2 x 800	6	30.6	32.9	34.2	35.6	36.3	36.8
2 x 1000	6	36.4	39.7	41.6	43.6	44.7	45.4
2 x 1250	6	42.9	47.5	50.2	53.2	54.8	55.9
2 x 1600	6	50.7	57.3	61.3	65.9	68.4	70.0
2 x 2000	6	58.3	67.3	72.8	79.4	83.1	85.5
2 x 2500	6	66.3	78.1	85.7	94.9	100.3	103.9
3 x 400	4	33.6	36.4	37.9	39.6	40.5	41.1
3 x 500	4	39.7	43.7	45.9	48.5	49.8	50.7
3 x 630	4	46.8	52.3	55.6	59.4	61.4	62.7
3 x 630	5	40.0	43.9	46.2	48.8	50.2	51.0
3 x 630	6	34.9	37.9	39.6	41.4	42.4	43.0
3 x 800	6	41.6	46.0	48.5	51.3	52.8	53.8
3 x 1000	6	48.6	54.6	58.2	62.3	64.6	66.0
3 x 1250	6	56.1	64.3	69.3	75.3	78.6	80.8
3 x 1600	6	64.8	76.1	83.3	91.9	97.0	100.3
3 x 2000	6	72.9	87.5	97.2	109.2	116.4	121.2
3 x 2500	6	81.0	99.4	112.1	128.6	138.7	145.6

Terminology

Sk_Q	= short-circuit power of the medium/high voltage network
S_{rT}	= power rating of the MV/LV transformer
U_{kr}	= short-circuit voltage in %, according to HD 398
m	= no load factor; 1.05 assumed
Cmax.	= voltage factor; 1.05 assumed
Uo	= phase to neutral voltage
Ik_{3max}	= maximum 3 phase short-circuit current
X	= total reactance
X_Q	= 0.995 x Z_Q
X_T	= 0.95 x Z_T
R	= total resistance
R_Q	= 0.1 x X_Q
R_T	= 0.31 x Z_T

Influence of cable runs

It is possible to calculate short-circuit values within circuits by determining the impedance, reactance and resistance of the power supply and by adding those of cable runs. These values are used here to calculate the maximum short-circuit levels at the end of a defined cable run.

Values used

Specific resistance of copper and aluminum at 20°C

ρ_0 = 18.51 mΩ mm^2/m. for copper cores
29.41 mΩ mm^2/m. for aluminum cores

Reactance of multicore cables λ 0.08 mΩ /m.

Examples

$Ik_{3\ max.}$ at cable run start 50kA
54 meters of 185 mm^2 cable
$Ik_{3\ max.}$ at cable run end 22kA

$Ik_{3\ max.}$ at cable run start 120kA
12 meters of 185 mm^2 cable
$Ik_{3\ max.}$ at cable run end 80kA

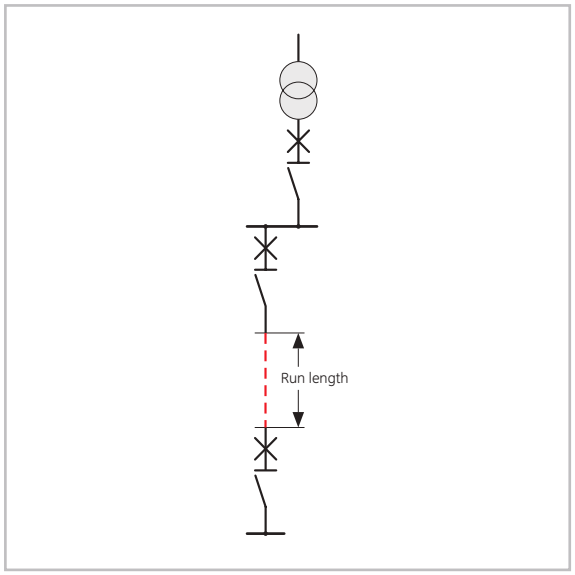

Short-circuit values within circuits

$Ik_{3\ max.}$ without cable run	$IK_{3\ max}$ in kA at point where *Record Plus*™ MCCB is to be installed (This value must be ≤ Icu or Ics)									
145	80	65	50	30	25	22	20	15	10	6
140	80	65	50	30	25	22	20	15	10	6
130	80	65	50	30	25	22	20	15	10	6
120 →	80	65	50	30	25	22	20	15	10	6
110	80	65	50	30	25	22	20	15	10	6
100	65	65	50	30	25	22	20	15	10	6
90	65	65	50	30	25	22	20	15	10	6
80	65	50	50	30	22	20	20	15	10	6
70	65	50	50	25	22	20	20	15	10	6
60	50	50	50	25	22	20	20	15	10	6
50 →	50	36	36	22	20	20	20	15	10	6
45	50	36	30	22	20	20	20	15	10	6
40	36	36	30	20	20	20	15	15	10	6
35	30	30	25	20	20	15	15	15	10	6
30	30	25	22	20	20	15	15	15	10	6
25	22	22	20	15	15	15	15	10	10	6
20	-	-	-	15	15	15	15	10	10	6
15	-	-	-	-	-	10	10	10	10	6
10	-	-	-	-	-	-	-	-	6	6

Cable cross section Cu mm^2	AL mm^2	Required minimum length in meters of cable run of the mentioned cross section to achieve the $Ik_{3\ max}$ mentioned above									
1.5		0.5	0.5	0.5	1	1	1	1	1.5	2	3.5
2.5	**4**	0.5	0.5	0.5	1	1.5	1.5	1.5	2	3.5	5.5
4	**6**	0.5	0.5	1	1.5	2	2.5	2.5	4	5	9
6	**10**	1	1	1.5	2.5	3	3.5	3.5	5	8	13
10	**16**	1	2	2	4	5	5.5	6	8	13	21
16	**25**	1.5	2.5	3.5	6	8	9	10	13	20	35
25	**35**	2.5	4	5	9	12	13	15	20	32	55
35	**50**	3	4	7	13	16	18	20	28	42	70
50	**70**	4	6	9	18	22	25	29	39	60	100
70	**95**	6	8	12	24	30	35	40	55	85	135
2 x 35	**2 x 50**	6	8	13	25	32	36	40	55	85	140
95	**150**	7	11	16	32	39	46	51	70	110	180
2 x 50	**2 x 70**	8	12	18	35	44	52	58	80	120	200
120	**185**	9	13	19	38	48	55	62	85	130	220
150	**240**	10	15	23	46	58	66	75	100	155	255
2 x 70	**2 x 95**	11	16	24	50	60	70	80	110	170	270
185		12	18	27 →	54	65	76	84	116	180	300
240		14	21	32	32	78	88	98	135	210	340
2 x 95	**2 x150**	14	21	32	65	80	95	105	140	220	360
300		16	24	35	70	85	100	110	150	230	380
2 x120	**2 x185**	17	27	42	80	95	110	125	170	260	430
2 x150		20	30	48	91	115	135	150	200	310	510
3 x 95	**3 x150**	21	33	51	95	120	140	155	210	320	540
2 x185		23	35	53	105	130	155	170	235	360	590
3 x120		25	38	57	115	145	165	185	255	390	645
2 x240		28	41	62	125	155	180	200	270	410	675
3 x150	**3 x240**	30	45	68	140	170	200	220	300	460	765
3 x185		35	53	79	160	195	230	255	350	530	880
3 x240		41	80	125	185	230	265	295	410	620	

Protection against short-circuits

Weakest short-circuit current

It is necessary to verify that the permissible thermal stress in conductors is not exceeded at the maximum short-circuit level and at the weakest short-circuit level. Verification on the maximum short-circuit level is described on page E.4 of this catalogue. For the weakest short-circuit value it is necessary to verify that the protective devices as the ***Record Plus™*** circuit breaker trips before the conductors reach the mentioned limits, this for operating times of 0.1 to 5 seconds.

Permissible thermal stress in conductors
Clause 434.5.2 of the IEC 60364 4d. 03 - 2008 defines that for interruption times between 0.1 and 5 seconds, the following formula applies:

$$t = (k^* S/I)^2 \quad \text{or it's equivelant} \quad k^2 S^2 = I^2 t$$

Terminology
t = duration of the short-circuit in seconds
k = factor provided by the standard; depending on the material the conductor is made of and it's insulation
S = cross section of the conductor
I = effective short-circuit current. (r.m.s value)

The tables included here indicates the factor k for conductors with different insulation materials and the calculated energy values ($K^2 S^2$ values in A^2S).

Record Plus Circuit breaker application
To meet this condition it is necessary to verify if the I^2t value of the protection device is lower than or equal to the $K^2 S^2$ value of the used conductors for interruption times between 0.1 and 5 seconds.

K factors in accordance with the IEC 60364-4-43 ed.03

Insulation & maximum temperature	Copper (Cu)	Aluminium (Al)
PVC - 70° < 300 sq.mm	115	76
PVC - 70° ≥ 300 sq.mm	103	68
PVC - 90° < 300 sq.mm	100	86
PVC - 90° ≥ 300 sq.mm	86	57
XLPE & EPR 90°	143	94
Rubber 60°	141	93
Mineral, bare unsheathed 105°	135 or 115(1)	-

(1) The 115 value is be used for conductors exposed to touch.

Under normal conditions it is assumed that the current setting of the Magnetic or ST device and the associated tripping time is used to verify if this condition is met. This current value can be used to verify if the breaker trips on the weakest short-circuit current.
In certain cases (specifically with Electronic Trip Units) a lower current level with an interruption time of 5 seconds can be assummed.

Weakest short-circuit current calculations
For the most commonly applied network configuration, 3 phase with neutral, the weakest short-circuit is the Phase to Neutral value.
The network configuration determines the value of this current. Cases where the Phase to Earth or two Phase value is the weakest are also commonplace.
Basically, the weakest short-circuit current is determined by the highest impedance loop in the circuit that the breaker is protecting.
The impedance of this loop is mainly determined by the conductors included in the circuit, thus their maximum length is limited. An approximation of the effect of the conductor or cable length on the weakest short-circuit is possible by using the following formula:

$$Ikmin = 0.8 \times \frac{Cmin \times Uo}{\sqrt{R^2 + x^2}} \times k1 \times k2 \times k3 \text{ Amp}$$

Terminology
Ikmin = Weakest short-circuit current
0.8 = Assumed factor for the impedance of the upstream network
Cmin = Voltage factor; 0.95 assumed
Uo = Phase to neutral voltage
X = Reactance of the conductors or cables in the circuit reactance of multi core cables X in mΩ/m 0.08
R = Resistance of the conductors or cables in the circuit based on the following basic data: (warm state)
22.069 mΩ mm^2/m. for copper cores(2)
37.178 mΩ mm^2/m. for aluminum cores(2)
k1, k2 k3 = Correction factors, see next page

(2) = 1.28 x 17.241 and 1.28 x 28.264 (see IEC 60364-4-43)

Maximum permissible thermal stress in Conductors for operating times from 0.1 to 5 seconds

Insulation	Core	Cross section in sq. mm & maximum permissible thermal stress in A^2s															
		1.5	2.5	4	6	10	16	25	35	50	70	95	120	150	185	240	300
		x10⁴	x10⁴	x10⁴	x10⁴	x10⁶	x10⁶	x10⁶	x10⁶	x10⁶	x10⁸	x10⁸	x10⁸	x10⁸	x10⁸	x10⁸	x10⁸
PVC - 70°	Cu	2.976	8.266	21.160	47.610	1.323	3.386	8.266	16.201	33.063	0.648	1.194	1.904	2.976	4.526	7.618	9.548
	Al	1.300	3.610	9.242	20.794	0.578	1.479	3.610	7.076	14.440	0.283	0.521	0.832	1.300	1.977	3.327	4.162
PVC - 90°	Cu	2.250	6.250	16.000	36.000	1.000	2.560	6.250	12.250	25.000	0.490	0.903	1.440	2.250	3.423	5.760	6.656
	Al	1.664	4.623	11.834	26.626	0.740	1.893	4.623	9.060	18.490	0.362	0.667	1.065	1.664	2.531	4.260	2.924
XLPE & EPR 90°	Cu	4.601	12.781	32.718	73.616	2.045	5.532	12.781	25.050	51.123	1.002	1.846	2.945	4.601	6.999	11.779	17.893
	Al	1.988	5.523	14.138	31.810	0.884	2.262	5.523	10.824	22.090	0.433	0.797	1.272	1.988	3.024	5.090	7.784
Rubber 60°	Cu	4.473	12.426	31.810	71.572	1.988	5.090	12.426	24.354	49.703	0.974	1.794	2.863	4.473	6.804	11.451	17.893
	Al	1.946	5.406	13.838	31.136	0.865	2.214	5.406	10.595	21.623	0.424	0.781	1.245	1.946	2.960	4.982	7.784
Mineral bare 105° k=135	Cu	4.101	11.391	29.160	65.610	1.823	4.666	11.391	22.326	45.563	0.893	1.645	2.624	4.101	6.238	10.498	16.403
Mineral bare 105° k=115	Cu	2.976	8.266	21.160	47.610	1.323	3.386	8.266	16.201	33.063	0.648	1.194	1.904	2.976	4.526	7.618	11.903

Maximum conductor length

To meet the requirements the short-circuit device of the circuit breaker (Im) must react to the weakest short-circuit current. The table indicates the maximum cable length where this condition is still met.
The tolerances on the settings of the short-circuit device in the breaker are taken into account (factor included in calculations of 1.2).

Correction factors k
For a 3 phase circuit with no neutral and a voltage of 400V between phases:

k1 = 1.74

For a single phase circuit with neutral and a voltage of 230V between phase and neutral:

k1 = 1.00

For a 3 phase circuit with neutral, a voltage of 400V between phase and a neutral with 0.5 x the phase cross section:

k1 = 0.67

For a number of multi-core cables in parallel

k2 for 2 cores = 2.00
k2 for 3 cores = 2.65

For multicore cables with conductors made of aluminum:

Cu conductor Cross section S in mm²	k3
= 4 ≤ 50	0.63
70	0.64
95	0.65
120	0.66
150	0.67
185	0.69
240	0.72
300	0.76

Maximum Cu conductor length in meters based on a Phase to Neutral voltage (Uo) of 230V and valid for multicore conductors with stress calculations based on a k of 100
(Areas in grey indiacte that stress requirements are exceeded)

Cross section S in mm²	Disconnection time (s)	Record Plus™ Im or ST setting in Amps & conductor length in Meters										
		50	75	100	125	150	175	200	250	300	350	400
1,5	0,10	99	66	50	40	33	28	25	20	17	14	12
2,5	0,10	165	110	83	66	55	47	41	33	28	24	21
4	0,10	264	176	132	106	88	75	66	53	44	38	33
6	0,10	396	264	198	158	132	113	99	79	66	57	49
10	0,10	660	440	330	264	220	188	165	132	110	94	82
16	0,10	1054	703	527	422	351	301	264	211	176	151	132
25	0,50	1643	1096	822	657	548	470	411	329	274	235	205
35	0,50	2292	1528	1146	917	764	655	573	458	382	327	286
50	0,50	3247	2165	1624	1299	1082	928	812	649	541	464	406
70	0,50	4479	2986	2239	5516	1493	1280	1120	896	746	640	560
95	1,05	5929	3953	2964	5295	1976	1694	1482	1186	988	847	741
120	1,05	7263	4842	3632	4900	2421	2075	1816	1453	1211	1038	908

Cross section S in mm²	Disconnection time (s)	Record Plus™ Im or ST setting in Amps & conductor length in Meters										
		450	500	600	700	800	900	1000	1250	1500	1750	2000
2,5	0,10	18	17	14	12							
4	0,10	29	26	22	19	16	15	13				
6	0,10	44	40	33	28	25	22	20	16	13	11	
10	0,10	73	66	55	47	41	37	33	26	22	19	16
16	0,10	117	105	88	75	66	59	53	42	35	30	26
25	0,10	183	164	137	117	103	91	82	66	55	47	41
35	0,10	255	229	191	164	143	127	115	92	76	65	57
50	0,10	361	325	271	232	203	180	162	130	108	93	81
70	0,50	498	448	373	320	280	249	224	179	149	128	112
95	1,05	659	593	494	423	371	329	296	237	198	169	148
120	1,05	807	726	605	519	454	404	363	291	242	208	182
150	1,05	966	870	725	621	544	483	435	348	290	249	217
185	1,05	1127	1014	845	724	634	563	507	406	338	290	254
240	1,05	1328	1195	996	854	747	664	598	478	398	341	299
300	1,05	1489	1340	1117	957	838	745	670	536	447	383	335

Cross section S in mm²	Disconnection time (s)	Record Plus™ Im or ST setting in Amps & conductor length in Meters										
		2500	3000	3500	4000	4500	5000	5500	6000	6500	7000	7500
10	0,10	13	11	9								
16	0,10	21	18	15	13							
25	0,10	33	27	23	21	18	16	15	14	13	12	11
35	0,10	46	38	33	29	25	23	21	19	18	16	15
50	0,10	65	54	46	41	36	32	30	27	25	23	22
70	0,50	90	75	64	56	50	45	41	37	34	32	30
95	0,50	119	99	85	74	66	59	54	49	46	42	40
120	0,50	145	121	104	91	81	73	66	61	56	52	48
150	1,05	174	145	124	109	97	87	79	72	67	62	58
185	1,05	203	169	145	127	113	101	92	85	78	72	68
240	1,05	239	199	171	149	133	120	109	100	92	85	80
300	1,05	268	223	191	168	149	134	122	112	103	96	89

Cross section S in mm²	Disconnection time (s)	Record Plus™ Im or ST setting in Amps & conductor length in Meters									
		8000	8500	9000	9500	10000	11000	12000	13000	14000	15000	16000
35	0,10	14	13	13	12	11	10					
50	0,10	20	19	18	17	16	15	14	12	12	11	
70	0,50	28	26	25	24	22	20	19	17	16	15	14
95	0,50	37	35	33	31	30	27	25	23	21	20	19
120	0,50	45	43	40	38	36	33	30	28	26	24	23
150	1,05	54	51	48	46	43	40	36	33	31	29	27
185	1,05	63	60	56	53	51	46	42	39	36	34	32
240	1,05	75	70	66	63	60	54	50	46	43	40	37
300	1,05	84	79	74	71	67	61	56	52	48	45	42

Notes
The disconnection time of 0.1 second is the lowest value defined in the standard and can be applied for the ***Record Plus™*** FD160, FE 160 and FE250 breaker types.
The 0.5 second disconnection times can be used for all ***Record Plus™*** breaker types FG400, FG630, FK800, FK1250 & FK1600. (with and without time setting).
For cross sections >70 sq.mm the use of breakers with time a setting of 1 second as the EntelliGuard ACB is assummed. The resulting cable lengths also apply for Record Plus breakers.

Protection against Electric Shock

The 2001 edition of the IEC 60364-4-41 protection under normal conditions was referred to as 'direct contact and protection under fault conditions was referred to as 'Protection against indirect contact'.
In the 2005 edition of the same standard the general terminology 'Protection against Electrical shock' has been adapted whilst two new terms have been introduced:

1) Protection under normal conditions now designated: **Basic Protection**
2) Protection under fault conditions now designated: **Fault protection**

Basic protection being provided by basic insulation of live parts, barriers or enclosures whilst fault protection is provided by protective equipotential bonding and automatic disconnection in case of a fault in TN, TT and IT systems.
The Protective measure:
automatic disconnection of the power supply
being described in paragraph 411.
(Replacing paragraph 413 of the 2001 edition)

Generally, the required automatic disconnection time depends on the configuration of the system and the nominal voltage between line and earth (Uo). It is defined in clause 411.3.2.2 and table 41.1 of which an extract can be found on this page.
In addition to this table the following general requirements are put forward:

In TN systems, a disconnection time not exceeding 5 seconds is permitted for distribution circuits and circuits larger than 32A. (Not applicable in Belgium where table 41.1 applies generally)

In TT systems, a disconnection time not exceeding 1 second is permitted for distribution circuits and circuits larger than 32A.

In IT systems an automatic disconnection of the supply is generally not required on the first fault (Except in Norway). On a second fault, depending on the systems configuration, a disconnection time not exceeding **1 second or 5 seconds** is permitted for distribution circuits and circuits larger than 32A.

If the automatic disconnection times cannot be achieved in the required time supplementary protective equipotential bonding shall be provided.

In all network configurations it is necessary to ensure that the protective device will interrupt the circuit within the defined automatic disconnection times. Verification being necessary for the worst case scenario taking into account the Phase to Earth voltage, the fault current and the characteristics of the protection device.

Record Plus™ Circuit breakers

As moulded case circuit breakers the Record Plus meet a number of the requirements of basic protection.
The double isolated casing offering a so called class II protection. The device when installed with cover plates and accessories as terminal shields offers a protection degree of up to IP40 or IP54.
When used for fault protection to automatically disconnect the supply Record Plus meet the required automatic disconnection times across a broad, adjustable current range. Where this current range does not suffice an RCD device can be added to breakers with ratings up to 630A whilst the GFsum option using a Residual Current Principle can be applied on larger breakers.

Maximum disconnection times for final AC circuits not exceeding 32A

System	Maximum disconnection times in seconds			
	50V < Uo ≤ 120V AC	120V < Uo ≤ 230V AC	230V < Uo ≤ 400V AC	Uo > 400V AC [3]
TN[1]	0,80	0,40	0,20	0,10
TT[2]	0,30	0,20	0,07	0,04

Notes to table
Where disconnection is provided by an RCD the above mentioned disconnection times relate to residual fault currents that are much higher than the rated residual operating current (typicaly 5 x Idn).
In Belgium, China and the Netherlands local regulations are more extensive.
(1) Also applies to IT systems with a distributed or non distributed neutral or mid point conductor
(2) Also applies to IT systems in which the exposed-conductive parts are earthed in groups or individually.
(3) In Belgium, above 400V the Belgian safety curves apply. (see local Wiring rules)

TT system characteristics

One point of the power supply is connected to earth whilst all conductive parts in the installation are connected to electrically independent earth electrodes.

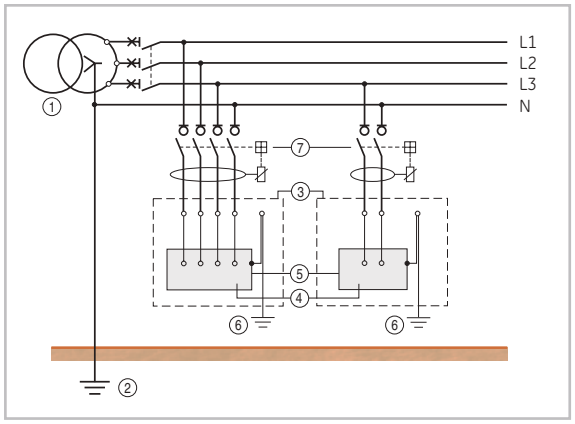

① Power supply.
② Power supply earthing (R_N)
③ Low voltage installation, consumer portion.
④ Equipment present in installation.
⑤ Exposed conductive parts/surfaces.
⑥ Installation earthing. (R_A)
⑦ Recommended RCD device.

Under fault conditions disconnection of the supply may be assured by an overcurrent device as ***Record Plus™*** provided a suitably low value of the fault circuit impedance Zs is reliably assured. The following condition shall then be fulfilled:

$$Z_s \times I_a \leq U_0$$

where:

Z_s = the impedance in Ω of the fault loop compromising
- the Source
- the line conductor up to the point of the fault
- the protective conductor of the exposed parts
- the earthing conductor
- the earth electrode of the installation (RA)
- the earth electrode of the source (RN)

I_a = the current in A causing the protection device to disconnect within the time as specified in table 41.1 (see excerpt on page E.8) or within 1 second depending on the stipulated requirements

U_0 = the nominal a.c. or d.c. line to earth voltage

Generally under fault conditions the disconnection of the supply is assured by a residual current device (RCD). The device must disconnect within the time as specified in table 41.1 (see excerpt on page E.8) or within 1 second depending on the stipulated requirements and the following condition shall be fulfilled:

$$R_a \times I_{\Delta n} \leq 50V$$

where:

R_a = the resistance in Ω of the protective conductor of exposed parts and that of the earth electrode

$I_{\Delta n}$ = the rated residual operating current of the RCD in A

Notes

Where Ra is unknown it may be replaced by Zs.
The disconnection times mentioned in table 41.1 (see excerpt on page E.8) apply to residual fault currents that are much higher than the rated residual operating current (typicaly 5 x Idn).

TN system characteristics

One or more points of the power supply are connected to earth whilst all conductive parts in the installation are electrically connected to this point by protective conductors. (PE or PEN conductors). The system exits in three main variants:

TNC The neutral and protective conductor are combined. (PEN)

TNS The neutral(N) and protective conductor (PE) are separate.

TNCS The supply is configured as a TNC, the system changes to a TNS system at a pre-defined point in the LV installation.

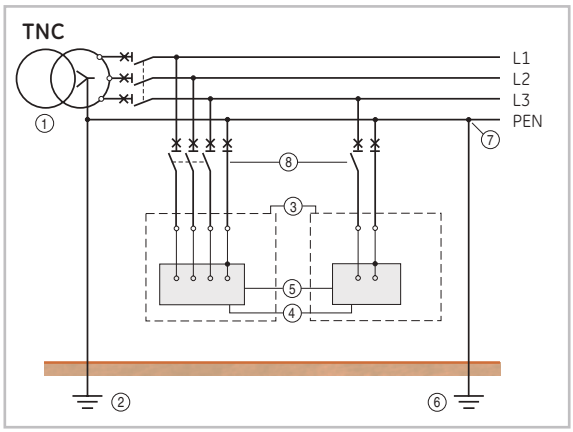

① Power supply.
② Power supply earthing.
③ Low voltage installation, consumer portion.
④ Equipment present in installation.
⑤ Exposed conductive parts/surfaces.
⑥ Additional supply earthing.
⑦ Protective conductor combined with the neutral.
⑧ Protective device.

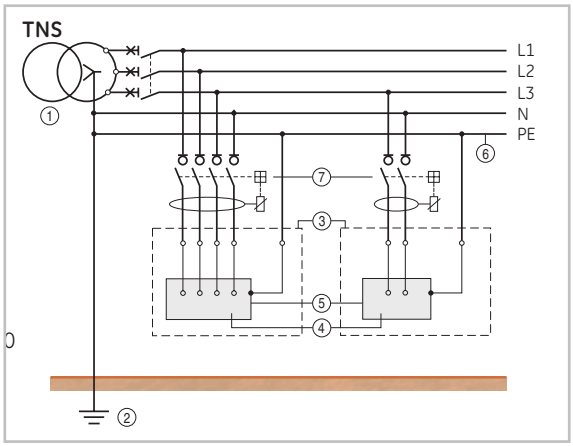

① Power supply.
② Power supply earthing.
③ Low voltage installation, consumer portion.
④ Equipment present in installation.
⑤ Exposed conductive parts/surfaces.
⑥ Protective conductor.
⑦ Protective device.

Remark: a TNCS system is not depicted

TN system Characteristics (ct'd)

Under fault conditions disconnection of the supply may be assured by overcurrent devices as Record Plus or by residual current devices (RCDs). Where RCD's are used the circuit should also be protected by an overcurrent protection device.
In TN-C systems the use of RCDs is prohibited whilst in TN-CS systems a PEN conductor must be connected to the line or source side of the RCD.
The following condition shall then be fulfilled:

$$Z_s \times I_a \leq U_0$$

where:

Z_s = the impedance in Ω of the fault loop compromising
- the Source
- the line conductor up to the point of the fault
- the protective conductor of the exposed parts

I_a = the current in A causing the protection device to disconnect within the time as specified in table 41.1 (see excerpt on page E.8) or within 5 seconds depending on the stipulated requirements.

U_0 = the nominal a.c. or d.c. line to earth voltage.

IT system characteristics

The supply is isolated from earth or connected to earth by means of an impedance of a relatively high value. The conductive parts in the installation are connected to earth electrodes.

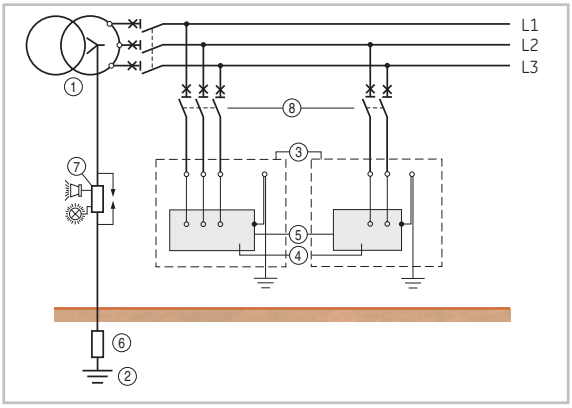

① Power supply.
② Power supply earthing.
③ Low voltage installation, consumer portion.
④ Equipment present in installation.
⑤ Exposed conductive parts/surfaces.
⑥ Impedance for insulation from earth.
⑦ Insulation monitoring device + surge protection
⑧ Protective device.

On a first fault to earth is is not required that an automatic disconnection of the supply takes place provided that the exposed conductive parts are earthed meeting the following conditon:

$$R_A \times I_d \leq 50V$$

where:

R_A = the resistance in Ω of the protective conductor of exposed parts and that of the earth electrode.

I_d = the fault current between line and exposed conductive parts in A of the first fault taking into account leakage currents and the total earthing impedance of the installation.

It is recommended that the first fault to earth is eliminated as soon as possible. To indicate the first fault between a live part to exposed conductors or earth insulation monitoring devices shall be provided.
If the supply of the first fault event is not interrupted by a protection device a residual current monitoring device or insulation fault location system can also be used. These devices produce a visible and/or audible signal persisting for as long as the fault exists.

After the ocurrence of a first fault a second fault on a different live conductor shall result in an automatic disconnection of the supply.
Where exposed conductive parts are interconnected by a protective conductor collectively linked to the same earthing system an IT is very similar to a TN system to which the following condtions apply.

Disconnection of the supply may be assured by overcurrent devices as Record Plus or by residual current devices (RCDs). Where RCD's are used the circuit should also be protected by an overcurrent protection device.

If the neutral or mid point conductor **is not** distributed the following condition must be fulfilled:

$$2 \times Z_s \times I_a \leq U$$

If the neutral or mid point conductor **is** distributed the following condition must be fulfilled:

$$2 \times Z'_s \times I_a \leq U_0$$

where:

Z_s = the impedance in Ω of the fault loop compromising
- the line conductor and the protective conductor of the circuit.

Z'_s = the impedance in Ω of the fault loop compromising
- the neutral conductor and the protective conductor of the circuit.

I_a = the current in A causing the protection device to disconnect within the time as specified in table 41.1 for TN systems (see excerpt on page E.8) or within 5 seconds depending on the stipulated requirements.

U = the nominal a.c. or d.c. line to line voltage.

U_0 = the nominal a.c. or d.c. line to neutral or mid -point conductor voltage.

Where the exposed conductive parts are earthed in groups or individually the supply must be disconnected within the time as specified in table 41.1 for TT systems (see excerpt on page E.8) or within 1 second depending on the stipulated requirements and the following conditon shall be fulfilled:

$$R_A \times I_d \leq 50V$$

where:

R_A = the sum of resistances in Ω of the earth electrode and the protective conductor to the exposed conductive parts.

I_d = the current in A causing the protection device to disconnect within the time as specified in table 41.1 for TT systems (see excerpt on page E.8) or within 1 second depending on the stipulated requirements.

Notes
When residual current devices (RCDs) are used the disconnection times mentioned in table 41.1 (see excerpt on page E.8) apply to residual fault currents much higher than the rated residual operating current (typicaly 5 x Idn).

Required Calculations

In order to meet the safety requirements under fault conditions where disconnection of the supply is required it is necessary to verify that the protective device will disconnect the supply within the defined connection times.

In all three systems, TT, TN & IT, the use of a overcurrent protective device, a residual current device or a combination of both is required

A Record Plus moulded case circuit breaker is an over-current protection device in accordance with the IEC 60947. The product line includes Residual current devices that sum the residual current with one summing current transformer (RCD block) and a GFsum device using the secondary current transformers placed in the Phase and Neutral conductors in the same manner.

For all three devices the current at which the protective device interrupts the supply under fault conditions **(I_a)** at the interruption time required in table 41.1 and at 1 and 5 seconds is provided here. Also tabulated is the applicable **R_A** value in TT networks when RCDs are used. Using the most common line to earth voltage **U_0** the maximum allowable **Z_S** and **Z'_S** values for a circuit protected by these devices have been calculated and indicated in a number of tables included here.

Tables

The table on this page can be used for Record Plus breakers with thermal magnetic trip units and the associated line of add on Residual current devices.
On pages E.12 and E.13 the tables indicate the values that can be used for Record Plus circuit breakers with electronic trip units whilst those on page E.14 contain the values for electronic devices with an integrated Gf sum protection.

Disconnection times, the associated current levels and calculated Z_S & Z'_S values meeting IEC 60364-4-41 clause 411
Record Plus Circuit breakers: FD160, FE160, FE250, FK800 & FK1250 with LTM & LTMD type Trip Units

Magnetic setting Im (A)	I_a current (A)	Max. time (s)	Z_S value in Ω at a U_0 in Volts a.c. of 127	220	230	250	400
63	75.6	0.06	1.680	2.910	3.042	3.307	5.291
160	192	0.06	0.661	1.146	1.198	1.302	2.083
200	240	0.06	0.529	0.917	0.958	1.042	1.667
250	300	0.06	0.423	0.733	0.767	0.833	1.333
320	384	0.06	0.331	0.573	0.599	0.651	1.042
400	480	0.06	0.265	0.458	0.479	0.521	0.833
500	600	0.06	0.212	0.367	0.383	0.417	0.667
600	720	0.06	0.176	0.306	0.319	0.347	0.556
630	756	0.06	0.168	0.291	0.304	0.331	0.529
650	780	0.06	0.163	0.282	0.295	0.321	0.513
700	840	0.06	0.151	0.262	0.274	0.298	0.476
750	900	0.06	0.141	0.244	0.256	0.278	0.444
800	960	0.06	0.132	0.229	0.240	0.260	0.417
900	1080	0.06	0.118	0.204	0.213	0.231	0.370
1000	1200	0.06	0.106	0.183	0.192	0.208	0.333
1250	1500	0.06	0.085	0.147	0.153	0.167	0.267
1500	1800	0.06	0.071	0.122	0.128	0.139	0.222
1750	2100	0.06	0.060	0.105	0.110	0.119	0.190
2000	2400	0.06	0.053	0.092	0.096	0.104	0.167
2250	2700	0.06	0.047	0.081	0.085	0.093	0.148
2500	3000	0.06	0.042	0.073	0.077	0.083	0.133
3000	3600	0.06	0.035	0.061	0.064	0.069	0.111
4000	4800	0.04	0.026	0.046	0.048	0.052	0.083
4500	5400	0.04	0.024	0.041	0.043	0.046	0.074
5000	6000	0.04	0.021	0.037	0.038	0.042	0.067
5500	6600	0.04	0.019	0.033	0.035	0.038	0.061
6000	7200	0.04	0.018	0.031	0.032	0.035	0.056
6500	7800	0.04	0.016	0.028	0.029	0.032	0.051
7000	8400	0.04	0.015	0.026	0.027	0.030	0.048
7500	9000	0.04	0.014	0.024	0.026	0.028	0.044
8000	9600	0.04	0.013	0.023	0.024	0.026	0.042
8500	10200	0.04	0.012	0.022	0.023	0.025	0.039
9000	10800	0.04	0.012	0.020	0.021	0.023	0.037
9500	11400	0.04	0.011	0.019	0.020	0.022	0.035
10000	12000	0.04	0.011	0.018	0.019	0.021	0.033
11000	13200	0.04	0.010	0.017	0.017	0.019	0.030
12000	14400	0.04	0.009	0.015	0.016	0.017	0.028
12500	15000	0.04	0.008	0.015	0.015	0.017	0.027

Record Plus with add on Residual Current devices type FDQ, FEQ & FGQ.
Values in grey background and red font do not meet the requirements of table 41.1. Values in grey background and orange font do not meet the requirements of table 41.1 in TT systems.

$I_{\Delta}n$ setting Im (A)	Time setting (ms)	I_a current (A)	Max. time (s)	ZS value in Ω at a U0 in Volts a.c. of 220	230	250	400	
0.03	inst	0.15	0.04	847	1467	1533	1667	2667
0.3	inst	1.5	0.04	84.67	147	153	167	267
	60	1.5	0.1	84.67	147	153	167	267
	150	1.5	0.2	84.67	147	153	167	267
	300	1.5	0.4	84.67	147	153	167	267
	600	1.5	0.8	84.67	147	153	167	267
1	inst	5	0.04	25.40	44.00	46.00	50.00	80.00
	60	5	0.1	25.40	44.00	46.00	50.00	80.00
	150	5	0.2	25.40	44.00	46.00	50.00	80.00
	300	5	0.4	25.40	44.00	46.00	50.00	80.00
	600	5	0.8	25.40	44.00	46.00	50.00	80.00
3	inst	15	0.04	8.47	14.67	15.33	16.67	26.67
	60	15	0.1	8.47	14.67	15.33	16.67	26.67
	150	15	0.2	8.47	14.67	15.33	16.67	26.67
	300	15	0.4	8.47	14.67	15.33	16.67	26.67
	600	15	0.8	8.47	14.67	15.33	16.67	26.67
10	inst	50	0.04	2.54	4.40	4.60	5.00	8.00
	60	50	0.1	2.54	4.40	4.60	5.00	8.00
	150	50	0.2	2.54	4.40	4.60	5.00	8.00
	300	50	0.4	2.54	4.40	4.60	5.00	8.00
	600	50	0.8	2.54	4.40	4.60	5.00	8.00

RA values in TT & IT networks with add on Residual current devices type FDQ, FEQ & FGQ meeting IEC 60364-4-41 clause 411

$I_{\Delta}n$	setting in A	0.03	0.30	1	3	10
R_A	values in Ω	1667	166.67	50	16.67	5

Disconnection times, current levels and calculated Z_S & Z'_S values for Record Plus Circuit

Breaker FE160 with SMR1 Trip Unit In = 25A, Ir = 25A(1) meeting table 41.1

Short time setting Ist (x Ir)	I_a current (A)	Max. time (s)	Z_S value in Ω at a U_0 in Volts a.c. of						
			127	220	230	250	250	400	400
			TT&TN	TT&TN	TT&TN	TN	TT(2)	TN	TT(2)
2	60	0.10	2.117	3.667	3.833	4.167	-	6.667	-
2.5	75	0.10	1.693	2.933	3.067	3.333	-	5.333	-
3	90	0.10	1.411	2.444	2.556	2.778	-	4.444	-
4	120	0.10	1.058	1.833	1.917	2.083	-	3.333	-
5	150	0.10	0.847	1.467	1.533	1.667	-	2.667	-
6	180	0.10	0.706	1.222	1.278	1.389	-	2.222	-
8	240	0.07	0.529	0.917	0.958	1.042	1.042	1.667	1.667
10	300	0.07	0.423	0.733	0.767	0.833	0.833	1.333	1.333
12	360	0.07	0.353	0.611	0.639	0.694	0.694	1.111	1.111
13	385	0.04	0.330	0.571	0.597	0.649	0.649	1.039	1.039

Breaker FE160 with SMR1 trip unit In = 63A. Ir = 32A(1) meeting table 41.1

Short time setting Ist (x Ir)	I_a current (A)	Max. time (s)	Z_S value in Ω at a U_0 in Volts a.c. of						
			127	220	230	250	250	400	400
			TT&TN	TT&TN	TT&TN	TN	TT(2)	TN	TT(2)
2	77	0.10	1.654	2.865	2.995	3.255	-	5.208	-
2.5	96	0.10	1.323	2.292	2.396	2.604	-	4.167	-
3	115	0.10	1.102	1.910	1.997	2.170	-	3.472	-
4	154	0.10	0.827	1.432	1.497	1.628	-	2.604	-
5	192	0.10	0.661	1.146	1.198	1.302	-	2.083	-
6	230	0.10	0.551	0.955	0.998	1.085	-	1.736	-
8	307	0.07	0.413	0.716	0.749	0.814	0.814	1.302	1.302
10	384	0.07	0.331	0.573	0.599	0.651	0.651	1.042	1.042
12	461	0.07	0.276	0.477	0.499	0.543	0.543	0.868	0.868
13	499	0.04	0.254	0.441	0.461	0.501	0.501	0.801	0.801

Breaker FE160 with SMR1 type trip unit In = 63A, Ir = 63A(1)
Disconnection time ≤ 1 sec. (TT) or 5 sec. (TN)

Short time setting Ist (x Ir)	I_a current (A)	Max. time (s)	Z_S value in Ω at a U_0 in Volts a.c. of					
			127	220	230	250	400	
			TT&TN	TT&TN	TT&TN	TT&TN	TT&TN	
2	151	0.10	0.840	1.455	1.521	1.653	2.646	
2.5	189	0.10	0.672	1.164	1.217	1.323	2.116	
3	227	0.10	0.560	0.970	1.014	1.102	1.764	
4	302	0.10	0.420	0.728	0.761	0.827	1.323	
			TT	TT	TT	TT	TT	
5	378	0.10	0.336	0.582	0.608	0.661	1.058	
6	454	0.10	0.280	0.485	0.507	0.551	0.882	
8	605	0.07	0.210	0.364	0.380	0.413	0.661	
10	756	0.07	0.168	0.291	0.304	0.331	0.529	
12	907	0.07	0.140	0.243	0.254	0.276	0.441	
			TN	TN	TN	TN	TN	Line
Ir = 63A	378	5.000	0.336	0.582	0.608	0.661	1.058	mode

Breaker FE160 with SMR1 type trip unit In = 125A, Ir = 125A(1)
Disconnection time ≤ 1 sec. (TT) or 5 sec. (TN)

Short time setting Ist (x Ir)	I_a current (A)	Max. time (s)	Z_S value in Ω at a U_0 in Volts a.c. of					
			127	220	230	250	400	
			TT&TN	TT&TN	TT&TN	TT&TN	TT&TN	
2	300	0.20	0.423	0.733	0.767	0.833	1.333	
2.5	375	0.20	0.339	0.587	0.613	0.667	1.067	
3	450	0.20	0.282	0.489	0.511	0.556	0.889	
4	600	0.20	0.212	0.367	0.383	0.417	0.667	
			TT	TT	TT	TT	TT	
5	750	0.10	0.169	0.293	0.307	0.333	0.533	
6	900	0.10	0.141	0.244	0.256	0.278	0.444	
8	1200	0.10	0.106	0.183	0.192	0.208	0.333	
10	1500	0.10	0.085	0.147	0.153	0.167	0.267	
12	1800	0.07	0.071	0.122	0.128	0.139	0.222	
			TN	TN	TN	TN	TN	Line
Ir = 125A	750	5.000	0.169	0.293	0.307	0.333	0.533	mode

Breaker FE160 with SMR1 type trip unit In = 160A, Ir = 160A(1)
Disconnection time ≤ 1 sec. (TT) or 5 sec. (TN)

Short time setting Ist (x Ir)	I_a current (A)	Max. time (s)	Z_S value in Ω at a U_0 in Volts a.c. of					
			127	220	230	250	400	
			TT&TN	TT&TN	TT&TN	TT&TN	TT&TN	
2	384	0.20	0.331	0.573	0.599	0.444	1.042	
2.5	480	0.20	0.265	0.458	0.479	0.444	0.833	
3	576	0.20	0.220	0.382	0.399	0.444	0.694	
4	768	0.20	0.165	0.286	0.299	0.444	0.521	
			TT	TT	TT	TT	TT	
5	960	0.10	0.132	0.229	0.240	0.444	0.417	
6	1152	0.10	0.110	0.191	0.200	0.444	0.347	
8	1536	0.10	0.083	0.143	0.150	0.444	0.260	
10	1920	0.10	0.066	0.115	0.120	0.444	0.208	
12	2304	0.07	0.055	0.095	0.100	0.444	0.174	
			TN	TN	TN	TN	TN	Line
Ir = 160A	960	5.000	0.132	0.229	0.240	0.260	0.417	mode

(1) For other settings please refer to table:
"Multiplication factors for Z_S values" on page E.13

(2) In IT systems the lowest Z_S setting can also be used for Ist settings lower than 8 x Ir

Breaker FE250 with SMR1 type trip unit In = 125A, Ir = 125A(1)
Disconnection time ≤ 1 sec. (TT) or 5 sec. (TN)

Short time setting Ist (x Ir)	I_a current (A)	Max. time (s)	Z_S value in Ω at a U_0 in Volts a.c. of					
			127	220	230	250	400	
			TT&TN	TT&TN	TT&TN	TT&TN	TT&TN	
2	300	0.20	0.423	0.733	0.767	0.833	1.333	
2.5	375	0.20	0.339	0.587	0.613	0.667	1.067	
3	450	0.20	0.282	0.489	0.511	0.556	0.889	
4	600	0.20	0.212	0.367	0.383	0.417	0.667	
5	750	0.20	0.169	0.293	0.307	0.333	0.533	
			TT	TT	TT	TT	TT	
6	900	0.20	0.141	0.244	0.256	0.278	0.444	
8	1200	0.10	0.106	0.183	0.192	0.208	0.333	
10	1500	0.10	0.085	0.147	0.153	0.167	0.267	
12	1800	0.10	0.071	0.122	0.128	0.139	0.222	
			TN	TN	TN	TN	TN	Line
Ir = 125A	750	5.000	0.169	0.293	0.307	0.333	0.533	mode

Breaker FE250 with SMR1 type trip unit In= 160A, Ir =160A(1)
Disconnection time ≤ 1 sec. (TT) or 5 sec. (TN)

Short time setting Ist (x Ir)	I_a current (A)	Max. time (s)	Z_S value in Ω at a U_0 in Volts a.c. of					
			127	220	230	250	400	
			TT&TN	TT&TN	TT&TN	TT&TN	TT&TN	
2	384	0.13	0.331	0.573	0.599	0.651	1.042	
2.5	480	0.13	0.265	0.458	0.479	0.521	0.833	
3	576	0.13	0.220	0.382	0.399	0.434	0.694	
4	768	0.13	0.165	0.286	0.299	0.326	0.521	
			TT	TT	TT	TT	TT	
5	960	0.12	0.132	0.229	0.240	0.260	0.417	
6	1152	0.12	0.110	0.191	0.200	0.217	0.347	
8	1536	0.10	0.083	0.143	0.150	0.163	0.260	
10	1920	0.10	0.066	0.115	0.120	0.130	0.208	
12	2304	0.10	0.055	0.095	0.100	0.109	0.174	
			TN	TN	TN	TN	TN	Line
Ir = 160A	960	5.000	0.132	0.229	0.240	0.260	0.417	mode

Breaker FE250 or FG400 with SMR1 type trip unit In = 250A, Ir = 250A(1)
Disconnection time ≤ 1 sec. (TT) or 5 sec. (TN)

Short time setting Ist (x Ir)	I_a current (A)	Max. time (s)	Z_S value in Ω at a U_0 in Volts a.c. of					
			127	220	230	250	400	
			TT&TN	TT&TN	TT&TN	TT&TN	TT&TN	
2	600	0.18	0.212	0.367	0.383	0.417	0.667	
2.5	750	0.18	0.169	0.293	0.307	0.333	0.533	
3	900	0.18	0.141	0.244	0.256	0.278	0.444	
4	1200	0.18	0.106	0.183	0.192	0.208	0.333	
			TT	TT	TT	TT	TT	
5	1500	0.15	0.085	0.147	0.153	0.167	0.267	
6	1800	0.15	0.071	0.122	0.128	0.139	0.222	
8	2400	0.13	0.053	0.092	0.096	0.104	0.167	
10	3000	0.13	0.042	0.073	0.077	0.083	0.133	
12	3600	0.13	0.035	0.061	0.064	0.069	0.111	
			TN	TN	TN	TN	TN	Line
Ir = 250A	1500	5.000	0.085	0.147	0.153	0.167	0.267	mode

Breaker FG400 with SMR1 type trip unit In = 400A, Ir = 400A(1)
Disconnection time ≤ 1 sec. (TT) or 5 sec. (TN)

Short time setting Ist (x Ir)	I_a current (A)	Max. time (s)	Z_S value in Ω at a U_0 in Volts a.c. of					
			127	220	230	250	400	
			TT&TN	TT&TN	TT&TN	TT&TN	TT&TN	
2	960	0.18	0.132	0.229	0.240	0.260	0.417	
2.5	1200	0.18	0.106	0.183	0.192	0.208	0.333	
3	1440	0.18	0.088	0.153	0.160	0.174	0.278	
4	1920	0.18	0.066	0.115	0.120	0.130	0.208	
			TT	TT	TT	TT	TT	
5	2400	0.15	0.053	0.092	0.096	0.104	0.167	
6	2880	0.15	0.044	0.076	0.080	0.087	0.139	
8	3840	0.13	0.033	0.057	0.060	0.065	0.104	
10	4800	0.13	0.026	0.046	0.048	0.052	0.083	
12	5760	0.13	0.022	0.038	0.040	0.043	0.069	
			TN	TN	TN	TN	TN	Line
Ir = 400A	2400	5.000	0.053	0.092	0.096	0.104	0.167	mode

Breaker FG630 with SMR1 type trip unit In = 630A, Ir = 630A(1)
Disconnection time ≤ 1 sec. (TT) or 5 sec. (TN)

Short time setting Ist (x Ir)	I_a current (A)	Max. time (s)	Z_S value in Ω at a U_0 in Volts a.c. of					
			127	220	230	250	400	
			TT&TN	TT&TN	TT&TN	TT&TN	TT&TN	
2	1512	0.20	0.084	0.146	0.152	0.165	0.265	
2.5	1890	0.20	0.067	0.116	0.122	0.132	0.212	
3	2268	0.20	0.056	0.097	0.101	0.110	0.176	
4	3024	0.20	0.042	0.073	0.076	0.083	0.132	
			TT	TT	TT	TT	TT	
5	3780	0.19	0.034	0.058	0.061	0.066	0.106	
6	4536	0.19	0.028	0.049	0.051	0.055	0.088	
8	6048	0.15	0.021	0.036	0.038	0.041	0.066	
10	7623	0.03	0.017	0.029	0.030	0.033	0.052	
			TN	TN	TN	TN	TN	Line
Ir = 630A	3780	5.000	0.034	0.058	0.061	0.066	0.106	mode

Breakers meeting IEC 60364-4-41 clause 411 and table 41.1

Breaker FG400 with SMR2 type trip unit In = 400A, Ir = 250A[1]
Disconnection time ≤ 1 sec. (TT) or 5 sec. (TN)

Short time setting Ist (x Ir)	I_a current (A)	Max. time (s)	Z_S value in Ω at a U_0 in Volts a.c. of					
			127	220	230	250	400	
			TT&TN	TT&TN	TT&TN	TT&TN	TT&TN	
2	600	0.50	0.212	0.367	0.383	0.417	0.667	
2.5	750	0.50	0.169	0.293	0.307	0.333	0.533	
3	900	0.50	0.141	0.244	0.256	0.278	0.444	
			TT	TT	TT	TT	TT	
4	1200	0.50	0.106	0.183	0.192	0.208	0.333	
5	1500	0.50	0.085	0.147	0.153	0.167	0.267	
6	1800	0.50	0.071	0.122	0.128	0.139	0.222	
8	2400	0.50	0.053	0.092	0.096	0.104	0.167	
10	3000	0.50	0.042	0.073	0.077	0.083	0.133	
12	3600	0.50	0.035	0.061	0.064	0.069	0.111	
			TN	TN	TN	TN	TN	
Ir = 250A	900	5.000	0.141	0.244	0.256	0.278	0.444	Class 1.25
	1350	5.000	0.094	0.163	0.170	0.185	0.296	Class 2.5
	1800	5.000	0.071	0.122	0.128	0.139	0.222	Class 5

Breaker FG400 with SMR2 type trip unit In = 400A, Ir = 400A[1]
Disconnection time ≤ 1 sec. (TT) or 5 sec. (TN)

Short time setting Ist (x Ir)	I_a current (A)	Max. time (s)	Z_S value in Ω at a U_0 in Volts a.c. of					
			127	220	230	250	400	
			TT&TN	TT&TN	TT&TN	TT&TN	TT&TN	
2	960	0.50	0.132	0.229	0.240	0.260	0.417	
2.5	1200	0.50	0.106	0.183	0.192	0.208	0.333	
3	1440	0.50	0.088	0.153	0.160	0.174	0.278	
			TT	TT	TT	TT	TT	
4	1920	0.50	0.066	0.115	0.120	0.130	0.208	
5	2400	0.50	0.053	0.092	0.096	0.104	0.167	
6	2880	0.50	0.044	0.076	0.080	0.087	0.139	
8	3840	0.50	0.033	0.057	0.060	0.065	0.104	
10	4800	0.50	0.026	0.046	0.048	0.052	0.083	
12	5760	0.50	0.022	0.038	0.040	0.043	0.069	
			TN	TN	TN	TN	TN	
Ir = 400A	1440	5.000	0.088	0.153	0.160	0.174	0.278	Class 1.25
	2160	5.000	0.059	0.102	0.106	0.116	0.185	Class 2.5
	2880	5.000	0.044	0.076	0.080	0.087	0.139	Class 5

Breaker FG630 with SMR2 type trip unit In = 630A, Ir = 630A[1]
Disconnection time ≤ 1 sec. (TT) or 5 sec. (TN)

Short time setting Ist (x Ir)	I_a current (A)	Max. time (s)	Z_S value in Ω at a U_0 in Volts a.c. of					
			127	220	230	250	400	
			TT&TN	TT&TN	TT&TN	TT&TN	TT&TN	
2	1512	0.50	0.084	0.146	0.152	0.165	0.265	
2.5	1890	0.50	0.067	0.116	0.122	0.132	0.212	
3	2268	0.50	0.056	0.097	0.101	0.110	0.176	
			TT	TT	TT	TT	TT	
4	3024	0.50	0.042	0.073	0.076	0.083	0.132	
5	3780	0.50	0.034	0.058	0.061	0.066	0.106	
6	4536	0.50	0.028	0.049	0.051	0.055	0.088	
8	6048	0.50	0.021	0.036	0.038	0.041	0.066	
10	7560	0.50	0.017	0.029	0.030	0.033	0.053	
12	9072	0.50	0.014	0.024	0.025	0.028	0.044	
			TN	TN	TN	TN	TN	
Ir = 630A	2268	5.000	0.056	0.097	0.101	0.110	0.176	Class 1.25
	3402	5.000	0.037	0.065	0.068	0.073	0.118	Class 2.5
	4536	5.000	0.028	0.049	0.051	0.055	0.088	Class 5

Breaker FK800 with SMR1e or 1s type trip unit In = 800A, Ir = 800A[1]
Disconnection time ≤ 1 sec. (TT) or 5 sec. (TN)

Short time setting Ist (x Ir)	I_a current (A)	Max. time (s)	Z_S value in Ω at a U_0 in Volts a.c. of					
			127	220	230	250	400	
			TT&TN	TT&TN	TT&TN	TT&TN	TT&TN	
1.5	1440	0.40	0.088	0.153	0.160	0.174	0.278	
2	1920	0.40	0.066	0.115	0.120	0.130	0.208	
2.5	2400	0.40	0.053	0.092	0.096	0.104	0.167	
3	2880	0.40	0.044	0.076	0.080	0.087	0.139	
4	3840	0.40	0.033	0.057	0.060	0.065	0.104	
5	4800	0.40	0.026	0.046	0.048	0.052	0.083	
6	5760	0.40	0.022	0.038	0.040	0.043	0.069	
			TT	TT	TT	TT	TT	
8	7680	0.40	0.017	0.029	0.030	0.033	0.052	
10	9600	0.40	0.013	0.023	0.024	0.026	0.042	
			TN	TN	TN	TN	TN	
Ir = 800A	5760	5.000	0.022	0.038	0.040	0.043	0.069	SMR1e
	5760	5.000	0.022	0.038	0.040	0.043	0.069	SMR1s class 5

Breaker FK1250 with SMR1e or 1s type trip unit In = 1000A, Ir = 1000A[1]
Disconnection time ≤ 1 sec. (TT) or 5 sec. (TN)

Short time setting Ist (x Ir)	I_a current (A)	Max. time (s)	Z_S value in Ω at a U_0 in Volts a.c. of					
			127	220	230	250	400	
			TT&TN	TT&TN	TT&TN	TT&TN	TT&TN	
1.5	1800	0.40	0.071	0.122	0.128	0.139	0.222	
2	2400	0.40	0.053	0.092	0.096	0.104	0.167	
2.5	3000	0.40	0.042	0.073	0.077	0.083	0.133	
3	3600	0.40	0.035	0.061	0.064	0.069	0.111	
4	4800	0.40	0.026	0.046	0.048	0.052	0.083	
5	6000	0.40	0.021	0.037	0.038	0.042	0.067	
6	7200	0.40	0.018	0.031	0.032	0.035	0.056	
			TT	TT	TT	TT	TT	
8	9600	0.40	0.013	0.023	0.024	0.026	0.042	
10	12000	0.40	0.011	0.018	0.019	0.021	0.033	
			TN	TN	TN	TN	TN	
Ir = 1000A	7200	5.000	0.018	0.031	0.032	0.035	0.056	SMR1e
	7200	5.000	0.018	0.031	0.032	0.035	0.056	SMR1s class 5

Breaker FK1250 with SMR1e or 1s type trip unit In = 1000A, Ir = 1000A[1]
Disconnection time ≤ 1 sec. (TT) or 5 sec. (TN)

Short time setting Ist (x Ir)	I_a current (A)	Max. time (s)	Z_S value in Ω at a U_0 in Volts a.c. of					
			127	220	230	250	400	
			TT&TN	TT&TN	TT&TN	TT&TN	TT&TN	
1.5	2250	0.40	0.056	0.098	0.102	0.111	0.178	
2	3000	0.40	0.042	0.073	0.077	0.083	0.133	
2.5	3750	0.40	0.034	0.059	0.061	0.067	0.107	
3	4500	0.40	0.028	0.049	0.051	0.056	0.089	
4	6000	0.40	0.021	0.037	0.038	0.042	0.067	
5	7500	0.40	0.017	0.029	0.031	0.033	0.053	
6	9000	0.40	0.014	0.024	0.026	0.028	0.044	
			TT	TT	TT	TT	TT	
8	12000	0.40	0.011	0.018	0.019	0.021	0.033	
10	15000	0.40	0.008	0.015	0.015	0.017	0.027	
			TN	TN	TN	TN	TN	
Ir = 1250A	9000	5.000	0.014	0.024	0.026	0.028	0.044	SMR1e
	9000	5.000	0.014	0.024	0.026	0.028	0.044	SMR1s class 5

Breaker FK1600 with SMR1e or 1s type trip unit In = 1600A, Ir = 1600A[1]
Disconnection time ≤ 1 sec. (TT) or 5 sec. (TN)

Short time setting Ist (x Ir)	I_a current (A)	Max. time (s)	Z_S value in Ω at a U_0 in Volts a.c. of					
			127	220	230	250	400	
			TT&TN	TT&TN	TT&TN	TT&TN	TT&TN	
1.5	2880	0.40	0.044	0.076	0.080	0.087	0.139	
2	3840	0.40	0.033	0.057	0.060	0.065	0.104	
2.5	4800	0.40	0.026	0.046	0.048	0.052	0.083	
3	5760	0.40	0.022	0.038	0.040	0.043	0.069	
4	7680	0.40	0.017	0.029	0.030	0.033	0.052	
5	9600	0.40	0.013	0.023	0.024	0.026	0.042	
6	11520	0.40	0.011	0.019	0.020	0.022	0.035	
			TT	TT	TT	TT	TT	
8	15360	0.40	0.008	0.014	0.015	0.016	0.026	
10	19200	0.40	0.007	0.011	0.012	0.013	0.021	
			TN	TN	TN	TN	TN	
Ir = 1600A	11520	5.000	0.011	0.019	0.020	0.022	0.035	SMR1e
	11520	5.000	0.011	0.019	0.020	0.022	0.035	SMR1s class 5

Multiplcation factors for Z_S values applicable for LT settings < Ir.

	For Rating Plugs; Ie = 0.64 x breaker In							
Setting x Ie	0.625	0.650	0.675	0.700	0.725	0.750	0.775	0.800
Factor for Z_S	2.50	2.40	2.31	2.23	2.16	2.08	2.02	1.95
Setting x Ie	0.825	0.850	0.875	0.900	0.925	0.950	0.975	1.000
Factor for Z_S	1.89	1.84	1.79	1.74	1.69	1.64	1.60	1.56
	For Rating Plugs; Ie = 1 x breaker In							
Setting x In	0.625	0.650	0.675	0.700	0.725	0.750	0.775	0.800
Factor for Z_S	1.60	1.54	1.48	1.43	1.38	1.33	1.29	1.25
Setting x Ir	0.825	0.850	0.875	0.900	0.925	0.950	0.975	1.000
Factor for Z_S	1.21	1.18	1.14	1.11	1.08	1.05	1.03	1.00
	FK frame types with trip units types SMR1e, s & g							
Setting x In	0.40	0.50	0.60	0.70	0.80	0.90	0.95	1.00
Factor for Z_S	2.50	2.00	1.67	1.43	1.25	1.11	1.05	1.00

Disconnection times, current levels and calculated Z_S & Z'_S values for Record Plus Circuit Breakers meeting IEC 60364-4-41 clause 411 and table 41.1

Breaker FG400 with SMR2 type trip unit In = 250A with Groundfault sum. Disconnection time ≤ 1 sec. (TT & TN)

GF sum setting (Id) (x In)	I_a current (A)	Max. time (s)	Z_S value in Ω at a U_0 in Volts a.c. of				
			127	220	230	250	400
			TT&TN	TT&TN	TT&TN	TT&TN	TT&TN
0.2	60	0.50	2.117	3.667	3.833	4.167	6.667
0.25	75	0.50	1.693	2.933	3.067	3.333	5.333
0.3	90	0.50	1.411	2.444	2.556	2.778	4.444
0.4	120	0.50	1.058	1.833	1.917	2.083	3.333
0.5	150	0.50	0.847	1.467	1.533	1.667	2.667
0.6	180	0.50	0.706	1.222	1.278	1.389	2.222
0.7	210	0.50	0.605	1.048	1.095	1.190	1.905
0.8	240	0.50	0.529	0.917	0.958	1.042	1.667

Breaker FG400 & FG630 with SMR2 type trip unit In = 400A with Groundfault sum. Disconnection time ≤ 1 sec. (TT & TN)

GF sum setting (Id) (x In)	I_a current (A)	Max. time (s)	Z_S value in Ω at a U_0 in Volts a.c. of				
			127	220	230	250	400
			TT&TN	TT&TN	TT&TN	TT&TN	TT&TN
0.2	96	0.50	1.323	2.292	2.396	2.604	4.167
0.25	120	0.50	1.058	1.833	1.917	2.083	3.333
0.3	144	0.50	0.882	1.528	1.597	1.736	2.778
0.4	192	0.50	0.661	1.146	1.198	1.302	2.083
0.5	240	0.50	0.529	0.917	0.958	1.042	1.667
0.6	288	0.50	0.441	0.764	0.799	0.868	1.389
0.7	336	0.50	0.378	0.655	0.685	0.744	1.190
0.8	384	0.50	0.331	0.573	0.599	0.651	1.042

Breaker FG630 with SMR2 type trip unit In = 630A with Groundfault sum. Disconnection time ≤ 1 sec. (TT & TN)

GF sum setting (Id) (x In)	I_a current (A)	Max. time (s)	Z_S value in Ω at a U_0 in Volts a.c. of				
			127	220	230	250	400
			TT&TN	TT&TN	TT&TN	TT&TN	TT&TN
0.2	151	0.50	0.840	1.455	1.521	1.653	2.646
0.25	189	0.50	0.672	1.164	1.217	1.323	2.116
0.3	227	0.50	0.560	0.970	1.014	1.102	1.764
0.4	302	0.50	0.420	0.728	0.761	0.827	1.323
0.5	378	0.50	0.336	0.582	0.608	0.661	1.058
0.6	454	0.50	0.280	0.485	0.507	0.551	0.882
0.7	529	0.50	0.240	0.416	0.435	0.472	0.756
0.8	605	0.50	0.210	0.364	0.380	0.413	0.661

Breaker FG630 with SMR2 type trip unit In = 630A with Groundfault sum. Disconnection time ≤ 1 sec. (TT & TN)

GF sum setting (Id) (x In)	I_a current (A)	Max. time (s)	Z_S value in Ω at a U_0 in Volts a.c. of				
			127	220	230	250	400
			TT&TN	TT&TN	TT&TN	TT&TN	TT&TN
0.2	96	0.50	1.323	2.292	2.396	2.604	4.167
0.25	120	0.50	1.058	1.833	1.917	2.083	3.333
0.3	144	0.50	0.882	1.528	1.597	1.736	2.778
0.4	192	0.50	0.661	1.146	1.198	1.302	2.083
0.5	240	0.50	0.529	0.917	0.958	1.042	1.667
0.6	288	0.50	0.441	0.764	0.799	0.868	1.389
0.7	336	0.50	0.378	0.655	0.685	0.744	1.190
0.8	384	0.50	0.331	0.573	0.599	0.651	1.042

Breaker FK800 with SMR2 type trip unit In = 800A with Groundfault sum. Disconnection time ≤ 1 sec. (TT & TN)

GF sum setting (Id) (x In)	I_a current (A)	Max. time (s)	Z_S value in Ω at a U_0 in Volts a.c. of				
			127	220	230	250	400
			TT&TN	TT&TN	TT&TN	TT&TN	TT&TN
0.2	192	0.60	0.661	1.146	1.198	1.302	2.083
0.3	288	0.60	0.441	0.764	0.799	0.868	1.389
0.4	384	0.60	0.331	0.573	0.599	0.651	1.042
0.5	480	0.60	0.265	0.458	0.479	0.521	0.833
0.6	576	0.60	0.220	0.382	0.399	0.434	0.694
0.6	576	0.60	0.220	0.382	0.399	0.434	0.694
0.8	768	0.60	0.165	0.286	0.299	0.326	0.521
1.0	960	0.60	0.132	0.229	0.240	0.260	0.417

Breaker FK1250 with SMR2 type trip unit In = 1000A with Groundfault sum. Disconnection time ≤ 1 sec. (TT & TN)

GF sum setting (Id) (x In)	I_a current (A)	Max. time (s)	Z_S value in Ω at a U_0 in Volts a.c. of				
			127	220	230	250	400
			TT&TN	TT&TN	TT&TN	TT&TN	TT&TN
0.2	240	0.60	0.529	0.917	0.958	1.042	1.667
0.3	360	0.60	0.353	0.611	0.639	0.694	1.111
0.4	480	0.60	0.265	0.458	0.479	0.521	0.833
0.5	600	0.60	0.212	0.367	0.383	0.417	0.667
0.6	720	0.60	0.176	0.306	0.319	0.347	0.556
0.6	720	0.60	0.176	0.306	0.319	0.347	0.556
0.8	960	0.60	0.132	0.229	0.240	0.260	0.417
1.0	1200	0.60	0.106	0.183	0.192	0.208	0.333

Breaker FK1250 with SMR2 type trip unit In = 1250A with Groundfault sum. Disconnection time ≤ 1 sec. (TT & TN)

GF sum setting (Id) (x In)	I_a current (A)	Max. time (s)	Z_S value in Ω at a U_0 in Volts a.c. of				
			127	220	230	250	400
			TT&TN	TT&TN	TT&TN	TT&TN	TT&TN
0.2	300	0.60	0.423	0.733	0.767	0.833	1.333
0.3	450	0.60	0.282	0.489	0.511	0.556	0.889
0.4	600	0.60	0.212	0.367	0.383	0.417	0.667
0.5	750	0.60	0.169	0.293	0.307	0.333	0.533
0.6	900	0.60	0.141	0.244	0.256	0.278	0.444
0.6	900	0.60	0.141	0.244	0.256	0.278	0.444
0.8	1200	0.60	0.106	0.183	0.192	0.208	0.333
1.0	1500	0.60	0.085	0.147	0.153	0.167	0.267

Breaker Fk1600 with SMR2 type trip unit In = 1600A with Groundfault sum. Disconnection time ≤ 1 sec. (TT & TN)

GF sum setting (Id) (x In)	I_a current (A)	Max. time (s)	Z_S value in Ω at a U_0 in Volts a.c. of				
			127	220	230	250	400
			TT&TN	TT&TN	TT&TN	TT&TN	TT&TN
0.2	384	0.60	0.331	0.573	0.599	0.651	1.042
0.3	576	0.60	0.220	0.382	0.399	0.434	0.694
0.4	768	0.60	0.165	0.286	0.299	0.326	0.521
0.5	960	0.60	0.132	0.229	0.240	0.260	0.417
0.6	1152	0.60	0.110	0.191	0.200	0.217	0.347
0.6	1152	0.60	0.110	0.191	0.200	0.217	0.347
0.8	1536	0.60	0.083	0.143	0.150	0.163	0.260
1.0	1920	0.60	0.066	0.115	0.120	0.130	0.208

Notes

Selectivity/Discrimination

Fig. 1 depicts a typical distribution network. Here outgoing circuits are designed for the current load and the characteristics of the equipment within the circuit. Outgoing circuits that protect a certain area are placed together in panels or form groups within panels.
Typically this group of circuits is protected by a second, similar device, the characteristics of which are determined in the same manner. This system can be extended to a multiple level distribution network.
In case of a fault it is necessary that the device nearest to the fault reacts while all others remain closed.
This capability is called discrimination (UK) or selectivity (USA and Europe). If this requirement is not met, a fault (F) in one arm of the distribution system will cause a number of upstream protection devices wired in series to trip. Thus a minor fault in a socket outlet of a circuit can cause whole floors, buildings or building complexes to be cut off from the power supply.

Record Plus™ breakers are specifically designed to discriminate. By introducing ***Record Plus™***. GE sets a new standard in circuit breakers by offering total selectivity for all normally proportioned distribution systems.

EN 60947-2 amendment 1, app. A defines under "Coordination" that discrimination/selectivity may be partial up to a pre-defined current limit (Is).
Discrimination is considered total when the current limit is equal to the rated short-circuit breaking capacity (Icu or Ics) of the downstream device.
Discrimination/Selectivity is determined by comparing the time it takes an upstream device to react at a specific current value and - again - comparing this to the time it takes a downstream device to clear the fault at the same current level. (see Fig. 2) The comparison of these two time spans can be used to define whether discrimination is present or not.
We have simplified this comparison by applying a multiplication factor between downstream and upstream devices. With the values indicated in the table we can guarantee discrimination.
(see page E.15)

Selectivity Plus

Record Plus™ circuit breakers limit the electrical energy and peak current of a short-circuit event extremely effectively and limit the time span involved to the utter minimum.
The downstream breaker limits the magnitude of the fault so effectivley that the upstream, time delayed, Record Plus breaker is only exposed to a relativley low level short-circuit current that does not trip the breaker.
Fig.3 depicts this three dimensional selectivity technique that allows for the selective interruption of a short-circuit event making use of all the events' parameters **Current**, **Energy** and **Time**.

Fig. 1

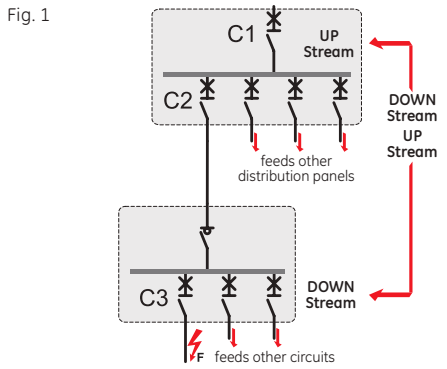

ON fault "F": C3 reacts only: 1 circuit without power
C2 + C3 react: Multiple circuits without power
C1 + C2 + C3 react: Multiple panels containing Multiple circuits without power

Fig. 2

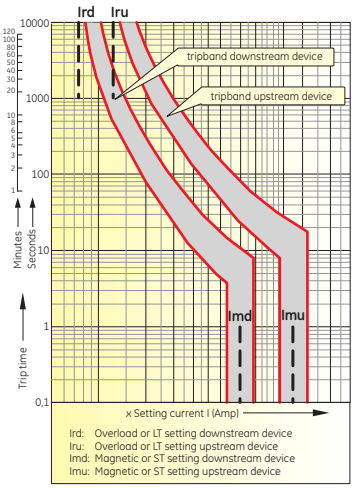

Fig. 3

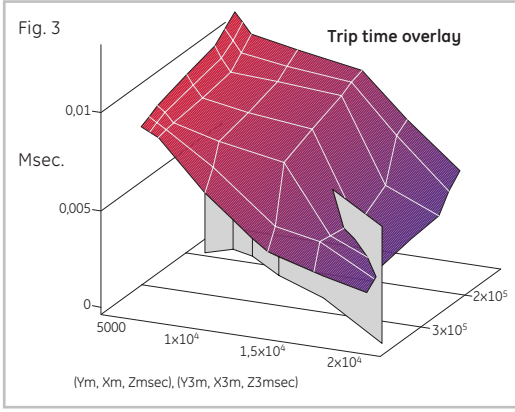

How to determine discrimination/ selectivity with Record Plus™ (and associated devices)

Table D1 to D5 (page E.18 to E.21) indicate the discrimination levels that can be achieved with ***Record Plus™*** and associated devices. Where discrimination is partial the selectivity limits in kA (Is) are mentioned in kA.
Where a "T" is found in the tables, this indicates total discrimination up to the highest breaking capacity of the devices at a voltage of 400/415V.
These discrimination/selectivity limits are only valid if the ratio between the current settings, ratings or time settings of the upstream and downstream breaker are equal or higher than the factor indicated here.

Selectivity/Discrimination

Downstream device		Upstream device		
		Record Plus™ MCCB		
		LTM or LTMD	**SMR1, 1e, 1s or 1g**	**SMR2**
Redline & Hti MCB	B, C & D curve	**Ir** factor 1.6 **Im** factor 2	**Ir** factor 2 **Ist** factor 1.5	**Ir** factor * 1.6 **Ist** factor 1.5
Surion Manual Motor Starter	Thermal mag or Mag. Only	**Ir** factor 3 **Im** factor 3	**Ir** factor 2 **Ist** factor 1.5	**Ir** factor * 1.6 **Ist** factor 1.5
Record Plus™ **MCCB**	LTM or LTMD	**Ir** factor 1.6 **Im** factor 1.5	**Ir** factor 2 **Ist** factor 1.5	**Ir** factor * 1.6 **Ist** factor 1.5
	SMR1	**Ir** factor 1.6 **Im** factor 1.5	**Ir** factor 1.6 **Ist** factor 1.5	**Ir** factor * 1.6 **Ist** factor 1.5
			SMR1, 1e, 1s or 1g	**SMR2**
Record Plus™ **MCCB**	SMR1s SMR2		**Ir** factor 1.6 **LTD** set at one class higher **Ist** factor 1.5 **STD** Set at one band higher	**Ir** factor 1.6 **LTD** set at one class higher **IIst** factor 1.5 **STD** Set at one band higher Inst. factor 1.5 **A^2S** Set at one band higher
		EntelliGuard™ Power Circuit Breaker		
			GTU E, S N or H I "OFF"	**GTU E, S N or H I "ON"**
Record Plus™ **MCCB**	SMR1		**Ir** factor 1.5 **Ist** factor 1.4 **STD** timing 0.2	**Ir** factor 1.5 **LTD** Class 20 **Ist** factor 1.4 **STD** timing 0.2 **Iinst** set at (1)
Record Plus™ **MCCB**	SMR1s SMR2		**Ir** factor 1.5 **Ist** factor 1.4 **STD** Set at one band higher	**Ir** factor 1.5 **LTD** set at one class higher **Ist** factor 1.4 **STD** Set at one band higher **Iinst** set at (1)

* LTD set at class 20

Terminology		
LTM	**Thermal magnetic Trip Unit**	
	Ir = Overload setting	**Im** = Magnetic setting
LTMD	**Selective Thermal magnetic Trip Unit**	
	Ir = Overload setting	**Im** = Magnetic setting
Mag. Break™	**Magnetic Only Trip Unit**	
	Im = Magnetic setting	
SMR1 & SMR1e	**Selective Electronic Trip unit**	
	Ir = Setting on **LT** device	**Ist** = Setting on **ST** device
SMR1s, g and SMR2	**Enhanced Electronic Trip unit**	
MPRO 17, 20, 30 & 40	**Mpact Electronic Trip Units**	
	Ir = Setting on **LT** device	**Ist** = Setting on **ST** device
	LTD class, time setting at 7.2 x Ir	**STD** Delay setting on ST device **A^2S** Cropped short time device delay setting **Inst.** = Setting on I (**Instantaneous**) device

(1) 5kA - FD160
7kA - FE160
9kA - FE250
14kA - FG400
18kA - FG630

Table D1 - Selectivity/Discrimination

Upstream / Downstream	In(A)	*Record Plus*™ type																	
		FDC & FDE 160 LTM						FDS 160 LTMD						FDN, H & L 160 LTMD					
		40	50	63	80	100	125 160	40	50	63	80	100	125 160	40	50	63	80	100	125 160
		Selectivity limit in kA*																	
Redline	**≤16**	0.6	2.5	T	T	T	T	T	T	T	T	T	T	T	T	T	T	T	T
EPC 30	**20**	0.6	2.5	3	T	T	T	T	T	T	T	T	T	T	T	T	T	T	T
G30	**25**	-	0.8	1.2	T	T	T	1.6	3.5	T	T	T	T	1.6	3.5	T	T	T	T
B/C curve	**32**	-	-	1.2	3	T	T	-	-	T	T	T	T	-	-	T	T	T	T
	40	-	-	-	3	T	T	-	-	T	T	T	T	-	-	T	T	T	T
Redline	**≤16**	0.6	2.5	T	T	T	T	T	T	T	T	T	T	T	T	T	T	T	T
EPC 45	**20**	0.6	2.5	3	T	T	T	3.5	T	T	T	T	T	3.5	T	T	T	T	T
G45	**25**	-	0.8	1.2	T	T	T	1.6	3.5	T	T	T	T	1.6	3.5	T	T	T	T
B/C curve	**32**	-	-	1.2	3	T	T	-	-	T	T	T	T	-	-	T	T	T	T
	40	-	-	-	3	4	T	-	-	-	T	T	T	-	-	-	T	T	T
Redline	**≤16**	0.6	2.5	6	6	T	T	T	T	T	T	T	T	T	T	T	T	T	T
EPC 60	**20**	0.6	2.5	3	6	T	T	3.5	T	T	T	T	T	3.5	T	T	T	T	T
DME60	**25**	-	0.8	1.2	6	6	T	1.6	3.5	T	T	T	T	1.6	3.5	T	T	T	T
B/C curve	**32**	-	-	1.2	3	6	T	-	-	T	T	T	T	-	-	T	T	T	T
	40	-	-	-	3	4	6	-	-	-	T	T	T	-	-	-	T	T	T
Redline	**≤16**	0.6	2.5	6	6	T	T	T	T	T	T	T	T	T	T	T	T	T	T
DM & DMT60	**20**	0.6	2.5	3	6	8	T	3.5	T	T	T	T	T	3.5	T	T	T	T	T
DM & DMT100	**25**	-	0.8	1.2	6	6	T	1.6	3.5	T	T	T	T	1.6	3.5	T	T	T	T
B/C curve	**32**	-	-	1.2	3	6	8	-	-	10	T	T	T	-	-	10	T	T	T
	40	-	-	-	3	4	6	-	-	-	T	T	T	-	-	-	T	T	T
	50	-	-	-	1.2	1.5	6	-	-	-	3.5	T	T	-	-	-	3.5	T	T
	63	-	-	-	-	1.5	2	-	-	-	-	8	T	-	-	-	-	8	T
Redline	**≤16**	0.6	2.5	6	6	10	T	10	10	T	T	T	T	10	10	T	T	T	T
G60	**20**	0.6	2.5	3	6	8	T	3.5	10	T	T	T	T	3.5	10	T	T	T	T
DME100	**25**	-	0.8	1.2	6	6	T	1.6	3.5	T	T	T	T	1.6	3.5	T	T	T	T
B/C curve	**32**	-	-	1.2	3	6	8	-	-	10	10	T	T	-	-	10	10	T	T
	40	-	-	-	3	4	6	-	-	-	10	T	T	-	-	-	10	T	T
	50	-	-	-	1.2	1.5	6	-	-	-	3.5	10	T	-	-	-	3.5	10	T
	63	-	-	-	-	1.5	2	-	-	-	-	8	T	-	-	-	-	8	T
Redline	**≤16**	0.6	2.5	6	6	10	T	10	10	T	T	T	T	10	10	T	T	T	T
G100 & GT25	**20**	0.6	2.5	3	6	8	T	3.5	10	T	T	T	T	3.5	10	T	T	T	T
B/C curve	**25**	-	0.8	1.2	6	6	T	1.6	3.5	15	T	T	T	1.6	3.5	15	T	T	T
	32	-	-	1.2	3	6	8	-	-	10	10	T	T	-	-	10	10	T	T
	40	-	-	-	3	4	6	-	-	-	10	15	T	-	-	-	10	15	T
	50	-	-	-	1.2	1.5	6	-	-	-	3.5	10	T	-	-	-	3.5	10	T
	63	-	-	-	-	1.5	2	-	-	-	-	8	T	-	-	-	-	8	T
Redline	**80**	-	-	-	-	-	1.9	-	-	-	-	-	2.5	-	-	-	-	-	2.5
Series HTI C curve	**100**	-	-	-	-	-	1.9	-	-	-	-	-	2.5	-	-	-	-	-	2.5
Redline	**≤25**	-	0.8	0.9	1.2	1.5	1.9	-	1	1.2	15	15	15	-	1	1.2	15	15	15
Serie S90	**32**	-	-	0.9	1.2	1.5	1.9	-	-	1.2	15	15	15	-	-	1.2	15	15	15
	40	-	-	-	1.2	1.5	1.9	-	-	-	15	15	15	-	-	-	15	15	15
	50	-	-	-	1.2	1.5	1.9	-	-	-	15	15	15	-	-	-	15	15	15
	63	-	-	-	-	1.5	1.9	-	-	-	-	15	15	-	-	-	-	15	15
	80	-	-	-	-	-	1.9	-	-	-	-	-	15	-	-	-	-	-	15
	100	-	-	-	-	-	-	-	-	-	-	-	15	-	-	-	-	-	15
Surion	**≤20**	0.6	2.5	6	6	10	T	10	10	T	T	T	T	10	10	T	T	T	T
GPS1BS &	**25**	-	1	1.2	6	6	T	-	3.5	15	15	T	T	-	3.5	15	15	T	T
GPS1MS	**32**	-	-	1.2	3	6	10	-	-	6	6	T	T	-	-	6	6	T	T
GPS2BS &	**40**	-	-	-	3	4	6	-	-	-	6	T	T	-	-	-	6	T	T
GPS2MS	**50**	-	-	-	1.2	1.6	6	-	-	-	3.5	T	T	-	-	-	3.5	T	T
	63	-	-	-		1.6	2	-	-	-	-	8	T	-	-	-	-	8	T
Surion	**≤20**	T	T	T	T	T	T	T	T	T	T	T	T	T	T	T	T	T	T
GPS1BH &	**25**	-	2.5	15	15	T	T	-	3.5	T	T	T	T	-	3.5	T	T	T	T
GPS1MH	**32**	-	-	6	6	8	T	-	-	T	T	T	T	-	-	T	T	T	T
GPS2BH&	**40**	-	-	-	6	8	T	-	-	T	T	T	T	-	-	T	T	T	T
GPS2MH	**50**	-	-	-	-	6	T	-	-	-	3.5	T	T	-	-	-	3.5	T	T
	63	-	-	-	-	-	T	-	-	-	-	8	T	-	-	-	-	8	T
***Record Plus*™**	**≤25**	0.4	0.5	0.6	0.8	1	1.3	0.6	0.8	0.9	1.2	1.5	3.5	0.6	0.8	0.9	1.2	1.5	3.5
FD160E	**32**	-	0.5	0.6	0.8	1	1.3	-	0.8	0.9	1.2	1.5	3.5	-	0.8	0.9	1.2	1.5	3.5
LTM	**40**	-	-	-	0.8	1	1.3	-	-	-	1.2	1.5	3.5	-	-	-	1.2	1.5	3.5
	50	-	-	-	0.8	1	1.3	-	-	-	1.2	1.5	3.5	-	-	-	1.2	1.5	3.5
	63	-	-	-	-	1	1.3	-	-	-	-	1.5	3.5	-	-	-	-	1.5	3.5
	80	-	-	-	-	-	1.3	-	-	-	-	-	3.5	-	-	-	-	-	3.5

* Where T is mentioned Selectivity is full up until the Icu of the downstream device
Remark; For MCB's with D type Curve assume a C curve type with a one step higher rating.
E.G. Selectivity FD160 80Amp LTM with downstream C Curve 40A MCB = 3kA, for D curve 40A, take the value mentioned for 50A C curve, here 1.2kA

Table D2 - Selectivity/Discrimination

Upstream / Downstream	In (A)	*Record Plus*™ type																				
		FE160N, H & L - LTM					FE160N, H & L - LTMD			FE160N, H & L - SMR1			FE250V - LTM			FE250N, H & L - LTMD				FE250N, H & L - SMR1		
		63	80	100	125	160	100	125	160	63	125	160	160	200	250	125	160	200	250	125	160	250
		Selectivity limit in kA*																				
Redline	≤20	T	T	T	T	T	T	T	T	T	T	T	T	T	T	T	T	T	T	T	T	T
EPC 30 & G30	25	1.2	T	T	T	T	T	T	T	T	T	T	T	T	T	T	T	T	T	T	T	T
B/C curve	25	1.2	T	T	T	T	T	T	T	T	T	T	T	T	T	T	T	T	T	T	T	T
	40	-	3	4	T	T	T	T	T	-	T	T	T	T	T	T	T	T	T	T	T	T
Redline	≤20	6	T	T	T	T	T	T	T	T	T	T	T	T	T	T	T	T	T	T	T	T
EPC 45 & G45	25	1.2	T	T	T	T	T	T	T	T	T	T	T	T	T	T	T	T	T	T	T	T
B/C curve	32	1.2	3	6	T	T	T	T	T	T	T	T	T	T	T	T	T	T	T	T	T	T
	40	-	3	4	T	T	T	T	T	-	T	T	T	T	T	T	T	T	T	T	T	T
Redline	≤20	6	6	T	T	T	T	T	T	T	T	T	T	T	T	T	T	T	T	T	T	T
EPC 60 & DME60	25	1.2	6	6	T	T	T	T	T	T	T	T	T	T	T	T	T	T	T	T	T	T
B/C curve	32	1.2	3	6	T	T	T	T	T	T	T	T	T	T	T	T	T	T	T	T	T	T
	40	-	3	4	6	6	T	T	T	-	T	T	T	T	T	T	T	T	T	T	T	T
Redline	≤20	6	6	8	T	T	T	T	T	T	T	T	T	T	T	T	T	T	T	T	T	T
DM60 & DMT60	25	1.2	6	6	T	T	T	T	T	T	T	T	T	T	T	T	T	T	T	T	T	T
DM100 & DMT100	32	1.2	3	6	8	T	T	T	T	T	T	T	T	T	T	T	T	T	T	T	T	T
B/C curve	40	-	3	4	6	6	T	T	T	T	T	T	T	T	T	T	T	T	T	T	T	T
	50	-	-	1.5	6	6	T	T	T	-	T	T	T	T	T	T	T	T	T	T	T	T
	63	-	-	1.5	2	2	T	T	T	-	T	T	T	T	T	T	T	T	T	T	T	T
Redline	≤20	6	6	8	T	T	T	T	T	T	T	T	T	T	T	T	T	T	T	T	T	T
G60	25	1.2	6	6	T	T	T	T	T	T	T	T	T	T	T	T	T	T	T	T	T	T
DME100	32	1.2	3	6	8	T	T	T	T	T	T	T	T	T	T	T	T	T	T	T	T	T
B/C curve	40	-	3	4	6	6	T	T	T	T	T	T	T	T	T	T	T	T	T	T	T	T
	50	-	1.2	1.5	6	6	T	T	T	-	T	T	T	T	T	T	T	T	T	T	T	T
	63	-	-	1.5	2	2	T	T	T	-	T	T	T	T	T	T	T	T	T	T	T	T
Redline	≤20	6	6	8	T	T	T	T	T	T	T	T	T	T	T	T	T	T	T	T	T	T
GT100 & GT25	25	1.2	6	6	T	T	T	T	T	T	T	T	T	T	T	T	T	T	T	T	T	T
B/C curve	32	1.2	3	6	8	T	T	T	T	T	T	T	T	T	T	T	T	T	T	T	T	T
	40	-	3	4	6	6	T	T	T	T	T	T	T	T	T	T	T	T	T	T	T	T
	50	-	-	1.5	6	6	T	T	T	-	T	T	T	T	T	T	T	T	T	T	T	T
	63	-	-	1.5	2	2	T	T	T	-	T	T	T	T	T	T	T	T	T	T	T	T
Redline	80	-	-	1.5	2	2	-	T	T	-	T	T	1.9	2.5	3	T	T	T	T	T	T	T
Series HTI C curve	100	-	-	-	-	2	-	-	T	-	-	T	1.9	2.5	3	-	T	T	T	-	T	T
	125	-	-	-	-	-	-	-	-	-	-	-	-	-	3	-	T	T	T	-	T	T
Redline	≤40	-	1.2	1.5	1.9	1.9	T	T	T	T	T	T	1.9	2.5	3	T	T	T	T	T	T	T
Series S90	50	-	-	1.5	1.9	1.9	T	T	T	T	T	T	1.9	2.5	3	T	T	T	T	T	T	T
	63	-	-	-	1.9	1.9	-	T	T	-	T	T	1.9	2.5	3	T	T	T	T	T	T	T
	80	-	-	-	-	1.9	-	-	T	-	T	T	1.9	2.5	3	-	T	T	T	T	T	T
Surion	100	-	-	-	-	-	-	-	-	-	-	T	1.9	2.5	3	-	-	T	T	-	T	T
GPS1BS &	≤20	6	6	10	T	T	T	T	T	T	T	T	T	T	T	T	T	T	T	T	T	T
GPS1MS	25	1.2	6	6	T	T	T	T	T	T	T	T	T	T	T	T	T	T	T	T	T	T
GPS2BS &	32	1.2	3	6	10	10	T	T	T	T	T	T	10	T	T	T	T	T	T	T	T	T
GPS2MS	40	-	-	4	6	6	T	T	T	T	T	T	6	10	T	T	T	T	T	T	T	T
	50	-	-	1.6	6	6	T	T	T	-	T	T	6	6	10	T	T	T	T	T	T	T
Surion	63	-	-	-	2	2	-	T	T	-	T	T	2	6	6	T	T	T	T	T	T	T
GPS1BH &	≤20	T	T	T	T	T	T	T	T	T	T	T	T	T	T	T	T	T	T	T	T	T
GPS1MH	25	15	15	T	T	T	T	T	T	T	T	T	T	T	T	T	T	T	T	T	T	T
GPS2BH&	32	6	6	8	T	T	T	T	T	T	T	T	T	T	T	T	T	T	T	T	T	T
GPS2MH	40	-	6	8	T	T	T	T	T	T	T	T	T	T	T	T	T	T	T	T	T	T
	50	-	-	6	T	T	T	T	T	-	T	T	T	T	T	T	T	T	T	T	T	T
Record Plus™	63	-	-	-	T	T	-	T	T	-	T	T	T	T	T	T	T	T	T	T	T	T
FFD160E	≤40	-	0.8	1	1.2	1.6	T	T	T	T	T	T	1.6	2	2.5	T	T	T	T	T	T	T
LTM	50	-	-	1	1.2	1.6	T	T	T	-	T	T	1.6	2	2.5	T	T	T	T	T	T	T
	63	-	-	-	1.2	1.6	T	T	T	-	T	T	1.6	2	2.5	T	T	T	T	T	T	T
	80	-	-	-	1.2	1.6	-	T	T	-	-	T	1.6	2	2.5	-	T	T	T	T	T	T
	100	-	-	-	-	1.6	-	-	T	-	-	T	1.6	2	2.5	-	-	T	T	-	T	T
	125	-	-	-	-	-	-	-	-	-	-	-	-	2	2.5	-	-	T	T	-	-	T
	160	-	-	-	-	-	-	-	-	-	-	-	-	-	2.5	-	-	-	T	-	-	T
Record Plus™	≤40	0.6	0.8	1	1.2	1.6	30	30	30	36	36	36	1.6	2	2.5	42	42	42	42	50	50	50
FD160S, N	50	-	0.8	1	1.2	1.6	30	30	30	-	36	36	1.6	2	2.5	42	42	42	42	50	50	50
H & L	63	-	-	1	1.2	1.6	30	30	30	-	36	36	1.6	2	2.5	42	42	42	42	50	50	50
LTMD	80	-	-	-	1.2	1.6	-	30	30	-	36	36	1.6	2	2.5	42	42	42	42	50	50	50
	100	-	-	-	-	1.6	-	-	30	-	-	36	1.6	2	2.5	-	42	42	42	-	50	50
	125	-	-	-	-	-	-	-	-	-	-	-	-	2	2.5	-	-	42	42	-	-	50
	160	-	-	-	-	-	-	-	-	-	-	-	-	-	2.5	-	-	-	42	-	-	50
Record Plus™	≤40	0.6	0.8	1	1.2	1.6	30	30	30	36	36	36	1.6	2	2.5	42	42	42	42	50	50	50
FE160 N, H & L	50	-	0.8	1	1.2	1.6	30	30	30	-	36	36	1.6	2	2.5	42	42	42	42	50	50	50
LTM/MO/GTM	63	-	-	1	1.2	1.6	30	30	30	-	36	36	1.6	2	2.5	42	42	42	42	50	50	50
	80	-	-	-	1.2	1.6	-	30	30	-	36	36	1.6	2	2.5	42	42	42	42	50	50	50
	100	-	-	-	-	1.6	-	-	30	-	-	36	1.6	2	2.5	-	42	42	42	-	50	50
	125	-	-	-	-	-	-	-	-	-	-	-	-	2	2.5	-	-	42	42	-	-	50
	160	-	-	-	-	-	-	-	-	-	-	-	-	-	2.5	-	-	-	42	-	-	50

* Where T is mentioned Selectivity is full up until the Icu of the downstream device.

Table D3 - Selectivity/Discrimination

Upstream / Downstream	In (A)	*Record Plus*™ type															
		FE160N, H&L - SMR1			FE250N, H&L - LTMD				FE250N, H&L - SMR1			FG400, H&L - SMR1 & SMR2			FG630N, H&L - SMR1 & SMR2		
		63	125	160	125	160	200	250	125	160	250	250	350	400	400	500	630
		Selectivity limit in kA*															
Redline	**≤20**	T	T	T	T	T	T	T	T	T	T	T	T	T	T	T	T
EPC 30, 45 & 60N	**25**	T	T	T	T	T	T	T	T	T	T	T	T	T	T	T	T
G30, 45, 60 & 100	**32**	T	T	T	T	T	T	T	T	T	T	T	T	T	T	T	T
GT25, DME60	**40**	T	T	T	T	T	T	T	T	T	T	T	T	T	T	T	T
DM (T)60, &100	**50**	-	T	T	T	T	T	T	T	T	T	T	T	T	T	T	T
B/C curve	**63**	-	T	T	T	T	T	T	T	T	T	T	T	T	T	T	T
Redline	**80**	-	T	T	-	T	T	T	T	T	T	T	T	T	T	T	T
Series HTI C curve	**100**	-	-	T	-	T	T	T	-	T	T	T	T	T	T	T	T
	125	-	-	-	-	-	T	T	-	T	T	T	T	T	T	T	T
Redline	**≤40**	T	T	T	T	T	T	T	T	T	T	T	T	T	T	T	T
Series S90	**50**	-	T	T	T	T	T	T	T	T	T	T	T	T	T	T	T
	63	-	T	T	T	T	T	T	T	T	T	T	T	T	T	T	T
	80	-	T	T	-	T	T	T	T	T	T	T	T	T	T	T	T
	100	-	-	T	-	-	T	T	-	T	T	T	-	T	-	T	T
Surion	**≤40**	T	T	T	T	T	T	T	T	T	T	T	T	T	T	T	T
GPS1BS & GPS1MS	**50**	-	T	T	T	T	T	T	T	T	T	T	T	T	T	T	T
GP2BS & GPS2MS	**63**	-	T	T	T	T	T	T	T	T	T	T	T	T	T	T	T
Surion	**≤40**	T	T	T	T	T	T	T	T	T	T	T	T	T	T	T	T
GPS1BH & GPS1MH	**50**	-	T	T	T	T	T	T	T	T	T	T	T	T	T	T	T
GP2BH & GPS2MH	**63**	-	T	T	T	T	T	T	T	T	T	T	T	T	T	T	T
***Record Plus*™**	**≤40**	T	T	T	T	T	T	T	T	T	T	T	T	T	T	T	T
FD160 E	**50**	-	T	T	T	T	T	T	T	T	T	T	T	T	T	T	T
LTM	**63**	-	T	T	T	T	T	T	T	T	T	T	T	T	T	T	T
	80	-	-	T	-	T	T	T	T	T	T	T	T	T	T	T	T
	100	-	-	T	-	-	T	T	-	T	T	T	T	T	T	T	T
	125	-	-	-	-	-	T	T	-	-	T	T	T	T	T	T	T
	160	-	-	-	-	-	-	T	-	-	T	T	T	T	T	T	T
***Record Plus*™**	**≤40**	36	36	36	42	42	42	42	50	50	50	T	T	T	T	T	T
FD160 S, N, H & L	**50**	-	36	36	42	42	42	42	50	50	50	T	T	T	T	T	T
LTMD/MO/GTM	**63**	-	36	36	42	42	42	42	50	50	50	T	T	T	T	T	T
	80	-	-	36	42	42	42	42	50	50	50	T	T	T	T	T	T
	100	-	-	36	-	42	42	42	-	50	50	T	T	T	T	T	T
	125	-	-	-	-	-	42	42	-	-	50	T	T	T	T	T	T
	160	-	-	-	-	-	-	42	-	-	50	T	T	T	T	T	T
***Record Plus*™**	**≤40**	36	36	36	42	42	42	42	50	50	50	T	T	T	T	T	T
FE160 N, H & L	**50**	-	36	36	42	42	42	42	50	50	50	T	T	T	T	T	T
LTM/MO/GTM	**63**	-	36	36	42	42	42	42	50	50	50	T	T	T	T	T	T
	80	-	36	36	42	42	42	42	50	50	50	T	T	T	T	T	T
	100	-	-	36	-	42	42	42	-	50	50	T	T	T	T	T	T
	125	-	-	-	-	-	42	42	-	-	50	T	T	T	T	T	T
	160	-	-	-	-	-	-	42	-	-	50	T	T	T	T	T	T
***Record Plus*™**	**≤40**	0,8	1,8	2,2	1,3	1,6	2,5	2,5	1,8	2,2	3,5	T	T	T	T	T	T
FE160 N, H & L	**63**	-	1,8	2,2	1,3	1,6	2,5	2,5	1,8	2,2	3,5	T	T	T	T	T	T
LTMD/SMR1	**80**	-	1,8	2,2	1,3	1,6	2,5	2,5	1,8	2,2	3,5	T	T	T	T	T	T
	100	-	-	2,2	-	1,6	2,5	2,5	-	2,2	3,5	T	T	T	T	T	T
	125	-	-	-	-	-	2,5	2,5	-	-	3,5	T	T	T	T	T	T
	160	-	-	-	-	-	-	2,5	-	-	3,5	T	T	T	T	T	T
***Record Plus*™**	**125**	-	-	-	-	-	-	-	-	-	-	3,5	10	15	T	T	T
FE250 N, H & L	**160**	-	-	-	-	-	-	-	-	-	-	3,5	10	15	T	T	T
LTMD/SMR1	**200**	-	-	-	-	-	-	-	-	-	-	-	10	15	T	T	T
	250	-	-	-	-	-	-	-	-	-	-	-	10	15	T	T	T
***Record Plus*™**																	
FG400 N, H & L	**250**	-	-	-	-	-	-	-	-	-	-	-	5	6	5	7	7
SMR1/SMR2	**400**	-	-	-	-	-	-	-	-	-	-	-	-	-	-	-	7

Table D4 - Selectivity/Discrimination

Downstream \ Upstream		In (A)	*Record Plus*™ type			
			FK800N, H & L SMR1	FK1250N, H & L SMR1		FK1600N, H & L SMR1
			800	1000	1250	1600
			Selectivity limit in kA*			
Redline EPC 30, 45 & 60N / G30, 45, 60 & 100 / GT25 / DME60 DM(T)60, & 100	B/C curve	All	T	T	T	T
Redline Series HTI & S90	C curve	All	T	T	T	T
Surion GPS1BS, GPS1MS, GPS2BS, GPS2MS GPS1BH, GPS1MH, GPS2BH & GPS2MH		All	T	T	T	T
Record Plus™ FD160E, S, N, H & L types LTM/LTMD/MO/GTM		All	15	T	T	T
Record Plus™ FE160 N, H & L types LTM/LTMD/MO/GTM/SMR1	Trip Units	All	T	T	T	T
Record Plus™ FE250 V, N, H & L types LTM/LTMD/MO/GTM/SMR1	Trip Units	All	T	T	T	T
Record Plus™ FG400 N, H & L types SMR1/SMR2	Trip Units	All	T	T	T	T
Record Plus™ FG630 N, H & L types SMR1/SMR2	Trip Units	400A	15	T	T	T
		500A	15	T	T	T
		630A	15	T	T	T
Record Plus™ FK800 N, H & L types LTM/MO/SMR1e, s & g	Trip Units	All	-	15	15	25
Record Plus™ FK1250 N, H & L types LTM/MO/SMR1e, s & g	Trip Units	1000A	-	-	-	25
		1250A	-	-	-	25

* Where T is mentioned Selectivity is full up until the Icu of the downstream device

Table D5 - Selectivity/Discrimination

Downstream Device	Trip Unit	Upstream EntelliGuard™ G device and Selectivity limit Is [1]								
		GG04S to GG20S	GG04N to GG20N	GG25N to GG40N	GG04E to GG20E	GG(H)25H to GG(H)40H	GG(H)25M to GG(H)40M	GG32G to GG40G	GG40M to GG64M	GG40L to GG64L
Redline EPC 30, 45 & 60N / G30, 45, 60, 100 / GT25 / DME60 / DM(T)60, & 100 B/C curve	All	T	T	T	T	T	T	T	T	T
Redline Series HTI & S90 C curve	All	T	T	T	T	T	T	T	T	T
Surion Manual Motor starters GPS1BS & GPS1MS GP2BS & GPS2MS	All	T	T	T	T	T	T	T	T	T
Surion Manual Motor starters GPS1BH & GPS1MH GP2BH & GPS2MH	All	T	T	T	T	T	T	T	T	T
Record Plus™										
FD& FE frame C, E, V, S tiers	All	T	T	T	T	T	T	T	T	T
FD& FE frame N tier	All	T	T	T	T	T	T	T	T	T
FD& FE frame H tier	All	T	T	T	T	T	T	T	T	T
FD& FE frame L tier	All	T	T	T	T	T	T	T	T	T
FG frame N tier	All	T	T	T	T	T	T	T	T	T
FG frame H tier	All	T	T	T	T	T	T	T	T	T
FG frame L tier	All	T	T	T	T	T	T	T	T	T
FK frame N tier	All	T	T	T	T	T	T	T	T	T
FK frame H tier	All	T	T	T	T	T	T	T	T	T
FK frame L tier	All	T	T	T	T	T	T	T	T	T
EntelliGuard										
GG04S to GG20S	All	50kA [2]	T	T	T	T	T	T	T	T
GG04N to GG20N	All	50kA [2]	65kA [2]	65kA [2]	T	T	T	T	T	T
GG04E to GG20E	All	50kA [2]	65kA [2]	65kA [2]	85kA [2]	85kA [2]	85kA [2]	T	T	T
GG(H)25H to GG(H)40H	All	-	-	65kA [2]	-	85kA [2]	85kA [2]	T	T	T
GG(H)25M to GG(H)40M	All	-	-	65kA [2]	-	85kA [2]	85kA [2]	T	T	T
GG(H)40M to GG(H)64M	All	-	-	-	-	-	-	-	100kA [2]	100kA [2]
GG(H)40L to GG(H)64L	All	-	-	-	-	-	-	-	100kA [2]	100kA [2]
Industrial fuses [3] GL/Gg type	-	T	T	T	T	T	T	T	T	T

(1) T = Full selectivity until the Icu of the downstream or upstream device (the lowest of the two)
(2) Indicated values apply with I (Instantaneous) ON, If Off reduce by 10%
(3) Conditions for selectivity: Fuse rating = Breaker LT rating /2,: Other minimum breaker settings: LTDB: F20, ST = 8 x Ir, STDB band 5, Inst = 12 x Ie.

Back-up protection

One of the operational requirements for a protective device is that its rated short-circuit breaking capacity Icu or Ics is either equal or greater than the prospective short-circuit current at the point where it is installed. EN 60384 defines one exception to this in clause 434:

The upstream device must posses the necessary rated short-circuit breaking capacity at its point of installation. The upstream device must coordinate with the downstream device in a manner that will limit the energy and short-circuit values to levels that the downstream device can handle.

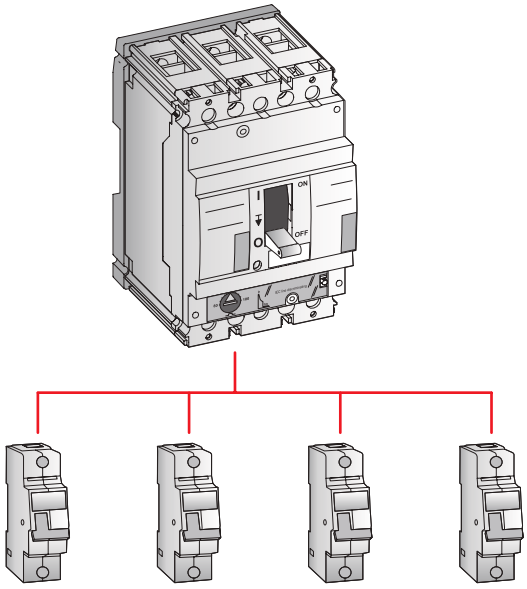

Use of current limitation

Installing an upstream device that limits the prospective short-circuit values will enable the user to place a downstream device with a lower breaking capacity. The coordination between the two devices allows excellent breaking capacity at a low cost.

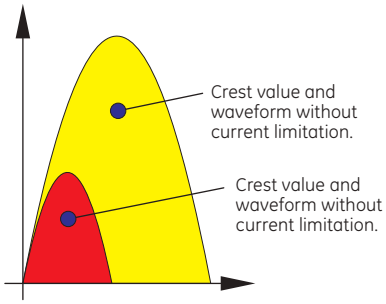

Effect of a current limiting device on a short-circuit in an AC network.

Record Plus™

The ***Record Plus™*** rotating dual contact configuration limits the energy and current values of prospective faults to extremely low values. This key design feature allows the use of cost-effective downstream devices while maintaining overall system protection.
Back-up protection is inherently „unselective" or „non-discriminating". That means that the upstream device must react first in order to protect the downstream device. However, the ***Record Plus™*** devices are so current limiting that the current and energy values present in the circuit do not trip the upstream breaker. Please refer to the details on „Selectivity Plus" for a description of this technique.

The tables B1 and B2 are in complete accordance with the EN 60947-2 requirements and have been verified through experiment where necessary. They provide data for the ***Record Plus™*** breaker and the other GE Industrial Systems product lines.
The values are only applicable for the devices mentioned.

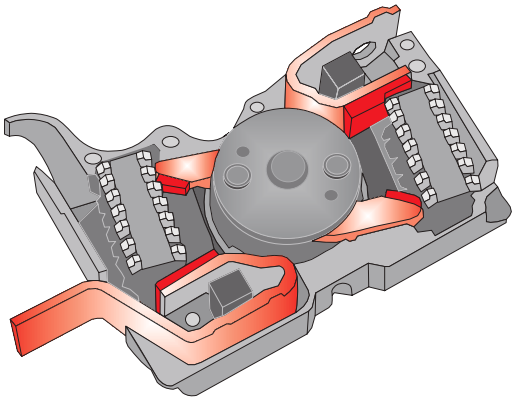

Table B1 - Back-up protection at 230/240V

Upstream / Downstream	Icu (kA)	*Record Plus*™ type																										
		FD160C	FD160E	FD160S	FD160N	FD160H	FD160L	FE160N	FE160H	FE160L	FE250V	FE250N	FE250H	FE250L	FG400N	FG400H	FG400L	FG630N	FG630H	FG630L	FK800N	FK800H	FK800L	FK1250N	FK1250H	FK1250L	FK1600N	FK1600H
		25	40	50	85	100	200	85	100	200	65	85	100	200	90	100	200	90	100	200	85	100	170	85	100	170	85	100
		Icu of the combination in kA																										
Redline																												
EPC30	**3**	15	15	15	15	15	15	12	12	12	10	10	10	10	-	-	-	-	-	-	-	-	-	-	-	-	-	-
EPC451N / EPC45	**6**	15	18	18	18	18	18	15	15	15	12	12	12	12	-	-	-	-	-	-	-	-	-	-	-	-	-	-
DME60	**6**	15	18	22	22	22	22	18	18	18	15	15	15	15	-	-	-	-	-	-	-	-	-	-	-	-	-	-
EPC61N / EPC60	**7.5**	16	20	23	23	23	23	20	20	20	16	16	16	16	-	-	-	-	-	-	-	-	-	-	-	-	-	-
DM60 & DMT60	**10**	22	25	30	36	85	85	36	85	85	30	36	65	65	16	16	16	14	14	14	-	-	-	-	-	-	-	-
DME100	**10**	18	22	25	25	25	25	22	22	22	18	18	18	18														
DM100 & DMT100	**15**	25	36	42	50	100	100	42	100	100	30	36	65	65	18	18	18	16	16	16								
G30	**15**	25	36	42	50	100	100	42	100	100	30	36	65	65	18	18	18	16	16	16								
G45	**10**	22	25	30	36	85	85	36	85	85	30	36	65	65	16	16	16	14	14	14	-	-	-	-	-	-	-	-
G60	**20**	25	36	42	50	100	100	50	100	100	36	42	85	85	22	22	22	18	18	18	-	-	-	-	-	-	-	-
G100	**30**	-	42	50	65	100	100	65	100	100	42	50	85	85	-	-	-	-	-	-	-	-	-	-	-	-	-	-
GT25 ≤25A	**50**	-	-	-	65	100	100	65	100	100	-	65	100	100	-	-	-	-	-	-	-	-	-	-	-	-	-	-
GT25 32 & 40A	**40**	-	-	50	65	100	100	65	100	100	42	50	85	85	-	-	-	-	-	-	-	-	-	-	-	-	-	-
GT25 50 & 63A	**30**	-	42	50	65	100	100	65	100	100	42	50	85	85	-	-	-	-	-	-	-	-	-	-	-	-	-	-
Redline																												
Hti	**15**	22	36	42	50	100	100	50	100	100	36	42	80	80	-	-	-	-	-	-	-	-	-	-	-	-	-	-
Redline																												
S90	**25**	-	36	42	85	100	100	85	100	100	36	50	85	85	-	-	-	-	-	-	-	-	-	-	-	-	-	-
Surion																												
GPS1BS ≤16A	**100**	-	-	-	-	-	150	-	-	150	-	-	-	150	-	-	-	-	-	-	-	-	-	-	-	-	-	-
GPS1BS >16A	**50**	-	-	-	85	100	150	-	100	150	-	-	100	150	-	-	-	-	-	-	-	-	-	-	-	-	-	-
GPS1BH all	**100**	-	-	-	-	-	150	-	-	150	-	-	-	150	-	-	-	-	-	-	-	-	-	-	-	-	-	-
GPS2BS ≤16A	**100**	-	-	-	-	-	150	-	-	150	-	-	-	150	-	-	-	-	-	-	-	-	-	-	-	-	-	-
GPS2BS >16A	**50**	-	-	-	85	100	150	-	100	150	-	-	100	150	-	-	-	-	-	-	-	-	-	-	-	-	-	-
GPS2BH all	**100**	-	-	-	-	-	150	-	-	150	-	-	-	150	-	-	-	-	-	-	-	-	-	-	-	-	-	-
***Record Plus*™**																												
FD160C	**18**	-	30	36	42	50	65	42	50	65	36	42	50	65	42	50	65	42	50	65	-	-	-	-	-	-	-	-
FD160E	**36**	-	-	50	65	85	100	65	85	100	50	65	85	100	65	85	100	65	85	100	-	-	-	-	-	-	-	-
FD160S	**50**	-	-	-	-	85	100	-	85	100	-	-	85	100	-	85	100	-	85	100	-	-	-	-	-	-	-	-
FD160N	**85**	-	-	-	-	100	200	-	100	200	-	-	100	200	-	100	200	-	100	200	80	100	150	80	100	150	80	100
FD160H	**100**	-	-	-	-	-	200	-	-	200	-	-	-	200	-	-	200	-	-	200	-	100	150	-	100	150	-	100
FE160N	**85**	-	-	-	-	-	-	-	100	200	-	-	100	200	-	100	200	-	100	200	80	100	150	80	100	150	80	100
FE160H	**100**	-	-	-	-	-	-	-	-	200	-	-	-	200	-	-	200	-	-	200	-	100	150	-	100	150	-	100
FE250N	**85**	-	-	-	-	-	-	-	-	-	-	-	100	200	-	100	200	-	100	200	80	100	150	80	100	150	80	100
FE250H	**100**	-	-	-	-	-	-	-	-	-	-	-	-	200	-	-	200	-	-	200	-	100	150	-	100	150	-	100
FG400N	**85**	-	-	-	-	-	-	-	-	-	-	-	-	-	-	100	200	-	100	200	80	100	150	80	100	150	80	100
FG400H	**100**	-	-	-	-	-	-	-	-	-	-	-	-	-	-	-	200	-	-	200	-	100	150	-	100	150	-	100
FG630N	**85**	-	-	-	-	-	-	-	-	-	-	-	-	-	-	-	-	-	100	200	80	100	150	80	100	150	80	100
FG630H	**100**	-	-	-	-	-	-	-	-	-	-	-	-	-	-	-	-	-	-	200	-	100	150	-	100	150	-	100
FK800N	**80**	-	-	-	-	-	-	-	-	-	-	-	-	-	-	-	-	-	-	-	80	100	150	80	100	150	80	100
FK800H	**100**	-	-	-	-	-	-	-	-	-	-	-	-	-	-	-	-	-	-	-	-	100	170	-	100	170	-	100
FK1250N	**80**	-	-	-	-	-	-	-	-	-	-	-	-	-	-	-	-	-	-	-	80	100	170	80	100	170	80	100
FK1250H	**100**	-	-	-	-	-	-	-	-	-	-	-	-	-	-	-	-	-	-	-	-	100	170	-	100	170	-	100

Table B2 - Back-up protection at 400/415V

Upstream / Downstream	Icu (kA)	Record Plus™ type																										
		FD160C	FD160E	FD160S	FD160N	FD160H	FD160L	FE160N	FE160H	FE160L	FE250V	FE250N	FE250H	FE250L	FG400N	FG400H	FG400L	FG630N	FG630H	FG630L	FK800N	FK800H	FK800L	FK1250N	FK1250H	FK1250L	FK1600N	FK1600H
		18	25	36	50	80	150	50	80	150	36	50	80	150	50	80	150	50	80	150	50	80	100	50	80	100	50	80
		Icu of the combination in kA																										
Redline																												
EPC30	**5**	15	18	22	25	30	36	25	30	36	18	22	25	30	12	12	12	10	10	10	-	-	-	-	-	-	-	-
EPC452, 453 & 454	**6**	15	18	22	25	30	36	25	30	36	18	22	25	30	12	12	12	10	10	10	-	-	-	-	-	-	-	-
EPC62, 63 & 64	**7.5**	16	20	23	25	34	40	28	34	40	20	25	30	32	15	15	15	10	10	10	-	-	-	-	-	-	-	-
G32, 33 & 34	**3**	15	18	22	25	30	36	25	30	36	18	22	25	30	12	12	12	10	10	10	-	-	-	-	-	-	-	-
G452, 453 & 454	**5**	15	18	22	25	30	36	25	30	36	18	22	25	30	12	12	12	10	10	10	-	-	-	-	-	-	-	-
G60 & GT10	**10**	18	22	25	30	36	42	30	36	42	22	30	36	36	16	16	16	12	12	12	-	-	-	-	-	-	-	-
GT100	**15**	18	25	30	36	42	50	36	42	50	25	30	36	36	22	22	22	16	16	16	-	-	-	-	-	-	-	-
GT25 ≤25A	**25**	-	-	36	42	50	65	42	50	65	-	36	42	42	-	-	-	-	-	-	-	-	-	-	-	-	-	-
GT25 32 & 40A	**20**	-	-	30	36	42	50	36	42	50	-	36	42	42	-	-	-	-	-	-	-	-	-	-	-	-	-	-
GT25 50 & 63A	**15**	18	25	30	36	42	50	36	42	50	25	30	36	36	-	-	-	-	-	-	-	-	-	-	-	-	-	-
Redline																												
Series Hti	**10**	15	18	25	30	36	42	30	36	42	18	30	36	36	-	-	-	-	-	-	-	-	-	-	-	-	-	-
Redline																												
Series S90	**15**	18	25	30	36	42	50	36	42	50	25	36	42	42	-	-	-	-	-	-	-	-	-	-	-	-	-	-
Surion																												
GPS1BS ≤10A	**100**	-	-	-	-	-	150	-	-	150	-	-	-	150	-	-	-	-	-	-	-	-	-	-	-	-	-	-
GPS1B/MS 12.5A	**50**	-	-	-	-	80	150	-	80	150	-	-	80	150	-	-	-	-	-	-	-	-	-	-	-	-	-	-
GPS1B/MS ≥16A	**25**	-	-	-	42	50	65	42	50	65	-	42	50	65	-	-	-	-	-	-	-	-	-	-	-	-	-	-
GPS1B/MH ≤12.5A	**100**	-	-	-	-	-	150	-	-	150	-	-	-	150	-	-	-	-	-	-	-	-	-	-	-	-	-	-
GPS1B/MH >12.5A	**50**	-	-	-	-	80	150	-	80	150	-	-	80	150	-	-	-	-	-	-	-	-	-	-	-	-	-	-
GPS2B/MS 10A	**100**	-	-	-	-	-	150	-	-	150	-	-	-	150	-	-	-	-	-	-	-	-	-	-	-	-	-	-
GPS2B/MS >10A	**25**	-	-	-	42	50	65	42	50	65	-	42	50	65	-	-	-	-	-	-	-	-	-	-	-	-	-	-
GPS2B/MH 10A	**100**	-	-	-	-	-	150	-	-	150	-	-	-	150	-	-	-	-	-	-	-	-	-	-	-	-	-	-
GPS2B/MH >10A	**50**	-	-	-	-	80	150	-	80	150	-	-	80	150	-	-	-	-	-	-	-	-	-	-	-	-	-	-
***Record Plus*™**																												
FD160C	**18**	-	22	25	30	36	42	30	36	42	22	30	36	42	30	36	42	30	36	42	-	-	-	-	-	-	-	-
FD160E	**25**	-	-	30	36	42	50	36	42	50	-	36	42	50	36	42	50	36	42	50	-	-	-	-	-	-	-	-
FD160S	**36**	-	-	-	42	50	65	42	50	65	-	42	50	65	42	50	65	42	50	65	-	-	-	-	-	-	-	-
FD160N	**50**	-	-	-	-	80	150	-	80	150	-	-	80	150	-	80	150	-	80	150	-	80	100	-	80	100	-	80
FD160H	**80**	-	-	-	-	-	150	-	-	150	-	-	-	150	-	-	150	-	-	150	-	-	100	-	-	100	-	-
FE160N	**50**	-	-	-	-	-	-	-	80	150	-	-	80	150	-	80	150	-	80	150	-	80	100	-	80	100	-	80
FE160H	**80**	-	-	-	-	-	-	-	-	150	-	-	-	150	-	-	150	-	-	150	-	-	100	-	-	100	-	-
FE250N	**50**	-	-	-	-	-	-	-	-	-	-	-	80	150	-	80	150	-	80	150	-	80	100	-	80	100	-	80
FE250H	**80**	-	-	-	-	-	-	-	-	-	-	-	-	150	-	-	150	-	-	150	-	-	100	-	-	100	-	-
FG400N	**50**	-	-	-	-	-	-	-	-	-	-	-	-	-	-	80	150	-	80	150	-	80	100	-	80	100	-	80
FG400H	**80**	-	-	-	-	-	-	-	-	-	-	-	-	-	-	-	150	-	-	150	-	-	100	-	-	100	-	-
FG630N	**50**	-	-	-	-	-	-	-	-	-	-	-	-	-	-	-	-	-	80	150	-	80	100	-	80	100	-	80
FG630H	**80**	-	-	-	-	-	-	-	-	-	-	-	-	-	-	-	-	-	-	150	-	-	100	-	-	100	-	-
FK800N	**50**	-	-	-	-	-	-	-	-	-	-	-	-	-	-	-	-	-	-	-	-	80	100	-	80	100	-	80
FK800H	**80**	-	-	-	-	-	-	-	-	-	-	-	-	-	-	-	-	-	-	-	-	-	100	-	-	100	-	-
FK1250N	**50**	-	-	-	-	-	-	-	-	-	-	-	-	-	-	-	-	-	-	-	-	80	100	-	80	100	-	80
FK1250H	**80**	-	-	-	-	-	-	-	-	-	-	-	-	-	-	-	-	-	-	-	-	-	100	-	-	100	-	-

Application guide Selectivity Plus

Back-up protection requires an upstream device to open in order to protect the downstream device(s) before the downstream devices can be damaged. For continuity of service it is desirable that the upstream device remains closed and that only the downstream device closest to the fault reacts.
The ***Record Plus™*** family of breakers resolves this paradox: the breakers are so current limiting that let-through energy and current are not sufficient to operate the upstream breaker. The result discrimination to current levels that are higher than the rated short-circuit breaking capacity of the downstream breaker.
Tables DB1 to DB5 provide the data for the ***Record Plus™*** breaker line used in combination with the ElfaPlus, Surion and MPact protection devices. The values in the table are in kA and indicate the results of the Selectivity Plus technique.
Before the slash the discrimination limit in kA, after the slash the back-up protection value at 400V in kA (e.g. 50/80).

Table DB1 - Selectivity Plus

Upstream / Downstream	In (A)	*Record Plus™* type																							
		FDC 160 LTM				FDE 160 LTM				FDS 160 LTMD				FDN 160 LTMD				FDH 160 LTMD				FDL 160 LTMD			
		63	80	100	125 160	63	80	100	125 160	63	80	100	125 160	63	80	100	125 160	63	80	100	125 160	63	80	100	125 160
		Selectivity limit in kA / Maximum Icu of combination at 400/415V AC																							
Redline G & EPC30/45 B/C curve	≤16	6/15	6/15	10/15	15/15	6/18	6/18	10/18	18/18	22/22	22/22	22/22	22/22	25/25	25/25	25/25	25/25	30/30	30/30	30/30	30/30	36/36	36/36	36/36	36/36
	20	3/15	6/15	8/15	15/15	3/18	6/18	8/18	18/18	22/22	22/22	22/22	22/22	25/25	25/25	25/25	25/25	30/30	30/30	30/30	30/30	36/36	36/36	36/36	36/36
	25	-	6/15	6/15	15/15	-	6/18	6/18	18/18	15/22	15/22	22/22	22/22	15/25	15/25	25/25	25/25	15/30	15/30	30/30	30/30	15/36	15/36	30/36	30/36
	32	-	3/15	6/15	15/15	-	3/18	6/18	18/18	10/22	10/22	22/22	22/22	10/25	10/25	25/25	25/25	10/30	10/30	30/30	30/30	10/36	10/36	36/36	30/36
	40	-	3/15	4/15	15/15	-	3/18	4/18	18/18	3,5/22	10/22	15/22	22/22	3,5/25	10/25	15/25	25/25	3,5/30	10/30	15/30	25/30	3,5/36	10/36	15/36	25/36
Redline G60 B/C curve	≤16	6/18	6/18	10/18	18/18	6/22	6/22	10/22	22/22	25/25	25/25	25/25	25/25	30/30	30/30	30/30	30/30	36/36	36/36	36/36	36/36	36/42	36/42	36/42	36/42
	20	3/18	6/18	8/18	18/18	3/22	6/22	8/22	22/22	25/25	25/25	25/25	25/25	30/30	30/30	30/30	30/30	36/36	36/36	36/36	36/36	36/42	36/42	36/42	36/42
	25	-	6/18	6/18	18/18	-	6/22	6/22	22/22	15/25	15/25	25/25	25/25	15/30	15/30	30/30	30/30	15/36	15/36	30/36	30/36	15/42	15/42	30/42	30/42
	32	-	3/18	6/18	18/18	-	3/22	6/22	22/22	10/25	10/25	25/25	25/25	10/30	10/30	30/30	30/30	10/36	10/36	36/36	30/36	10/42	10/42	36/42	30/42
	40	-	3/18	4/18	18/18	-	3/22	4/22	22/22	3,5/25	10/25	15/25	25/25	3,5/30	10/30	15/30	25/30	3,5/36	10/36	15/36	25/36	3,5/42	10/42	15/42	25/42
	50	-	-	1,5/18	6/18	-	-	1,5/22	6/22	-	3,5/25	10/25	22/25	-	3,5/30	10/30	22/30	-	3,5/36	10/36	22/36	-	3,5/42	10/42	22/42
	63	-	-	-	-	-	-	-	-	-	-	8/25	22/25	-	-	8/30	22/30	-	-	8/36	22/36	-	-	8/42	22/42
Redline G100 B/C curve	≤16	6/18	6/18	10/18	18/18	6/25	6/25	10/25	25/25	30/30	30/30	30/30	30/30	36/36	36/36	36/36	36/36	36/42	36/42	36/42	36/42	36/50	36/50	36/50	36/50
	20	3/18	6/18	8/18	18/18	3/25	6/25	8/25	25/25	30/30	30/30	30/30	30/30	36/36	36/36	36/36	36/36	36/42	36/42	36/42	36/42	36/50	36/50	36/50	36/50
	25	-	6/18	6/18	18/18	-	6/25	6/25	25/25	15/30	30/30	30/30	30/30	15/36	36/36	30/36	30/36	15/42	36/42	30/42	30/42	15/50	15/50	30/50	30/50
	32	-	3/18	6/18	18/18	-	3/25	6/25	25/25	10/30	10/30	30/30	30/30	10/36	10/36	30/36	30/36	10/42	10/42	30/42	30/42	10/50	10/50	30/50	30/50
	40	-	3/18	4/18	18/18	-	3/25	4/25	25/25	3,5/30	10/30	15/30	25/30	3,5/36	10/36	15/36	25/36	3,5/42	10/42	15/42	25/42	3,5/50	10/50	15/50	25/50
	50	-	-	1,5/18	6/18	-	-	-	6/25	-	3,5/30	10/30	22/30	-	3,5/36	10/36	22/36	-	3,5/42	10/42	22/42	-	3,5/50	10/50	22/50
	63	-	-	-	2/18	-	-	-	2/25	-	-	8/30	22/30	-	-	8/36	22/36	-	-	8/42	22/42	-	-	8/50	22/50
Redline GT25 B/C curve	≤20	-	-	-	-	-	-	-	-	36/36	36/36	36/36	36/36	36/42	36/42	36/42	36/42	36/50	36/50	36/50	36/50	36/65	36/65	36/65	36/65
	25	-	-	-	-	-	-	-	-	15/36	15/36	30/36	30/36	15/42	15/42	30/42	30/42	15/50	15/50	30/50	30/50	15/65	15/65	30/65	30/65
	32	-	-	-	-	-	-	-	-	10/30	10/30	36/30	30/30	10/36	10/36	36/36	30/36	10/42	10/42	36/42	30/42	10/50	10/50	36/50	30/50
	40	-	-	-	-	-	-	-	-	3,5/30	10/30	15/30	25/30	3,5/36	10/36	15/36	25/36	3,5/42	10/42	15/42	25/42	3,5/50	10/50	15/50	25/50
	50	-	-	-	-	-	-	-	-	-	3,5/30	10/30	22/30	-	3,5/36	10/36	22/36	-	3,5/42	10/42	22/42	-	3,5/50	10/50	22/50
	63	-	-	-	-	-	-	-	-	-	-	8/30	22/30	-	-	8/36	22/36	-	-	8/42	22/42	-	-	8/50	22/50
Surion GPS1BS & GPS1MS	≤10	-	-	-	-	-	-	-	-	-	-	-	-	-	-	-	-	-	-	-	-	150/150	150/150	150/150	150/150
	12.5	-	-	-	-	-	-	-	-	-	-	-	-	-	-	-	-	80/80	80/80	80/80	80/80	150/150	150/150	150/150	150/150
	16/20	-	-	-	-	-	-	-	-	36/36	36/36	36/36	36/36	42/42	42/42	42/42	42/42	50/50	50/50	50/50	50/50	65/65	65/65	65/65	65/65
	25/32	-	-	-	-	-	-	-	-	36/36	36/36	36/36	36/36	42/42	42/42	42/42	42/42	50/50	50/50	50/50	50/50	65/65	65/65	65/65	65/65
	40	-	-	-	-	-	-	-	-	-	36/36	36/36	36/36	-	42/42	42/42	42/42	-	50/50	50/50	50/50	-	65/65	65/65	65/65
	50/63	-	-	-	-	-	-	-	-	-	-	36/36	36/36	-	-	42/42	42/42	-	-	50/50	50/50	-	-	65/65	65/65
Surion GPS2BS & GPS2MS	≤10	-	-	-	-	-	-	-	-	-	-	-	-	-	-	-	-	-	-	-	-	150/150	150/150	150/150	150/150
	12.5	-	-	-	-	-	-	-	-	36/36	36/36	36/36	36/36	42/42	42/42	42/42	42/42	50/50	50/50	50/50	50/50	65/65	65/65	65/65	65/65
	16/20	-	-	-	-	-	-	-	-	36/36	36/36	36/36	36/36	42/42	42/42	42/42	42/42	50/50	50/50	50/50	50/50	65/65	65/65	65/65	65/65
	25/32	-	-	-	-	-	-	-	-	36/36	36/36	36/36	36/36	42/42	42/42	42/42	42/42	50/50	50/50	50/50	50/50	65/65	65/65	65/65	65/65
	40	-	-	-	-	-	-	-	-	-	36/36	36/36	36/36	-	42/42	42/42	42/42	-	50/50	50/50	50/50	-	65/65	65/65	65/65
	50/63	-	-	-	-	-	-	-	-	-	-	36/36	36/36	-	-	42/42	42/42	-	-	50/50	50/50	-	-	65/65	65/65
Surion GPS1BH & GPS1MH GPS2BH & GPS2MH	≤10	-	-	-	-	-	-	-	-	-	-	-	-	-	-	-	-	-	-	-	-	150/150	150/150	150/150	150/150
	12.5	-	-	-	-	-	-	-	-	-	-	-	-	-	-	-	-	-	-	-	-	150/150	150/150	150/150	150/150
	16/20	-	-	-	-	-	-	-	-	-	-	-	-	-	-	-	-	80/80	80/80	80/80	80/80	150/150	150/150	150/150	150/150
	25/32	-	-	-	-	-	-	-	-	-	-	-	-	-	-	-	-	80/80	80/80	80/80	80/80	150/15	150/150	150/150	150/150
	40	-	-	-	-	-	-	-	-	-	-	-	-	-	-	-	-	-	80/80	80/80	80/80	-	150/150	150/150	150/150
	50/63	-	-	-	-	-	-	-	-	-	-	-	-	-	-	-	-	-	-	80/80	80/80	-	-	150/150	150/150

Table DB1a - Selectivity Plus

		Selectivity limit in kA / Maximum Icu of combination at 230/240V AC																							
Redline EPC30 & 45 B/C curve	≤16	6/15	6/15	10/15	10/15	6/15	6/15	10/15	10/15	15/15	15/15	15/15	15/15	15/15	15/15	15/15	15/15	15/15	15/15	15/15	15/15	15/15	15/15	15/15	15/15
	20	3/15	6/15	8/15	10/15	3/15	6/15	8/15	10/15	15/15	15/15	15/15	15/15	15/15	15/15	15/15	15/15	15/15	15/15	15/15	15/15	15/15	15/15	15/15	15/15
	25	-	6/15	6/15	10/15	-	6/15	6/15	10/15	15/15	15/15	15/15	15/15	15/15	15/15	15/15	15/15	15/15	15/15	15/15	15/15	15/15	15/15	15/15	15/15
	32	-	3/15	6/15	10/15	-	3/15	6/15	10/15	10/15	10/15	15/15	15/15	10/15	10/15	15/15	15/15	10/15	10/15	15/15	15/15	10/15	10/15	15/15	15/15
	40	-	3/15	4/15	10/15	-	3/15	4/15	10/15	3,5/15	10/15	15/15	15/15	3,5/15	10/15	15/15	15/15	3,5/15	10/15	15/15	15/15	3,5/15	10/15	15/15	15/15
Redline DME60 EPC61N & EPC60 B/C curve	≤16	6/15	6/15	10/15	10/15	6/18	6/18	10/18	10/18	22/22	22/22	22/22	22/22	22/22	22/22	22/22	22/22	22/22	22/22	22/22	22/22	22/22	22/22	22/22	22/22
	20	3/15	6/15	8/15	10/15	3/18	6/18	8/18	10/18	22/22	22/22	22/22	22/22	22/22	22/22	22/22	22/22	22/22	22/22	22/22	22/22	22/22	22/22	22/22	22/22
	25	-	6/15	6/15	10/15	-	6/18	6/18	10/18	15/22	22/22	22/22	22/22	15/22	22/22	22/22	22/22	15/22	22/22	22/22	22/22	15/22	22/22	22/22	22/22
	32	-	3/15	6/15	10/15	-	3/18	6/18	10/18	10/22	10/22	22/22	22/22	10/22	10/22	22/22	22/22	10/22	10/22	22/22	22/22	10/22	10/22	22/22	22/22
	40	-	3/15	4/15	10/15	-	3/18	4/18	10/18	3,5/22	10/22	15/22	25/22	3,5/22	10/22	15/22	25/22	3,5/22	10/22	15/22	25/22	3,5/22	10/22	15/22	25/22
Redline DME100 & EPC101N B/C curve	≤16	6/18	6/18	10/18	18/18	6/22	6/22	10/22	10/22	25/25	25/25	25/25	25/25	25/25	25/25	25/25	25/25	25/25	25/25	25/25	25/25	25/25	25/25	25/25	25/25
	20	3/18	6/18	8/18	18/18	3/22	6/22	8/22	10/22	25/25	25/25	25/25	25/25	25/25	25/25	25/25	25/25	25/25	25/25	25/25	25/25	25/25	25/25	25/25	25/25
	25	-	6/18	6/18	18/18	-	6/22	6/22	10/22	15/25	25/25	25/25	25/25	15/25	25/25	25/25	25/25	15/25	25/25	25/25	25/25	15/25	25/25	25/25	25/25
	32	-	3/18	6/18	18/18	-	3/22	6/22	10/22	10/25	10/25	25/25	25/25	10/25	10/25	25/25	25/25	10/25	10/25	10/25	25/25	10/25	10/25	10/25	25/25
	40	-	3/18	4/18	18/18	-	3/22	4/22	10/22	3.5/25	10/25	15/25	25/25	3.5/25	10/25	15/25	25/25	3.5/25	10/25	10/25	25/25	3.5/25	10/25	10/25	25/25

Table DB2 - Selectivity Plus

Upstream / Downstream	In (A)	Record Plus™ type																									
		FE160N-LTMD/SMR1				FE160H-LTMD/SMR1				FE160L-LTMD/SMR1				FE250N-LTMD/SMR1				FE250H-LTMD/SMR1				FE250L-LTMD/SMR1			
		63	100	125	160	63	100	125	160	63	100	125	160	125	160	200	250	125	160	200	250	125	160	200	250
		Selectivity limit in kA / Maximum Icu of combination at 400/415V AC																							
Redline	**≤25**	25/25	25/25	25/25	25/25	30/30	30/30	30/30	30/30	36/36	36/36	36/36	36/36	22/22	22/22	22/22	22/22	25/25	25/25	25/25	25/25	30/30	30/30	30/30	30/30
G30 & EPC30/45	**32**	25/25	25/25	25/25	25/25	30/30	30/30	30/30	30/30	36/36	36/36	36/36	36/36	22/22	22/22	22/22	22/22	25/25	25/25	25/25	25/25	30/30	30/30	30/30	30/30
B/C curve	**40**	-	25/25	25/25	25/25	-	30/30	30/30	30/30	-	36/36	36/36	36/36	22/22	22/22	22/22	22/22	25/25	25/25	25/25	25/25	30/30	30/30	30/30	30/30
Redline	**≤25**	30/30	30/30	30/30	30/30	36/36	36/36	36/36	36/36	42/42	42/42	42/42	42/42	30/30	30/30	30/30	30/30	36/36	36/36	36/36	36/36	36/36	36/36	36/36	36/36
G60	**32**	30/30	30/30	30/30	30/30	36/36	36/36	36/36	36/36	42/42	42/42	42/42	42/42	30/30	30/30	30/30	30/30	36/36	36/36	36/36	36/36	36/36	36/36	36/36	36/36
B/C curve	**40**	-	30/30	30/30	30/30	-	36/36	36/36	36/36	-	42/42	42/42	42/42	30/30	30/30	30/30	30/30	36/36	36/36	36/36	36/36	36/36	36/36	36/36	36/36
	50	-	30/30	30/30	30/30	-	36/36	36/36	36/36	-	42/42	42/42	42/42	30/30	30/30	30/30	30/30	36/36	36/36	36/36	36/36	36/36	36/36	36/36	36/36
	63	-	-	30/30	30/30	-	-	36/36	36/36	-	-	42/42	42/42	30/30	30/30	30/30	30/30	36/36	36/36	36/36	36/36	36/36	36/36	36/36	36/36
Redline	**≤25**	36/36	36/36	36/36	36/36	42/42	42/42	42/42	42/42	50/50	50/50	50/50	50/50	30/30	30/30	30/30	30/30	36/36	36/36	36/36	36/36	36/36	36/36	36/36	36/36
G100	**32**	36/36	36/36	36/36	36/36	42/42	42/42	42/42	42/42	50/50	50/50	50/50	50/50	30/30	30/30	30/30	30/30	36/36	36/36	36/36	36/36	36/36	36/36	36/36	36/36
B/C curve	**40**	-	36/36	36/36	36/36	-	42/42	42/42	42/42	-	50/50	50/50	50/50	30/30	30/30	30/30	30/30	36/36	36/36	36/36	36/36	36/36	36/36	36/36	36/36
	50	-	36/36	36/36	36/36	-	42/42	42/42	42/42	-	50/50	50/50	50/50	30/30	30/30	30/30	30/30	36/36	36/36	36/36	36/36	36/36	36/36	36/36	36/36
	63	-	-	36/36	36/36	-	-	42/42	42/42	-	-	50/50	50/50	30/30	30/30	30/30	30/30	36/36	36/36	36/36	36/36	36/36	36/36	36/36	36/36
Redline	**≤25**	42/42	42/42	42/42	42/42	50/50	50/50	50/50	50/50	65/65	65/65	65/65	65/65	36/36	36/36	36/36	36/36	42/42	42/42	42/42	42/42	42/42	42/42	42/42	42/42
GT25	**32**	36/36	36/36	36/36	36/36	42/42	42/42	42/42	42/42	50/50	50/50	50/50	50/50	36/36	36/36	36/36	36/36	42/42	42/42	42/42	42/42	42/42	42/42	42/42	42/42
B/C curve	**40**	-	36/36	36/36	36/36	-	42/42	42/42	42/42	-	50/50	50/50	50/50	36/36	36/36	36/36	36/36	42/42	42/42	42/42	42/42	42/42	42/42	42/42	42/42
	50	-	36/36	36/36	36/36	-	42/42	42/42	42/42	-	50/50	50/50	50/50	30/30	30/30	30/30	30/30	36/36	36/36	36/36	36/36	36/36	36/36	36/36	36/36
	63	-	-	36/36	36/36	-	-	42/42	42/42	-	-	50/50	50/50	30/30	30/30	30/30	30/30	36/36	36/36	36/36	36/36	36/36	36/36	36/36	36/36
Surion	**≤10**	-	-	-	-	-	-	-	-	150/150	150/150	150/150	150/150	-	-	-	-	-	-	-	-	150/150	150/150	150/150	150/150
GPS1BS & GPS1MS	**12.5**	-	-	-	-	80/80	80/80	80/80	80/80	150/150	150/150	150/150	150/150	-	-	-	-	80/80	80/80	80/80	80/80	150/150	150/150	150/150	150/150
	16/20	42/42	42/42	42/42	42/42	50/50	50/50	50/50	50/50	65/65	65/65	65/65	65/65	42/42	42/42	42/42	42/42	50/50	50/50	50/50	50/50	65/65	65/65	65/65	65/65
	25/32	42/42	42/42	42/42	42/42	50/50	50/50	50/50	50/50	65/65	65/65	65/65	65/65	42/42	42/42	42/42	42/42	50/50	50/50	50/50	50/50	65/65	65/65	65/65	65/65
	40	-	42/42	42/42	42/42	-	50/50	50/50	50/50	-	65/65	65/65	65/65	42/42	42/42	42/42	42/42	50/50	50/50	50/50	50/50	65/65	65/65	65/65	65/65
	50/63	-	-	42/42	42/42	-	---	50/50	50/50	-	-	65/65	65/65	42/42	42/42	42/42	42/42	50/50	50/50	50/50	50/50	65/65	65/65	65/65	65/65
Surion	**≤10**	-	-	-	-	-	-	-	-	150/150	150/150	150/150	150/150	-	-	-	-	-	-	-	-	150/150	150/150	150/150	150/150
GPS2BS & GPS2MS	**12.5**	42/42	42/42	42/42	42/42	50/50	50/50	50/50	50/50	65/65	65/65	65/65	65/65	42/42	42/42	42/42	42/42	50/50	50/50	50/50	50/50	65/65	65/65	65/65	65/65
	16/20	42/42	42/42	42/42	42/42	50/50	50/50	50/50	50/50	65/65	65/65	65/65	65/65	42/42	42/42	42/42	42/42	50/50	50/50	50/50	50/50	65/65	65/65	65/65	65/65
	25/32	42/42	42/42	42/42	42/42	50/50	50/50	50/50	50/50	65/65	65/65	65/65	65/65	42/42	42/42	42/42	42/42	50/50	50/50	50/50	50/50	65/65	65/65	65/65	65/65
	40	-	42/42	42/42	42/42	-	50/50	50/50	50/50	-	65/65	65/65	65/65	42/42	42/42	42/42	42/42	-	50/50	50/50	50/50	-	65/65	65/65	65/65
	50/63	-	-	42/42	42/42	-	-	50/50	50/50	-	-	65/65	65/65	42/42	42/42	42/42	42/42	-	-	50/50	50/50	-	-	65/65	65/65
Surion	**≤10**	-	-	-	-	-	-	-	-	150/150	150/150	150/150	150/150	-	-	-	-	-	-	-	-	150/150	150/150	150/150	150/150
GPS1BH & GPS1MH	**12.5**	-	-	-	-	-	-	-	-	150/150	150/150	150/150	150/150	-	-	-	-	-	-	-	-	150/150	150/150	150/150	150/150
GPS2BH & GPS2MH	**16/20**	-	-	-	-	80/80	80/80	80/80	80/80	150/150	150/150	150/150	150/150	-	-	-	-	80/80	80/80	80/80	80/80	150/150	150/150	150/150	150/150
	25/32	-	-	-	-	80/80	80/80	80/80	80/80	150/150	150/150	150/150	150/150	-	-	-	-	80/80	80/80	80/80	80/80	150/150	150/150	150/150	150/150
	40	-	-	-	-	--	80/80	80/80	80/80	-	150/150	150/150	150/150	-	-	-	-	80/80	80/80	80/80	80/80	150/150	150/150	150/150	150/150
	50/63	-	-	-	-	-	-	80/80	80/80	-	-	150/150	150/150	-	-	-	-	80/80	80/80	80/80	80/80	150/150	150/150	150/150	150/150

Table DB2a - Selectivity Plus

Upstream / Downstream	In (A)	Record Plus™ type																							
		FE160N-LTMD/SMR1				FE160H-LTMD/SMR1				FE160L-LTMD/SMR1				FE250N-LTMD/SMR1				FE250H-LTMD/SMR1				FE250L-LTMD/SMR1			
		63	100	125	160	63	100	125	160	63	100	125	160	125	160	200	250	125	160	200	250	125	160	200	250
		Selectivity limit in kA / Maximum Icu of combination at 230/240 AC																							
Redline	**≤16**	12/12	12/12	12/12	12/12	12/12	12/12	12/12	12/12	12/12	12/12	12/12	12/12	10/10	10/10	10/10	10/10	10/10	10/10	10/10	10/10	10/10	10/10	10/10	10/10
EPC30 & 45	**20**	12/12	12/12	12/12	12/12	12/12	12/12	12/12	12/12	12/12	12/12	12/12	12/12	10/10	10/10	10/10	10/10	10/10	10/10	10/10	10/10	10/10	10/10	10/10	10/10
B/C curve	**25**	12/12	12/12	12/12	12/12	12/12	12/12	12/12	12/12	12/12	12/12	12/12	12/12	10/10	10/10	10/10	10/10	10/10	10/10	10/10	10/10	10/10	10/10	10/10	10/10
	32	12/12	12/12	12/12	12/12	12/12	12/12	12/12	12/12	12/12	12/12	12/12	12/12	10/10	10/10	10/10	10/10	10/10	10/10	10/10	10/10	10/10	10/10	10/10	10/10
	40	-	12/12	12/12	12/12	-	12/12	12/12	12/12	-	12/12	12/12	12/12	10/10	10/10	10/10	10/10	10/10	10/10	10/10	10/10	10/10	10/10	10/10	10/10
Redline	**≤16**	18/18	18/18	18/18	18/18	18/18	18/18	18/18	18/18	18/18	18/18	18/18	18/18	15/15	15/15	15/15	15/15	15/15	15/15	15/15	15/15	15/15	15/15	15/15	15/15
DME60	**20**	18/18	18/18	18/18	18/18	18/18	18/18	18/18	18/18	18/18	18/18	18/18	18/18	15/15	15/15	15/15	15/15	15/15	15/15	15/15	15/15	15/15	15/15	15/15	15/15
& C60	**25**	18/18	18/18	18/18	18/18	18/18	18/18	18/18	18/18	18/18	18/18	18/18	18/18	15/15	15/15	15/15	15/15	15/15	15/15	15/15	15/15	15/15	15/15	15/15	15/15
B/C curve	**32**	18/18	18/18	18/18	18/18	18/18	18/18	18/18	18/18	18/18	18/18	18/18	18/18	15/15	15/15	15/15	15/15	15/15	15/15	15/15	15/15	15/15	15/15	15/15	15/15
	40	-	18/18	18/18	18/18	-	18/18	18/18	18/18	-	18/18	18/18	18/18	15/15	15/15	15/15	15/15	15/15	15/15	15/15	15/15	15/15	15/15	15/15	15/15
Redline	**≤16**	22/22	22/22	22/22	22/22	22/22	22/22	22/22	22/22	22/22	22/22	22/22	22/22	18/18	18/18	18/18	18/18	18/18	18/18	18/18	18/18	18/18	18/18	18/18	18/18
DME100	**20**	22/22	22/22	22/22	22/22	22/22	22/22	22/22	22/22	22/22	22/22	22/22	22/22	18/18	18/18	18/18	18/18	18/18	18/18	18/18	18/18	18/18	18/18	18/18	18/18
B/C curve	**25**	22/22	22/22	22/22	22/22	22/22	22/22	22/22	22/22	22/22	22/22	22/22	22/22	18/18	18/18	18/18	18/18	18/18	18/18	18/18	18/18	18/18	18/18	18/18	18/18
	32	22/22	22/22	22/22	22/22	22/22	22/22	22/22	22/22	22/22	22/22	22/22	22/22	18/18	18/18	18/18	18/18	18/18	18/18	18/18	18/18	18/18	18/18	18/18	18/18
	40	-	22/22	22/22	22/22	-	22/22	22/22	22/22	-	22/22	22/22	22/22	18/18	18/18	18/18	18/18	18/18	18/18	18/18	18/18	18/18	18/18	18/18	18/18

Table DB3 - Selectivity Plus

Upstream / Downstream		*Record Plus*™ type																					
		FE160N-LTMD			FE160H-LTMD			FE160L-LTMD			FE250N-LTMD				FE250H-LTMD				FE250L-LTMD			
	In (A)	100	125	160	100	125	160	100	125	160	125	160	200	250	125	160	200	250	125	160	200	250
		Selectivity limit in kA / Maximum Icu of combination at 400/415V AC																					
Record Plus™																							
LTM, LTMD, GTM & MO																							
FD160C	≤63	30/30	30/30	30/30	30/36	30/36	30/36	30/42	30/42	30/42	30/30	30/30	30/30	30/30	36/36	36/36	36/36	36/36	42/42	42/42	42/42	42/42
FD160E	≤63	30/36	30/36	30/36	30/42	30/42	30/42	30/50	30/50	30/50	36/36	36/36	36/36	36/36	42/42	42/42	42/42	42/42	42/50	42/50	42/50	42/50
FD160S	≤63	30/42	30/42	30/42	30/50	30/50	30/50	30/65	30/65	30/65	42/42	42/42	42/42	42/42	42/50	42/50	42/50	42/50	42/65	42/65	42/65	42/65
FD160N	≤63	30/50	30/50	30/50	30/80	30/80	30/80	30/150	30/150	30/150	42/50	42/50	42/50	42/50	42/80	42/80	42/80	42/80	42/150	42/150	42/150	42/150
FD160H	≤63	-	-	-	30/80	30/80	30/80	30/150	30/150	30/150	-	-	-	-	42/80	42/80	42/80	42/80	42/150	42/150	42/150	42/150
LTM, LTMD, GTM & MO																							
FDC160	≤100	-	-	30/30	-	-	30/36	-	-	30/42	-	30/30	30/30	30/30	-	36/36	36/36	36/36	-	42/42	42/42	42/42
FDE160	≤100	-	-	30/36	-	-	30/42	-	-	30/50	-	36/36	36/36	36/36	-	42/42	42/42	42/42	-	42/50	42/50	42/50
FDS160	≤100	-	-	30/42	-	-	30/50	-	-	30/65	-	42/42	42/42	42/42	-	42/50	42/50	42/50	-	42/65	42/65	42/65
FDN160	≤100	-	-	30/50	-	-	30/80	-	-	30/150	-	42/50	42/50	42/50	-	42/80	42/80	42/80	-	42/150	42/150	42/150
FDH160	≤100	-	-	-	-	-	30/80	-	-	30/150	-	-	-	-	-	42/80	42/80	42/80	-	42/150	42/150	42/150
LTM, LTMD & GTM																							
FDC160	125	-	-	-	-	-	-	-	-	-	-	-	30/30	30/30	-	-	36/36	36/36	-	-	42/42	42/42
FDE160	125	-	-	-	-	-	-	-	-	-	-	-	36/36	36/36	-	-	42/42	42/42	-	-	42/50	42/50
FDS160	125	-	-	-	-	-	-	-	-	-	-	-	42/42	42/42	-	-	42/50	42/50	-	-	42/65	42/65
FDN160	125	-	-	-	-	-	-	-	-	-	-	-	42/50	42/50	-	-	42/80	42/80	-	-	42/150	42/150
FDH160	125	-	-	-	-	-	-	-	-	-	-	-	-	-	-	-	42/80	42/80	-	-	42/150	42/150
LTM, LTMD & GTM																							
FDC160	160	-	-	-	-	-	-	-	-	-	-	-	-	30/30	-	-	-	36/36	-	-	-	42/42
FDE160	160	-	-	-	-	-	-	-	-	-	-	-	-	36/36	-	-	-	42/42	-	-	-	42/50
FDS160	160	-	-	-	-	-	-	-	-	-	-	-	-	42/42	-	-	-	42/50	-	-	-	42/65
FDN160	160	-	-	-	-	-	-	-	-	-	-	-	-	42/50	-	-	-	42/80	-	-	-	42/150
FDH160	160	-	-	-	-	-	-	-	-	-	-	-	-	-	-	-	-	42/80	-	-	-	42/150

Table DB4 - Selectivity Plus

Upstream / Downstream		*Record Plus*™ type																					
		FE160N-SMR1			FE160H-SMR1			FE160L-SMR1			FE250N-SMR1				FE250H-SMR1				FE250L-SMR1			
	In (A)	100	125	160	100	125	160	100	125	160	125	160	200	250	125	160	200	250	125	160	200	250
		Selectivity limit in kA / Maximum Icu of combination at 400/415V AC																					
Record Plus™																							
LTM, LTMD, GTM & MO																							
FD160C	≤63	-	30/30	30/30	-	30/36	30/36	-	36/42	36/42	30/30	30/30	30/30	30/30	36/36	36/36	36/36	36/36	42/42	42/42	42/42	42/42
FD160E	≤63	-	36/36	36/36	-	30/42	30/42	-	36/50	36/50	36/36	36/36	36/36	36/36	42/42	42/42	42/42	42/42	50/50	50/50	50/50	50/50
FD160S	≤63	-	36/42	36/42	-	30/50	30/50	-	36/65	36/65	42/42	42/42	42/42	42/42	50/50	50/50	50/50	50/50	50/65	50/65	50/65	50/65
FD160N	≤63	-	36/50	36/50	-	30/80	30/80	-	36/150	36/150	50/50	50/50	50/50	50/50	50/80	50/80	50/80	50/80	50/150	50/150	50/150	50/150
FD160H	≤63	-	-	-	-	30/80	30/80	-	36/150	36/150	-	-	-	-	50/80	50/80	50/80	50/80	50/150	50/150	50/150	50/150
LTM, LTMD, GTM & MO																							
FDC160	≤100	-	-	30/30	-	-	30/36	-	-	36/42	-	30/30	30/30	30/30	-	36/36	36/36	36/36	-	42/42	42/42	42/42
FDE160	≤100	-	-	36/36	-	-	30/42	-	-	36/50	-	36/36	36/36	36/36	-	42/42	42/42	42/42	-	50/50	50/50	50/50
FDS160	≤100	-	-	36/42	-	-	30/50	-	-	36/65	-	42/42	42/42	42/42	-	50/50	50/50	50/50	-	50/65	50/65	50/65
FDN160	≤100	-	-	36/50	-	-	30/80	-	-	36/150	-	50/50	50/50	50/50	-	50/80	50/80	50/80	-	50/150	50/150	50/150
FDH160	≤100	-	-	-	-	-	30/80	-	-	36/150	-	-	-	-	-	50/80	50/80	50/80	-	50/150	50/150	50/150
LTM, LTMD & GTM																							
FDC160	125	-	-	-	-	-	-	-	-	-	-	-	30/30	30/30	-	-	36/36	36/36	-	-	42/42	42/42
FDE160	125	-	-	-	-	-	-	-	-	-	-	-	36/36	36/36	-	-	42/42	42/42	-	-	50/50	50/50
FDS160	125	-	-	-	-	-	-	-	-	-	-	-	42/42	42/42	-	-	50/50	50/50	-	-	50/65	50/65
FDN160	125	-	-	-	-	-	-	-	-	-	-	-	50/50	50/50	-	-	50/80	50/80	-	-	50/150	50/150
FDH160	125	-	-	-	-	-	-	-	-	-	-	-	-	-	-	-	-	-	-	-	50/150	50/150
LTM, LTMD & GTM																							
FDC160	160	-	-	-	-	-	-	-	-	-	-	-	-	30/30	-	-	-	36/36	-	-	-	42/42
FDE160	160	-	-	-	-	-	-	-	-	-	-	-	-	36/36	-	-	-	42/42	-	-	-	50/50
FDS160	160	-	-	-	-	-	-	-	-	-	-	-	-	42/42	-	-	-	50/50	-	-	-	50/65
FDN160	160	-	-	-	-	-	-	-	-	-	-	-	-	50/50	-	-	-	50/80	-	-	-	50/150
FDH160	160	-	-	-	-	-	-	-	-	-	-	-	-	-	-	-	-	50/80	-	-	-	50/150

Table DB5 - Selectivity Plus

Upstream / Downstream	*Record Plus*™ type											
	FG400N-SMR1		FG400H-SMR1		FG400L-SMR1		FG630N-SMR1		FG630H-SMR1		FG630L-SMR1	
In (A)	250	400	250	400	250	400	400	500 - 630	400	500 - 630	400	500 - 630
	Selectivity limit in kA / Maximum Icu of combination at 400/415V AC											
Record Plus™												
LTM, LTMD, GTM & MO												
FDC160	30/30	30/30	36/36	36/36	42/42	42/42	30/30	30/30	36/36	36/36	42/42	42/42
FDE160	36/36	36/36	42/42	42/42	50/50	50/50	36/36	36/36	42/42	42/42	50/50	50/50
FDS160	42/42	42/42	50/50	50/50	65/65	65/65	42/42	42/42	50/50	50/50	65/65	65/65
FDN160	50/50	50/50	80/80	80/80	150/150	150/150	50/50	50/50	80/80	80/80	150/150	150/150
FDH160	-	-	80/80	80/80	150/150	150/150	-	-	80/80	80/80	150/150	150/150
LTM, LTMD, GTM, MO& SMR1												
FEN160	50/50	50/50	80/80	80/80	150/150	150/150	50/50	50/50	80/80	80/80	150/150	150/150
FEH160	-	-	80/80	80/80	150/150	150/150	-	-	80/80	80/80	150/150	150/150
FEN250	-	-	80/80	80/80	150/150	150/150	50/50	50/50	80/80	80/80	150/150	150/150
FEH250	-	-	80/80	80/80	150/150	150/150	-	-	80/80	80/80	150/150	150/150

Table DB6 - Selectivity Plus

Upstream / Downstream	*Record Plus*™ type										
	FK800N-SMR	FK800H-SMR	FK800L-SMR	FK1250N-SMR		FK1250H-SMR		FK1250L-SMR		FK1600N-SMR	FK1600H-SMR
In (A)	800	800	800	1000	1250	1000	1250	1000	1250	1600	1600
	Selectivity limit in kA / Maximum Icu of combination at 400/415V AC										
Record Plus™											
LTM, LTMD, GTM & MO											
FDN160	50/50	80/80	100/100	50/50	50/50	80/80	80/80	100/100	100/100	50/50	80/80
FDH160	50/50	80/80	100/100	50/50	50/50	80/80	80/80	100/100	100/100	50/50	80/80
LTM, LTMD, GTM, MO & SMR1											
FEN160	50/50	80/80	100/100	50/50	50/50	80/80	80/80	100/100	100/100	50/50	80/80
FEH160	50/50	80/80	100/100	50/50	50/50	80/80	80/80	100/100	100/100	50/50	80/80
FEN250	50/50	80/80	100/100	50/50	50/50	80/80	80/80	100/100	100/100	50/50	80/80
FEH250	-	80/80	100/100	50/50	50/50	80/80	80/80	100/100	100/100	50/50	80/80
SMR1 & SMR2											
FGN400	50/50	80/80	100/100	50/50	50/50	80/80	80/80	100/100	100/100	50/50	80/80
FGH400	50/50	80/80	100/100	50/50	50/50	80/80	80/80	100/100	100/100	50/50	80/80
FGN630	15/50	15/80	15100	50/50	50/50	80/80	80/80	100/100	100/100	50/50	80/80
FGH630	-	15/80	15/100	-	-	80/80	80/80	100/100	100/100	50/50	80/80
SMR1											
FKN800	-	-	-	15/50	15/50	15/80	15/80	15/100	15/100	25/50	25/80
FKH800	-	-	-	-	-	15/80	15/80	15/100	15/100	25/50	25/80
FKN1250	-	-	-	-	-	-	-	-	-	25/50	25/80

Coordination with loadbreak disconnect switches

Record Plus™ circuit breakers excel in their characteristics as current and energy limiting devices. This allows one to use lighter and more economical downstream busbar systems and switchgear.

A frequently used combination is that of a ***Record Plus™*** breaker, used as a protection and switching device in the mains switchboard, and a Dilos loadbreak switch, as an incomer, in a downstream, secondary switchboard. In this application the Dilos needs to be able to withstand the current and energy values on a short-circuit event, this taking the limiting effects of the upstream breaker into account.

The table indicates the maximum prospective short-circuit that the combination of an upstream ***Record Plus™*** and a downstream Dilos or ***Record Plus™*** in its switch disconnect variant (type **Y**) can withstand.

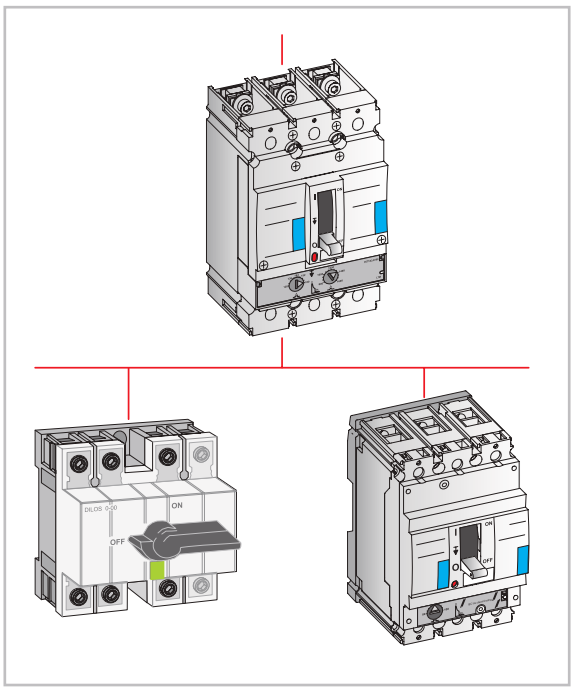

Protection of Switch Disconnectors (Dilos or Record Plus) with Record Plus circuit breakers - Valid for 400/415V AC

Upstream *Record Plus™* circuit breaker	Breaking capacity, Icu=Ics (kA eff.)	Downstream Dilos switch	Maximum allowable short-circuit (kA eff.) of combination	Downstream *Record Plus™* switch	Maximum allowable short-circuit (kA eff.) of combination
FD160S	36	Dilos 1 & 1H	18	FD63Y	36
		Dilos 2	18	FD160Y	36
FD160N	50	Dilos 1 & 1H	25	FD63Y	50
		Dilos 2	25	FD160Y	50
FD160H	80	Dilos 1 & 1H	30	FD63Y	80
		Dilos 2	30	FD160Y	80
FD160L	150	Dilos 1 & 1H	36	FD63Y	150
		Dilos 2	36	FD160Y	150
FE160N	50	Dilos 1 & 1H	25	FD63Y	50
		Dilos 2	25	FD160Y	50
FE160H	80	Dilos 1 & 1H	30	FD63Y	80
		Dilos 2	30	FD160Y	80
FE160L	150	Dilos 1 & 1H	36	FD63Y	150
		Dilos 2	36	FD160Y	150
FE250N	50	Dilos 3	50	FE250Y	50
FE250H	80	Dilos 3	80	FE250Y	80
FE250L	150	Dilos 3	150	FE250Y	150
FG400N	50	Dilos 4	50	FG400Y	50
FG400H	80	Dilos 4	80	FG400Y	80
FG400L	150	Dilos 4	150	FG400Y	150
FG630N	50	Dilos 4	50	FG630Y	50
FG630H	80	Dilos 4	80	FG630Y	80
FG630L	150	Dilos 4	150	FG630Y	150
FK800N	50	Dilos 6	50	FK800Y	50
FK800H	80	Dilos 6	80	FK800Y	80
FK1250N	50	Dilos 6	50	FK1250Y	50
FK1250H	80	Dilos 6	80	FK1250Y	80
FK1600N	50	Dilos 7	50	FK1600Y	50
FK1600H	80	Dilos 7	80	FK1600Y	80

Protection of motor circuits

General
In a circuit that provides power to a motor a number of protective and control devices are normally present. The combination of these devices must be coordinated to ensure the efficiency and an optimal protection of the motor. Here, the protection of such circuits strongly depends on the operational requirements, as the application for which the motor is used, the required starting frequency, the required service level and the applicable safety standards.

Protection of the electrical circuit
The motor circuit must provide the following functionality:

- Isolate the circuit from the network for maintenance.
- Protect against short-circuits in the equipment, the starter and the cables within the circuit.
- Protect against overloads in the equipment, the starter and the cables within the circuit.
- Protect against faults specific to the motor within it's application.

Control of the motor in question, this covering starting, stopping, speed control etc.

Standards
The requirements for circuits supplying a motor, in general called "motor starters", can be found in the IEC 60947-4-1. To define the components for isolation, overload and short-circuit protection the following elements must be defined:

- Depending on the type of electrical motor and it's operational requirements, four motor utilization categories have been defined. These have an impact on the characteristics of the control element within the circuit. These so called AC classes are depicted in the table on the right.
- The required trip curve class of the overload protection, this depending on the motor application, the classes 10A, 10, 20 and 30 are normally used, the requirements for which are indicated in the table.

- Isolation and safety during maintenance. Use of the ***Record Plus™*** breaker here provides an enhancement of the present standard requirement for **POSITIVE OFF** adding in a **POSITIVE ON** indication.

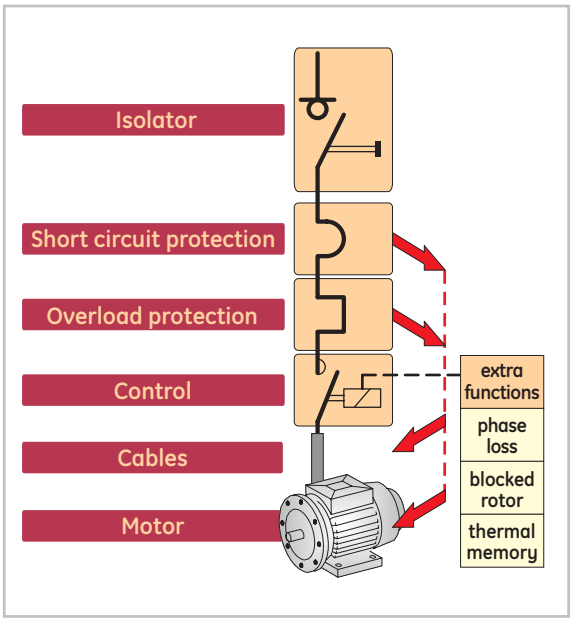

Category	Load type	Contactor usage
AC1	Non Inductive motors	Energization
AC2	Slip ring motors	Starting Switching off whilst running Regenerative breaking Inching
AC3	Squirrel-cage motors	Energization Switching off whilst running
AC4	Squirrel-cage motors (cos phi = 0.45 ≤ 100A) (cos phi = 0.35 > 100A)	Starting Switching off whilst running Regenerative breaking Plugging Inching

	Required tripping times at		
Trip class	1.2 x In	1.5 x In	7.2 x In
10A	t < 2 hours	t < 2 min.	2 ≤ t ≤ 10 sec.
10	t < 2 hours	t < 4 min.	4 ≤ t ≤ 10 sec.
20	t < 2 hours	t < 8 min.	6 ≤ t ≤ 20 sec.
30	t < 2 hours	t < 12 min.	9 ≤ t ≤ 30 sec.

Coordination
The standards require tests to define the coordination between the devices within the motor starter. Depending on the state of the components after the test two coordination classes 1 and 2 have been defined.

The unique properties of the ***Record Plus™*** breaker allow GE to offer solutions meeting the highest standards. For this reason all tables published here only refer to **coordination type 2**.

This entails that the GE equipment meets the following standards

- No or minor weldings of the contactors after testing; contact separation is simple and easy
- The switchgear and controlgear are fully operational after the tests indicated here.

Solutions with the *Record Plus™* breaker
Motor starters are compiled with a number of GE components. This is to offer the required functionality of the motor starter circuit and to allow a choice in the execution thereof.

Coordination type 2 test sequence

Motor current Ie (AC3)	Test with current "r"
Ie ≤ 16A	1 kA
16 < Ie ≤ 63A	3 kA
63 < Ie ≤ 125A	5 kA
125 < Ie ≤ 315A	10 kA
315 < Ie ≤ 630A	18 kA

- After this test the original characterstics of the contactor and thermal relay MUST remain unchanged.
- After this test the short-circuit protection must trip within 10 ms at a fault current ≥ 15 x In.

Short-circuit test

This value which is generally ≤ 50kA is used to check the coordination of the devices used in the motor starter circuit. For each combination with ***Record Plus™*** breakers this value is mentioned in the tables on pages E.31, E.32, E.33, E.34 and E.35.
After a test with this current the following conditions must be met:

- No or minor weldings of the contactors after testing; contact separation is simple and easy
- The switchgear and controlgear are fully operational after the test.

Option 1

Magnetic only circuit breaker as the short-circuit protection device.

Contactor for control purposes.

Separate thermal relay for class 10 or class 30 as overload protection.

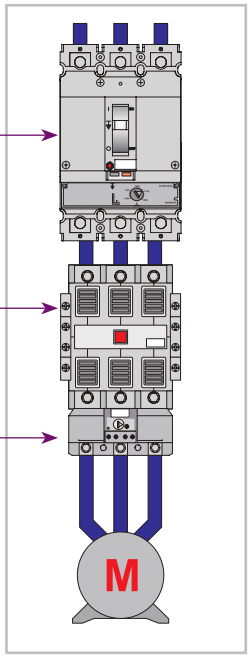

Option 2

Electronic circuit breaker as the short-circuit and Overload protection device.

Contactor for control purposes.

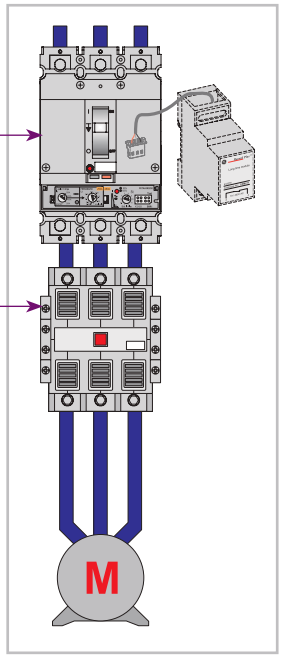

After power is disconnected (circuit interruption after a fault) the breaker has no thermal memory function. This implies that after an overload, immediate breaker reset and re-energization of the circuit is possible.
In order to prevent this a Long time module can be utilized that closes a contact on an overload just before the breaker trips. This allowing the contactor in the circuit to be de-energized and a external thermal memory to be initialized, before the breaker trips.

The sketch here depicts the long time module as an optional add on in the circuit diagram. Here the breaker is the short-circuit protection device **AND** a backup overload protection. If the contactor fails to open on a long time module signal the breaker will trip.

Coordination type II - EN 60947-4 - Class 10 protection

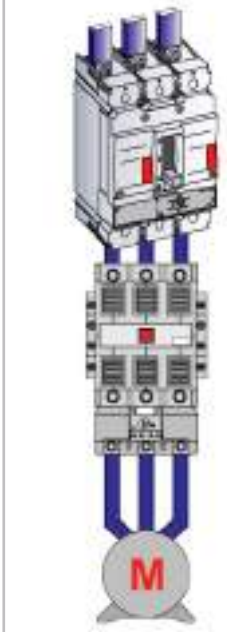

Short-circuit Protection by means of Magnetic Only MCCB.

Overload Protection by means of a direct heated electromechanical thermal relay

Phase Loss protection (Thermal relay feature)

Control by GE contactor

Upstream *Record Plus*™ Breaker selection							
Type	N	H	L	Type	N	H	L
	Icc values in kA Ue=230V AC				Icc values in kA Ue=400/415V AC		
FD160	85	100	130	FD160	50	80	130
FE160/250	85	100	130	FE160/250	50	80	130
FG 400/630	85	100	130	FG 400/630	50	80	130
FK 800/1250	85	100	130	FK 800/1250	50	80	100

Selection of associated components[1]											
Motor		Breaker details			Contactor	Motor		Breaker details			Contactor
P(kw)	In	Type	Ie	Im	Type+O.R.	P(kw)	In	Type	Ie	Im	Type
0.37	2.0	FD/FE160	3[2]	30	CL25+RT1J						
0.55	2.8	FD/FE160	3[2]	36	CL25+RT1K						
0.75	3.5	FD/FE160	3[2]	70	CL25+RT1K	0.75	2.0	FD/FE160	3[2]	30	CL25+RT1J
1.1	5.0	FD/FE160	7	70	CL03+RT12L	1.1	2.6	FD/FE160	3[2]	33	CL25+RT1K
1.5	6.1	FD/FE160	7	80	CL03+RT1M	1.5	3.6	FD/FE160	7	70	CL03+RT1K
2.2	8.7	FD/FE160	12.5[3]	125	CL06+RT2AN	2.2	5.0	FD/FE160	7	80	CL03+RT12L
3	11.5	FD/FE160	12.5[3]	150	CL06+RT2AN	3	6.6	FD/FE160	7	86	CL03+RT1M
4	14.5	FD/FE160	20[3]	200	CL06+RT2B	4	8.3	FD/FE160	12.5[3]	125	CL06+RT2AN
5.5	20.0	FD/FE160	20[3]	260	CL06-RT2C	5.5	11.5	FD/FE160	12.5[3]	150	CL06+RT2AN
7.5	28	FD/FE160	30[4]	364	CL06-RT2D	7.5	16.1	FD/FE160	20[3]	200	CL06+RT2B
10	36	FD/FE160	50	500	CL06+RT2E	10	21	FD/FE160	30[4]	300	CL06-RT2C
11	39	FD/FE160	50	507	CL06+RT2E	11	22	FD/FE160	30[4]	300	CL06-RT2C
15	50	FD/FE160	50	650	CL06+RT2G	15	30	FD/FE160	30[4]	390	CL06-RT2D
18.5	64	FD/FE160	80[5]	832	CL09+RT2J	18.5	37	FD/FE160	50	478	CL06+RT2E
22	75	FD/FE160	80[5]	975	CL09+RT2J	22	43	FD/FE160	50	561	CL06+RT2G
25	85	FD/FE160	100	1020	CL09+RT2L	25	49	FD/FE160	50	635	CL06+RT2G
30	100	FD160	100	1300	CL09+RT2M	30	58	FD/FE160	80[5]	800	CL09+RT2H
30	100	FE160	100	1300	CK75C+RT2M	37	72	FD/FE160	80[5]	934	CL09+RT2J
37	125	FE160	125	1625	CK85B+RT3E	45	86	FD160	100	1121	CL09+RT2L
45	150	FE160	160	1950	CK85B+RT3F	45	86	FE160	100	1121	CK75C+RT2L
55	180	FE250	250	2500	CK95B+RT3F	55	104	FE160	125	1346	CK85B+RT3E
75	250	FG400	250	3250	CK10B+RT4P	75	144	FE160	160	1869	CK85B+RT3F
90	312	FG400	400	4056	CK10B+RT5C	90	179	FE250	250	2500	CK95B+RT4N
110	360	FG400	400	4680	CK12B+RT5C	110	207	FE250	250	2691	CK10B+RT4P
132	430	FG630	500	5590	CK12B+RT5D	132	247	FG400	250	3214	CK10B+RT4R
160	520	FK800	800	6760	CK13B+RT5E	160	300	FG400	400	3900	CK10B+RT5C
200	630	FK800	800	6930	CK13B+RT5E	200	360	FG400	400	4680	CK12B+RT5C
-	-	-	-	-	-	220	400	FG630	500	5200	CK12B+RT5D
-	-	-	-	-	-	250	462	FG630	500	6004	CK12B+RT5D
-	-	-	-	-	-	300	560	FK800	800	6720	CK13B+RT5E
-	-	-	-	-	-	315	582	FK800	800	6985	CK13B+RT5C
-	-	-	-	-	-	335	619	FK800	800	6810	CK13B+RT5C

(1) The contactor has a breaking capacity that is sufficient to operate the specified motor up to the specified magnetic setting of the breaker
(2) The 3Amp device is designed to operate at a current level up to 3.5Amps
(3) FD160 type; contactor size can be reduced to CL04
(4) FD160 type; contactor size can be reduced to CL45
(5) FD160 type; contactor size can be reduced to CL08

Coordination type II - EN 60947-4 - Class 10 protection

Upstream *Record Plus*™ Breaker selection

Type	N	H	L	Type	N	H	L	Type	N	H	L
	Icc values in kA Ue=440V AC				Icc values in kA Ue=500/525V AC				Icc values in kA Ue=690V AC		
FD160	30	50	80	FD160	-	36	50	FD160	-	6	Tests pending
FE160/250	42	65	130	FE160/250	-	50	80	FE160/250	-	22	
FG 400/630	42	65	130	FG 400/630	-	50	80	FG 400/630	-	22	
FK 800/1250	42	65	80	FK 800/1250	-	36	50	FK 800/1250	-	22	

Selection of associated components[1]

Motor		Breaker details			Contactor	Motor		Breaker details			Contactor	Motor		Breaker details			Contactor
P(kw)	In	Type	Ie	Im	Type+O.R.	P(kw)	In	Type	Ie	Im	Type+O.R.	P(kw)	In	Type	Ie	Im	Type+O.R.
0.8	1.9	FD/FE160	3[2]	30	CL25+RT1J	0.8	1.5	FD/FE160	3[2]	30	CL25+RT1H						
1.1	2.5	FD/FE160	3[2]	30	CL25+RT1K	1.1	2.0	FD/FE160	3[2]	30	CL25+RT1J	1.5	2.0	FD/FE160	3[2]	30	CL25+RT1J
1.5	3.4	FD/FE160	3[2]	70	CL25+RT1K	1.5	2.6	FD/FE160	3[2]	40	CL25+RT1K	2.2	2.9	FD/FE160	3[2]	38	CL25+RT1K
2.2	4.6	FD/FE160	7	70	CL03+RT12L	2.2	3.8	FD/FE160	7	70	CL03+RT12L	3	3.5	FD/FE160	3[2]	70	CL25+RT1K
3	6.0	FD/FE160	7	78	CL03+RT1M	3	5.0	FD/FE160	7	70	CL03+RT1M	3.7	4.6	FD/FE160	7	70	CL03+RT12L
4	7.6	FD/FE160	12.5[3]	100	CL06+RT2AN	4	6.5	FD/FE160	7	85	CL03+RT1M	4	5.0	FD/FE160	7	70	CL03+RT12L
5.5	10.5	FD/FE160	12.5[3]	136	CL03+RT2AN	5.5	9.0	FD/FE160	12.5[3]	125	CL06+RT2AN	5.5	7.0	FD/FE160	7	91	CL03+RT12M
7.5	14.6	FD/FE160	20[3]	200	CL06+RT2B	7.5	12.0	FD/FE160	12.5[3]	156	CL06+RT2BP	7.5	9.0	FD/FE160	12.5[3]	125	CL07+RT2AN
10	18.8	FD/FE160	20[3]	245	CL06+RT2B	10	15.0	FD/FE160	20[3]	200	CL06+RT2B	11	12.5	FD/FE160	12.5[3]	163	CL07+RT2BP
11	20	FD/FE160	30[4]	300	CL06-RT2C	11	18.4	FD/FE160	20[3]	300	CL06-RT2B	13	16.0	FD/FE160	20[3]	208	CL07+RT2B
15	27	FD/FE160	30[4]	355	CL06-RT2D	15	23	FD/FE160	30[4]	300	CL06-RT2C	15	18.0	FD/FE160	20[3]	234	CL07+RT2B
18.5	33	FD/FE160	50	500	CL06+RT2E	18.5	29	FD/FE160	30[4]	371	CL06-RT2D	18.5	23	FD/FE160	30[4]	300	CL09+RT2C
22	39	FD/FE160	50	510	CL06+RT2E	22	33	FD/FE160	50	500	CL06+RT2E	22	25	FD/FE160	30[4]	325	CL09+RT2D
25	44	FD/FE160	50	578	CL06+RT2G	-	-	-	-	-	-	-	-	-	-	-	-
30	52	FD/FE160	80	680	CL09+RT2H	30	45	FD/FE160	50	585	CL06+RT2G	30	35	FD/FE160	50	500	CL09+RT2E
37	65	FD/FE160	80	849	CL09+RT2J	37	55	FD/FE160	80[5]	800	CL09+RT2J	37	42	FD/FE160	50	546	CL09+RT2E
45	78	FD/FE160	80	1019	CL09+RT2J	45	65	FD/FE160	100	1000	CL09+RT2J	45	49	FD/FE160	50	637	CL09+RT2G
55	86	FD160	100	1223	CL09+RT2L	55	80	FD160	100	1100	CL09+RT2S	55	60	FD/FE160	80[5]	800	CL09+RT2J
55	94	FE160	100	1223	CK75C+RT2L	55	80	FE160	100	1100	CK75C+RT2J	75	80	FD/FE160	80[5]	1040	CL09+R2TL
75	131	FE160	160	1699	CK85B+RT3E	75	110	FE160	125	1430	CK85B+RT3D	90	100	FD160	100	1300	CL09+R2TL
90	163	FE250	250	2500	CK95B+RT3F	90	130	FE160	160	1690	CK95B+RT3E	90	100	FE160	100	1300	CK85B+RT2M
110	188	FE250	250	2500	CK95B+RT4P	110	156	FE160	160	2028	CK95B+RT3F	110	120	FE160	125	1560	CK85B+RT3E
132	225	FE250	250	2922	CK95B+RT4R	132	190	FE250	250	2500	CK95B+RT4P	132	140	FE160	160	1820	CK95B+RT3F
160	300	FG400	400	3900	CK10B+RT5C	160	228	FE250	250	2964	CK95B+RT4R	160	175	FE250	250	2100	CK95B+RT4N
200	360	FG400	400	4680	CK12B+RT5C	200	281	FG400	400	3653	CK10B+RT5C	200	220	FE250	250	2860	CK10B+RT4R
220	400	FG630	500	5200	CK12B+RT5D	220	310	FG400	400	4030	CK10B+RT5C	220	240	FG400	250	3120	CK10B+RT4R
250	462	FG630	500	6004	CK12B+RT5D	-	-	-	-	-	-	250	270	FG400	400	3510	CK10B+RT5C
300	509	FK800	800	6619	CK13B+RT5E	-	-	-	-	-	-	-	-	-	-	-	-
315	529	FK800	800	6880	CK13B+RT5E	315	445	FG630	500	5785	CK12B+RT5D	-	-	-	-	-	-
335	563	FK800	800	6754	CK13B+RT5E	335	460	FG630	500	5980	CK12B+RT5D	335	335	FG400	400	4355	CK10B+RT5C
355	596	FK800	800	6560	CK13B+RT5E	355	500	FK800	800	6500	CK13B+RT5E	-	-	-	-	-	-
375	630	FK800	800	6930	CK13B+RT6A	375	530	FK800	800	6890	CK13B+RT5E	375	400	FG630	500	5200	CK12B+RT5D
-	-	-	-	-	-	400	570	FK800	800	6840	CK13B+RT5E	-	-	-	-	-	-
-	-	-	-	-	-	450	630	FK800	800	7560	CK13B+RT6A	450	480	FG630	500	6240	CK12B+RT5D
-	-	-	-	-	-	-	-	-	-	-	-	500	530	FK800	800	6360	CK13B+RT5E
-	-	-	-	-	-	-	-	-	-	-	-	560	580	FK800	800	6380	CK13B+RT5E

Coordination type II - EN 60947-4 - Class 10 protection (with SMR2 other classes possible)

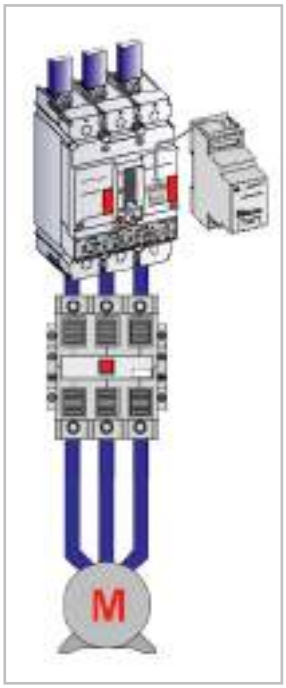

Short-circuit and Overload protection by means of Electronic MCCB.
Phase Loss protection (in MCCB)

Overload backup protection, and overload alarm on use of LT module.
Control by GE contactor

Upstream *Record Plus*™ Breaker selection							
Type	N	H	L	Type	N	H	L
	Icc values in kA Ue=230V AC				Icc values in kA Ue=400/415V AC		
FE160/250	85	100	130	FE160/250	50	80	130
FG 400/630	85	100	130	FG 400/630	50	80	130

Selection of associated components[1]											
Motor		Breaker details			Contactor	Motor		Breaker details			Contactor
P(kw)	In	Type	Ie	Ist	Type	P(kw)	In	Type	Ie	Im	Type
3	11.5	**FE160**	25	150	**CL08**	-	-	**-**	-	-	**-**
4	14.5	**FE160**	25	189	**CL08**	-	-	**-**	-	-	**-**
5.5	20	**FE160**	25	260	**CL08**	5.5	11.5	**FE160**	25	150	**CL08**
7.5	28	**FE160**	63	364	**CL09**	7.5	16.1	**FE160**	25	200	**CL08**
10	36	**FE160**	63	468	**CL09**	10	21	**FE160**	25	300	**CL08**
11	39	**FE160**	63	507	**CL09**	11	22	**FE160**	25	300	**CL08**
15	50	**FE160**	63	650	**CL09**	15	30	**FE160**	63	390	**CL09**
18.5	64	**FE160**	125	832	**CK85B**	18.5	37	**FE160**	63	478	**CL09**
22	75	**FE160**	125	975	**CK85B**	22	43	**FE160**	63	561	**CL09**
25	85	**FE160**	125	1105	**CK85B**	25	49	**FE160**	63	635	**CL09**
30	100	**FE160**	125	1300	**CK85B**	30	58	**FE160**	63	800	**CL09**
37	125	**FE160**	160	1625	**CK95B**	37	72	**FE160**	125	934	**CK85B**
45	150	**FE160**	160	1950	**CK95B**	45	86	**FE160**	125	1121	**CK85B**
55	180	**FE250**	250	2340	**CK95B**	55	104	**FE160**	125	1346	**CK85B**
75	250	**FG400**	250	3000	**CK95B**	75	144	**FE160**	160	1869	**CK85B**
90	312	**FG400**	400	4056	**CK10C**	90	179	**FE250**	250	2500	**CK95B**
110	360	**FG400**	400	4680	**CK12B**	110	207	**FE250**	250	2691	**CK95B**
132	430	**FG630**	500	5590	**CK12B**	132	247	**FG400**	250	2967	**CK95B**
-	-	**-**	-	-	**-**	160	300	**FG400**	400	3900	**CK10C**
-	-	**-**	-	-	**-**	200	360	**FG400**	400	4680	**CK12B**
-	-	**-**	-	-	**-**	220	400	**FG630**	500	5200	**CK12B**
-	-	**-**	-	-	**-**	250	462	**FG630**	500	6004	**CK12B**

(1) The contactor has a breaking capacity that is sufficient to operate the specified motor up to the specified magnetic setting of the breaker

Coordination type II - EN 60947-4 - Class 10 protection (with SMR2 other classes possible)

Upstream *Record Plus*™ Breaker selection												
Type	N	H	L	Type	N	H	L	Type	N	H	L
	Icc values in kA Ue=440V AC								Icc values in kA Ue=690V AC		
FE160/250	42	65	130	FE160/250	-	50	80	FE160/250	-	22	50
FG 400/630	50	65	130	FG 400/630	-	50	80	FG 400/630	-	22	50

Selection of associated components[1]																	
Motor		Breaker details			Contactor	Motor		Breaker details			Contactor	Motor		Breaker details			Contactor
P(kw)	In	Type	Ie	Im	Type	P(kw)	In	Type	Ie	Im	Type	P(kw)	In	Type	Ie	Im	Type
-	-	-	-	-	-	-	-	-	-	-	-	-	-	-	-	-	-
-	-	-	-	-	-	-	-	-	-	-	-	-	-	-	-	-	-
5.5	10.5	FE160	25	136	CL08	-	-	-	-	-	-	-	-	-	-	-	-
7.5	14.6	FE160	25	200	CL08	7.5	12.0	FE160	25	156	CL09	-	-	-	-	-	-
10	18.8	FE160	25	245	CL08	10	15.0	FE160	25	200	CL09	10	11.5	FE160	25	150	CK85B
11	20	FE160	25	265	CL08	11	18.4	FE160	25	300	CL09	-	-	-	-	-	-
15	27	FE160	63	355	CL09	15	23	FE160	25	300	CL09	15	17.1	FE160	25	223	CK85B
18.5	33	FE160	63	500	CL09	18.5	29	FE160	63	371	CL10	18.5	20	FE160	25	260	CK85B
22	39	FE160	63	510	CL09	22	33	FE160	63	423	CL10	-	-	-	-	-	-
25	44	FE160	63	578	CL09	-	-	-	-	-		-	-	-	-	-	-
30	52	FE160	63	680	CL09	30	45	FE160	63	585	CL10	30	35	FE160	63	500	CK85B
37	65	FE160	125	849	CK85B	37	55	FE160	63	800	CL10	37	42	FE160	63	546	CK85B
45	78	FE160	125	1019	CK85B	-	-	-	-	-	-	45	49	FE160	63	637	CK85B
55	94	FE160	125	1223	CK85B	55	80	FE160	125	1040		55	60	FE160	63	800	CK85B
75	131	FE160	160	1699	CK85B	75	110	FE160	125	1430	CK85B	75	80	FE160	125	1040	CK85B
90	163	FE250	250	2500	CK95B	90	130	FE160	160	1690	CK85B	90	100	FE160	125	1300	CK85B
110	188	FE250	250	2500	CK95B	110	156	FE160	160	2028	CK85B	110	120	FE160	125	1560	CK85B
132	225	FE250	250	2922	CK95B	132	190	FE250	250	2500	CK95B	132	140	FE160	160	1820	CK85B
160	300	FG400	400	3900	CK10C	160	228	FE250	250	2964	CK95B	160	175	FE250	250	2275	CK10C
200	360	FG400	400	4680	CK12B	200	281	FG400	400	3653	CK10C	200	220	FE250	250	2860	CK10C
220	400	FG630	500	5200	CK12B	220	310	FG400	400	4030	CK10C	220	240	FG400	250	3120	CK10C
250	462	FG630	500	6004	CK12B	-	-	-	-	-	-	250	270	FG400	400	3510	CK10C
-	-	-	-	-	-	-	-	-	-	-	-	-	-	-	-	-	-
-	-	-	-	-	-	315	445	FG630	500	5785	CK12B	-	-	-	-	-	-
-	-	-	-	-	-	335	460	FG630	500	5980	CK12B	335	335	FG400	400	4355	CK10C
-	-	-	-	-	-	355	500	FG630	500	6500	CK12B	-	-	-	-	-	-
-	-	-	-	-	-	-	-	-	-	-	-	375	400	FG630	500	5200	CK12B
-	-	-	-	-	-	-	-	-	-	-	-	-	-	-	-	-	-
-	-	-	-	-	-	-	-	-	-	-	-	450	480	FG630	500	6240	CK12B

(1) The contactor has a breaking capacity that is sufficient to operate the specified motor up to the specified magnetic setting of the breaker

Coordination type II - EN 60947-4 - Class 20[3] protection

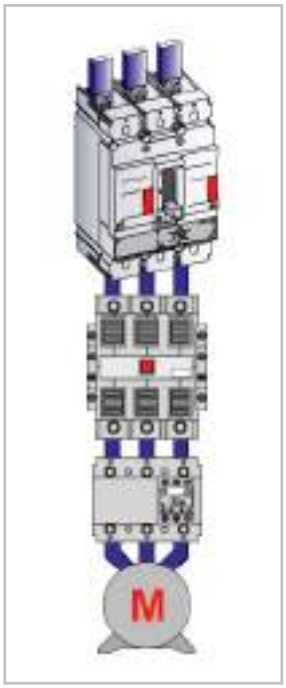

Short-circuit Protection by means of Magnetic Only MCCB.
Overload Protection by means of a electromechanical thermal relay.

Phase Loss protection (Thermal relay feature)

Control by GE contactor

Upstream *Record Plus*™ Breaker selection						
Type	N	H	L	Type	N	H	L
	Icc values in kA Ue=230V AC				Icc values in kA Ue=400/415V AC		
FD160	85	100	130	FD160	50	80	130
FE160/250	85	100	130	FE160/250	50	80	130
FG 400/630	85	100	130	FG 400/630	50	80	130
FK 800/1250	85	100	130	FK 800/1250	50	80	100

Selection of associated components[1]											
Motor		Breaker details			Contactor	Motor		Breaker details			Contactor
P(kw)	In	Type	Ie	Im	Type+O.R.	P(kw)	In	Type	Ie	Im	Type+O.R.
0.37	2.0	FD/FE160	3[2]	35	CL25+RT12J						
0.55	2.8	FD/FE160	3[2]	35	CL25+RT12K						
0.75	3.5	FD/FE160	3[2]	46	CL25+RT12K	0.75	2.0	FD/FE160	3[2]	35	CL25+RT12J
1.1	5.0	FD/FE160	7	70	CL03+RT12L	1.1	2.6	FD/FE160	3[2]	35	CL25+RT12K
1.5	6.1	FD/FE160	7	80	CL03+RT12M	1.5	3.6	FD/FE160	7	70	CL03+RT12K
2.2	8.7	FD/FE160	12.5[4]	125	CL06+RT2AN	2.2	5.0	FD/FE160	7	80	CL03+RT12L
3	11.5	FD/FE160	12.5[4]	150	CL06+RT2AN	3	6.6	FD/FE160	7	86	CL03+RT12M
4	14.5	FD/FE160	20[4]	200	CL06+RT2B	4	8.3	FD/FE160	12.5[4]	125	CL06+RT2AN
5.5	20.0	FD/FE160	20[4]	260	CL06-RT2C	5.5	11.5	FD/FE160	12.5[4]	150	CL06+RT2AN
7.5	28	FD/FE160	30[5]	364	CL06-RT22D	7.5	16.1	FD/FE160	20[4]	200	CL06+RT2B
10	36	FD/FE160	50	500	CL06+RT22E	10	21	FD/FE160	30[5]	300	CL06-RT2C
11	39	FD/FE160	50	507	CL06+RT22E	11	22	FD/FE160	30[5]	300	CL06-RT2C
15	50	FD/FE160	50	650	CL06+RT22G	15	30	FD/FE160	30[5]	390	CL06-RT22D
18.5	64	FD/FE160	80[6]	832	CL09+RT22J	18.5	37	FD/FE160	50	478	CL06+RT22E
22	75	FD/FE160	80[6]	975	CL09+RT22J	22	43	FD/FE160	50	561	CL06+RT22G
25	85	FD/FE160	100	1020	CL09+RT22L	25	49	FD/FE160	50	635	CL06+RT22G
30	100	FD160	100	1300	CL09+RT22M	30	58	FD/FE160	80[6]	800	CL09+RT22H
30	100	FE160	100	1300	CK75C+RT22M	37	72	FD/FE160	80[6]	934	CL09+RT22J
37	125	FE160	125	1625	CK85B+RT32E	45	86	FD160	100	1121	CL09+RT22L
45	150	FE160	160	1950	CK85B+RT32F	45	86	FE160	100	1121	CK75C+RT22L
55	180	FE250	250	2500	CK95B+RT32F	55	104	FE160	125	1346	CK85B+RT32E
75	250	FG400	250	3250	CK10B+RT5LB	75	144	FE160	160	1869	CK85B+RT32F
90	312	FG400	400	4056	CK10B+RT5LB	90	179	FE250	250	2500	CK95B+RT32F
110	360	FG400	400	4680	CK12B+RT5LC	110	207	FE250	250	2691	CK10B+RT5LB
132	430	FG630	500	5590	CK12B+RT5LD	132	247	FG400	250	3214	CK10B+RT5LB
160	520	FK800	800	6760	CK13B+RT5LE	160	300	FG400	400	3900	CK10B+RT5LB
200	630	FK800	800	6930	CK13B+RT5LE	200	360	FG400	400	4680	CK12B+RT52LC
-	-	-	-	-	-	220	400	FG630	500	5200	CK12B+RT52LD
-	-	-	-	-	-	250	462	FG630	500	6004	CK12B+RT52LD
-	-	-	-	-	-	300	560	FK800	800	6720	CK13B+RT5LE
-	-	-	-	-	-	315	582	FK800	800	6985	CK13B+RT5LE
-	-	-	-	-	-	335	619	FK800	800	6810	CK13B+RT5LE

(1) The contactor has a breaking capacity that is sufficient to operate the specified motor up to the specified magnetic setting of the breaker.
(2) The 3Amp device is designed to operate at a current level up to 3.5Amps.
(3) Class 30 on request.
(4) FD160 type; contactor size can be reduced to CL04
(5) FD160 type; contactor size can be reduced to CL45
(6) FD160 type; contactor size can be reduced to CL08

Coordination type II - EN 60947-4 - Class 20[3] protection

Upstream *Record Plus*™ Breaker selection												
Type	N	H	L	Type	N	H	L	Type	N	H	L
	Icc values in kA Ue=440V AC				Icc values in kA Ue=500/525V AC				Icc values in kA Ue=690V AC		
FD160	30	50	80	FD160	-	36	50	FD160	-	6	10
FE160/250	42	65	130	FE160/250	-	50	80	FE160/250	-	22	50
FG 400/630	42	65	130	FG 400/630	-	50	80	FG 400/630	-	22	50
FK 800/1250	42	65	80	FK 800/1250	-	36	50	FK 800/1250	-	22	30

Selection of associated components[1]																	
Motor		Breaker details			Contactor	Motor		Breaker details			Contactor	Motor		Breaker details			Contactor
P(kw)	In	Type	Ie	Im	Type+O.R.	P(kw)	In	Type	Ie	Im	Type+O.R.	P(kw)	In	Type	Ie	Im	Type+O.R.
0.75	1.9	FD/FE160	3[2]	30	CL25+RT12J	0.75	1.5	FD/FE160	3[2]	30	CL25+RT12H						
1.1	2.5	FD/FE160	3[2]	30	CL25+RT12K	1.1	2.0	FD/FE160	3[2]	30	CL25+RT12J						
1.5	3.4	FD/FE160	3[2]	70	CL25+RT12K	1.5	2.6	FD/FE160	3[2]	40	CL25+RT12K	1.5	2.0	FD/FE160	3[2]	30	CL25+RT12J
2.2	4.6	FD/FE160	7	70	CL03+RT12L	2.2	3.8	FD/FE160	7	70	CL03+RT12L	2.2	2.9	FD/FE160	3[2]	38	CL25+RT12K
3	6.0	FD/FE160	7	78	CL03+RT12M	3	5.0	FD/FE160	7	70	CL03+RT12M	3	3.5	FD/FE160	3[2]	46	CL25+RT12K
4	7.6	FD/FE160	12.5[4]	100	CL06+RT2AN	4	6.5	FD/FE160	7	85	CL03+RT12M	3.7	4.6	FD/FE160	7	70	CL03+RT12L
5.5	10.5	FD/FE160	12.5[4]	136	CL06+RT2AN	5.5	9.0	FD/FE160	12.5[4]	125	CL06+RT2AN	4	5.0	FD/FE160	7	70	CL03+RT12L
7.5	14.6	FD/FE160	20[4]	200	CL06+RT2B	7.5	12.0	FD/FE160	12.5[4]	156	CL06+RT2BP	5.5	7.0	FD/FE160	7	91	CL03+RT12M
10	18.8	FD/FE160	20[4]	245	CL06+RT2B	10	15.0	FD/FE160	20[4]	200	CL06+RT2B	7.5	9.0	FD/FE160	12.5[4]	125	CL07+RT2AN
11	20	FD/FE160	30[5]	300	CL06-RT2C	11	18.4	FD/FE160	20[4]	300	CL06-RT2B	11	12.5	FD/FE160	12.5[4]	163	CL07+RT2BP
15	27	FD/FE160	30[5]	355	CL06-RT22D	15	23	FD/FE160	30[5]	300	CL06-RT2C	13	16.0	FD/FE160	20[4]	208	CL07+RT2B
18.5	33	FD/FE160	50	500	CL06+RT22E	18.5	29	FD/FE160	30[5]	371	CL06-RT22D	15	18.0	FD/FE160	20[4]	234	CL07+RT2B
22	39	FD/FE160	50	510	CL06+RT22E	22	33	FD/FE160	50	500	CL06+RT22E	18.5	23	FD/FE160	30[5]	300	CL09+RT2C
25	44	FD/FE160	50	578	CL06+RT22G	-	-	-	-	-	-	22	25	FD/FE160	30[5]	325	CL09+RT22D
30	52	FD/FE160	80[6]	680	CL09+RT22H	30	45	FD/FE160	50	585	CL06+RT22G	-	-	-	-	-	-
37	65	FD/FE160	80[6]	849	CL09+RT22J	37	55	FD/FE160	80[6]	800	CL09+RT22J	30	35	FD/FE160	50	500	CL09+RT22E
45	78	FD/FE160	80	1019	CL09+RT22J	45	65	FD/FE160	100	1000	CL09+RT22J	37	42	FD/FE160	50	546	CL09+RT22F
55	94	FD160	100	1223	CL09+RT22L	55	80	FD160	100	1000	CL09+RT22J	45	49	FD/FE160	50	637	CL09+RT22G
55	94	FE160	100	1223	CK75C+RT22L	55	80	FE160	100	1100	CK75C+RT22J	55	60	FD/FE160	80[6]	800	CL09+RT22J
75	131	FE160	160	1699	CK85B+RT32E	75	110	FE160	125	1430	CK85B+RT32D	75	80	FD/FE160	80[6]	1040	CL09+R2T2L
90	163	FE250	250	2500	CK95B+RT32F	90	130	FE160	160	1690	CK95B+RT32E	90	100	FD/FE160	100	1300	CK85B+RT22M
110	188	FE250	250	2500	CK95B+RT5LB	110	156	FE160	160	2028	CK95B+RT32F	110	120	FE160	125	1560	CK85B+RT32E
132	225	FE250	250	2922	CK95B+RT5LB	132	190	FE250	250	2500	CK95B+RT5LB	132	140	FE160	160	1820	CK95B+RT32F
160	300	FG400	400	3900	CK10B+RT5LC	160	228	FE250	250	2964	CK95B+RT5LB	160	175	FE250	250	2100	CK95B+RT32F
200	360	FG400	400	4680	CK12B+RT5LD	200	281	FG400	400	3653	CK10B+RT5LC	200	220	FE250	250	2860	CK10B+RT5LB
220	400	FG630	500	5200	CK12B+RT5LD	220	310	FG400	400	4030	CK10B+RT5LC	220	240	FG400	250	3120	CK10B+RT5LB
250	462	FG630	500	6004	CK12B+RT5LD	-	-	-	-	-	-	250	270	FG400	400	3510	CK10B+RT5LC
300	509	FK800	800	6619	CK13B+RT5LE	-	-	-	-	-	-	-	-	-	-	-	-
315	529	FK800	800	6880	CK13B+RT5LE	315	445	FG630	500	5785	CK12B+RT5LD	-	-	-	-	-	-
335	563	FK800	800	6754	CK13B+RT5LE	335	460	FG630	500	5980	CK12B+RT5LD	335	335	FG400	400	4355	CK10B+RT5LC
355	596	FK800	800	6560	CK13B+RT5LE	355	500	FK800	800	6500	CK13B+RT5LE	-	-	-	-	-	-
375	630	FK800	800	6930	CK13B+RT5LE	375	530	FK800	800	6890	CK13B+RT5LE	375	400	FG630	500	5200	CK12B+RT5LD
-	-	-	-	-	-	400	570	FK800	800	6840	CK13B+RT5LE	-	-	-	-	-	-
-	-	-	-	-	-	450	630	FK800	800	7560	CK13B+RT5LE	450	480	FG630	500	6240	CK12B+RT5LD
-	-	-	-	-	-	-	-	-	-	-	-	500	530	FK800	800	6360	CK13B+RT5LE
-	-	-	-	-	-	-	-	-	-	-	-	560	580	FK800	800	6380	CK13B+RT5LE

Protection of LV/LV transformers

Transformers generally produce a very high inrush current. The crest value of the first half cycle may reach values of 15 to 25 times the effective rated current.
For a protective device capable of protecting these units this must be taken into account. Manufacturers data and tests have indicated that a protective device feeding a transformer must be capable of carrying the following current values without tripping (see graph insert).

Transformer value	Maximum crest inrush values		
	1st period 5 ms	2nd period 25 ms.	after 3 periods 45 ms.
< 50 kVA	25 x In	12 x In	5 x In
≥ 50 kVA	15 x In	8 x In	3.5 x In

Record Plus™ circuit breakers have been designed to cope with this kind of phenomenae. The adjacent table indicates the types to select, based on the breaker characteristics, the transformer ratings and the above mentioned inrush current prognoses.

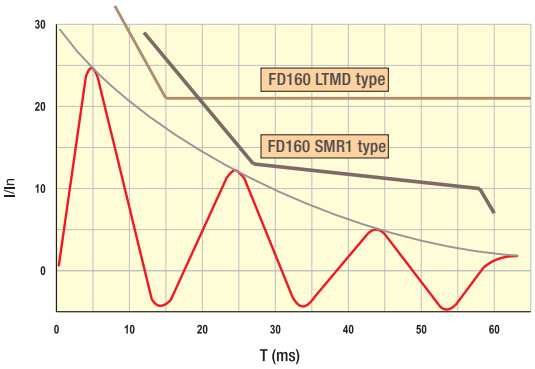

Protection of LV/LV transformers with Record Plus circuit breakers

Transformer ratings						Record Plus breaker choice		
1ph 230V		3ph 230V 1ph 400V		3ph 400V		Type	Trip unit type & rating	Ist *
kVA	In	kVA	In	kVA	In			
2.5	10	4	10	6.3	9	FD160N,FD160H or L	LTMD-25	250
4	11	5	12	8	12	FD160N,FD160H or L	LTMD-25	250
5	17	6.3	16	10	14	FD160N,FD160H or L	LTMD-32	320
		8	20	12.5	18	FD160N,FD160H or L	LTMD-32	320
6.3	27	10	24	16	23	FD160N,FD160H or L	LTMD-40	400
8	34	12.5	30	20	28	FD160N,FD160H or L	LTMD-50	500
10	42	16	39	25	35	FD160N,FD160H or L	LTMD-63	630
12.5	53	20	49	31.5	44	FD160N,FD160H or L	LTMD-80	800
		25	61	40	56	FD160N,FD160H or L	LTMD-100	1000
16	68			50	70	FD160N,FD160H or L	LTMD-125	1250
20	84	31.5	77			FD160N,FD160H or L	LTMD-125	1250
		40	98	63	89	FE160N, H or L	SMR1-125	
25	105	50	122	80	113	FE160N, H or L	SMR1-125	
31.5	133	63	154	100	141	FE160N, H or L	SMR1-160	
40	169	80	195	125	176	FE250N, H or L	SMR1-250	
50	211	100	244	160	225	FE250N, H or L	SMR1-250	
63	266	125	305	200	287	FG400N, H or L	SMR1-350	
80	338	160	390	250	352	FG400N, H or L	SMR1-350	
100	422			315	444	FG630N, H or L	SMR1-500	
125	528			400	563	FG630N, H or L	SMR1-630	
160	675			500	704	FK800N or H	SMR- 800	
				630	887	FK1250N or H	SMR-1000	
				800	1126	FK1250N or H	SMR-1250	
				1000	1408	FK1600N or H	SMR-1600	

* Magnetic threshold of breaker

Protection of capacitor banks
(power factor improvement units)

For circuit breakers and particularly for the ***Record Plus™*** device, designed to offer high making and breaking capacities under adverse conditions, the switching of capacitor banks has little to no effect on the breaker, its characteristics as a protective device, or on its lifespan.

However, the current flowing in the circuit can trip a circuit breaker and a capacitor load displays certain anomalies. In a circuit with capacitors the maximum current flow in the circuit cannot be assumed to be the calculated capacitor current only. The effective value must be increased due to harmonic content (a factor normally taken as 30%) and an allowance for the tolerances in the capacitance of the unit itself.
(10% assumed).

In order to protect these devices without running into regular nuisance tripping due to overloads please refer to the adjacent table in which the correct ***Record Plus™*** breaker is specified to protect and switch the indicated capacitor banks at several different voltages.

Un = 230V (phase to phase voltage)

Capacitor rating (kVAr)	*Record Plus* breaker	Ir setting (min)
5	FD160N, FD160H or L	18 A
7.5	FD160N, FD160H or L	27 A
10	FD160N, FD160H or L	36 A
12.5	FD160N, FD160H or L	45 A
15	FD160N, FD160H or L	54 A
20	FD160N, FD160H or L	72 A
25	FD160N, FD160H or L	90 A
30	FD160N, FD160H or L	108 A
35	FD160N or FE160N, H or L	126 A
40	FE160N, H or L	144 A
45	FE250N, H or L	162 A
50	FE250N, H or L	179 A
60	FE250N, H or L	215 A
75	FG400N, H or L	269 A
90	FG400N, H or L	323 A
100	FG400N, H or L	359 A
120	FG630N, H or L	431 A
150	FG630N, H or L	538 A
180	FK800N or H	646 A

Un = 400V (phase to phase voltage)

Capacitor rating (kVAr)	*Record Plus* breaker	Ir setting (min)
10	FD160N, FD160H or L	21 A
15	FD160N, FD160H or L	31 A
20	FD160N, FD160H or L	41 A
25	FD160N, FD160H or L	52 A
30	FD160N, FD160H or L	62 A
35	FD160N, FD160H or L	72 A
40	FD160N, FD160H or L	83 A
45	FD160N, FD160H or L	93 A
50	FD160N, FD160H or L	103 A
60	FD160N, FD160H or L	124 A
70	FD160N or FE160N, H or L	144 A
80	FE250,N,H or L	165 A
90	FE250N, H or L	186 A
100	FE250N, H or L	206 A
120	FE250N, H or L	248 A
140	FG400N, H or L	289 A
160	FG400N, H or L	330 A
180	FG400N, H or L	372 A
200	FG630N, H or L	413 A
250	FG630N, H or L	516 A
300	FG630N, H or L	619 A
350	FK800N or H	722 A

Just rel

The breaker Intro
Order codes A
Trip units B
Components & Accessories C
Technical data D
Application guide E
Wiring diagrams F
Dimensions G
Numerical Index X

F.2 FE frame, plug-in & draw-out device (8 & 10 pole connectors)
F.3 FG frame, plug-in & draw-out device (8 & 10 pole connectors)
F.4 FK frame, 3 pole & 4 pole draw-out device (6 pole connectors)
F.5 FG frame, SMR 2 trip unit connection

Recommended wiring diagrams

FD frame, plug in device (8 & 10 pole connectors)

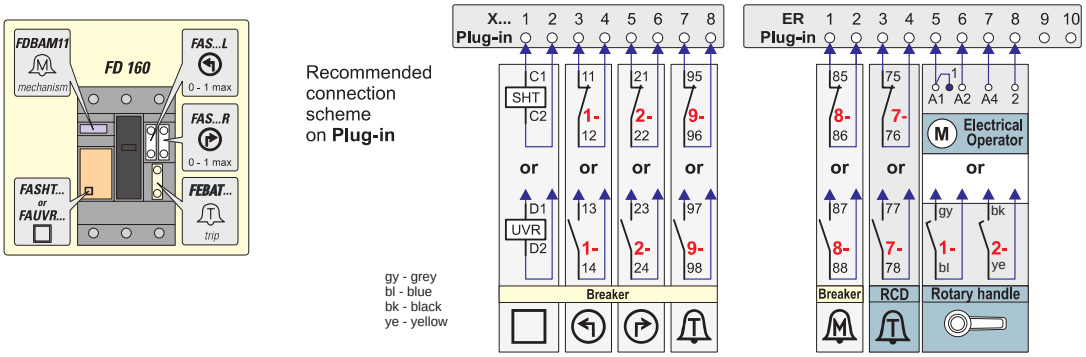

FE frame, plug-in & draw-out device (8 pole connectors)

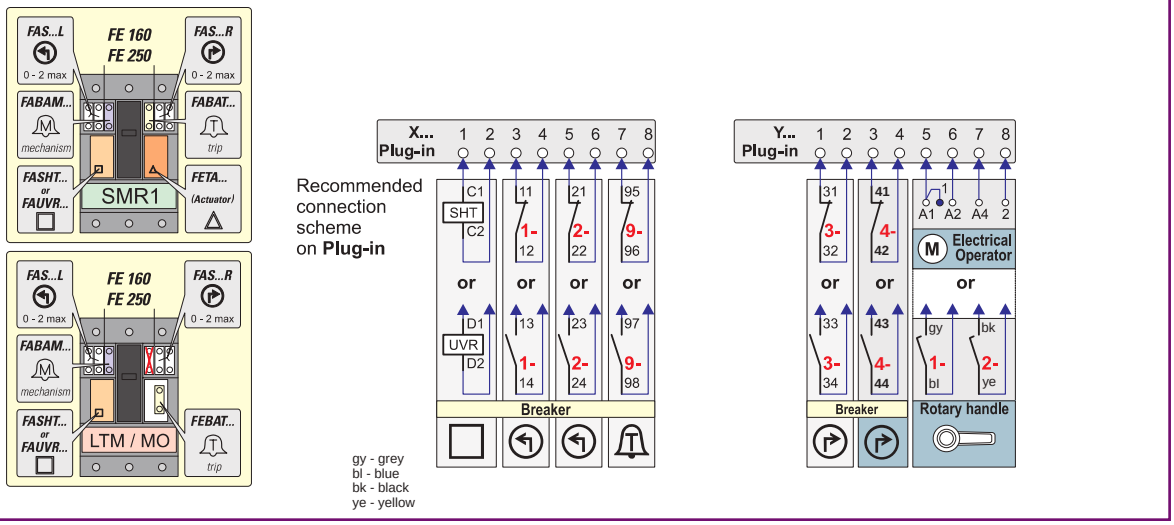

FE frame, plug-in & draw-out device (10 pole connectors)

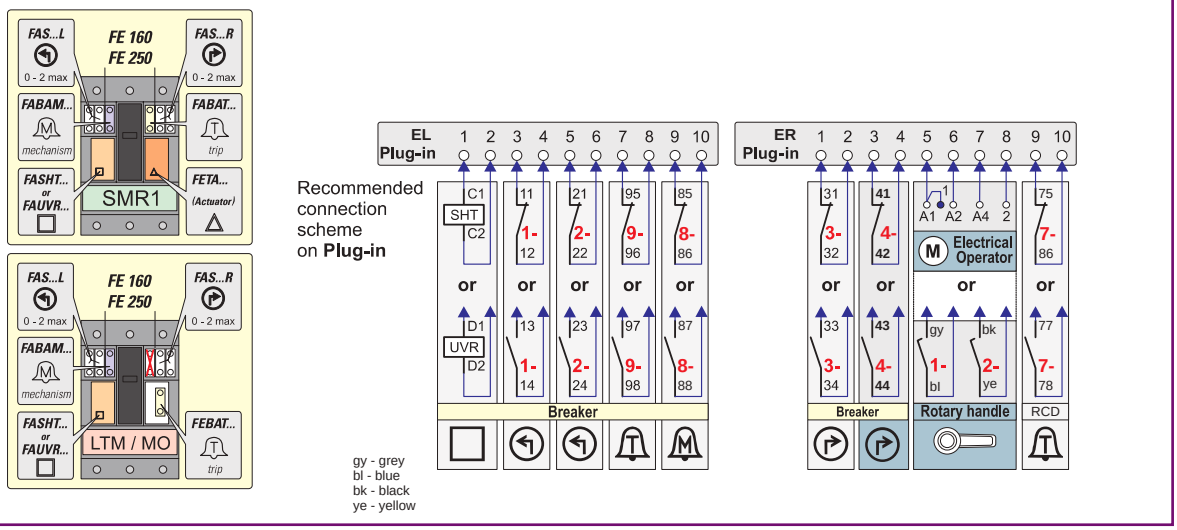

FG frame, plug-in & draw-out device (8 pole connectors)

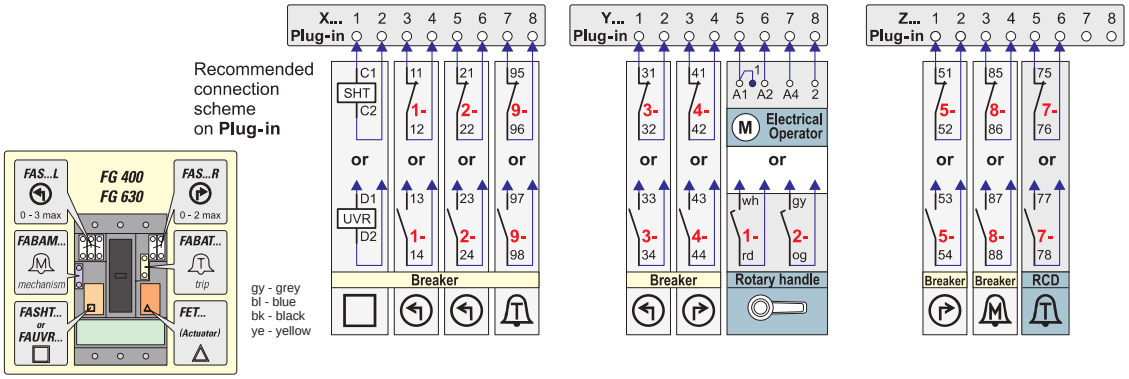

FG frame, plug-in & draw-out device (10 pole connectors)

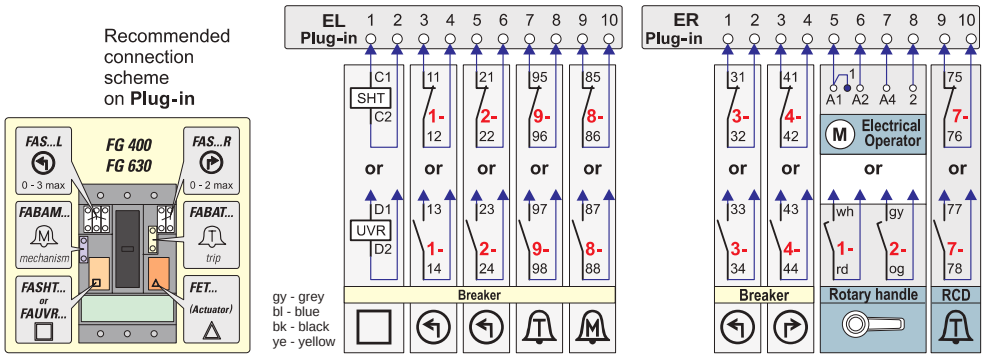

Recommended Wiring diagrams

FK frame 3 pole, draw out device (6 pole connectors)

Recommended connection scheme on **Drawout**

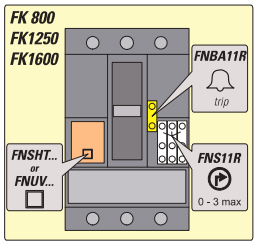

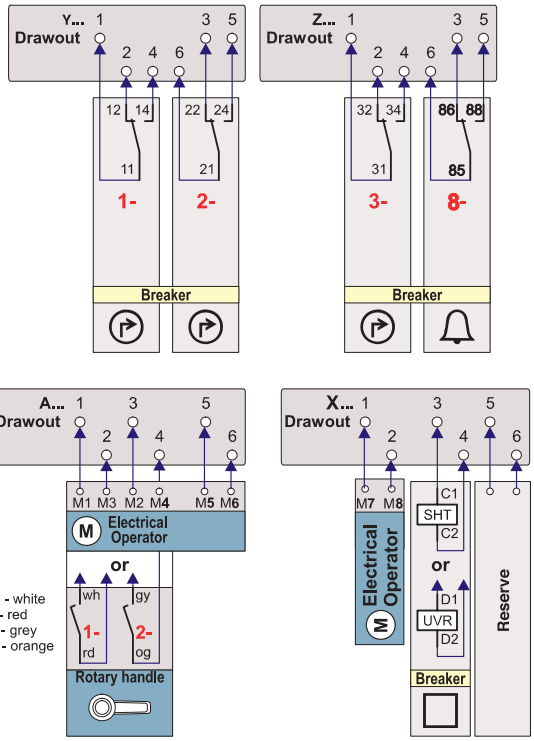

FK frame 4 pole, draw out device (6 pole connectors)

Recommended connection scheme on **Drawout**

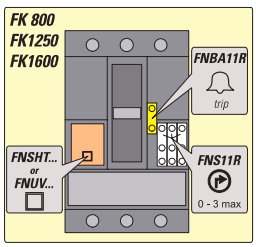

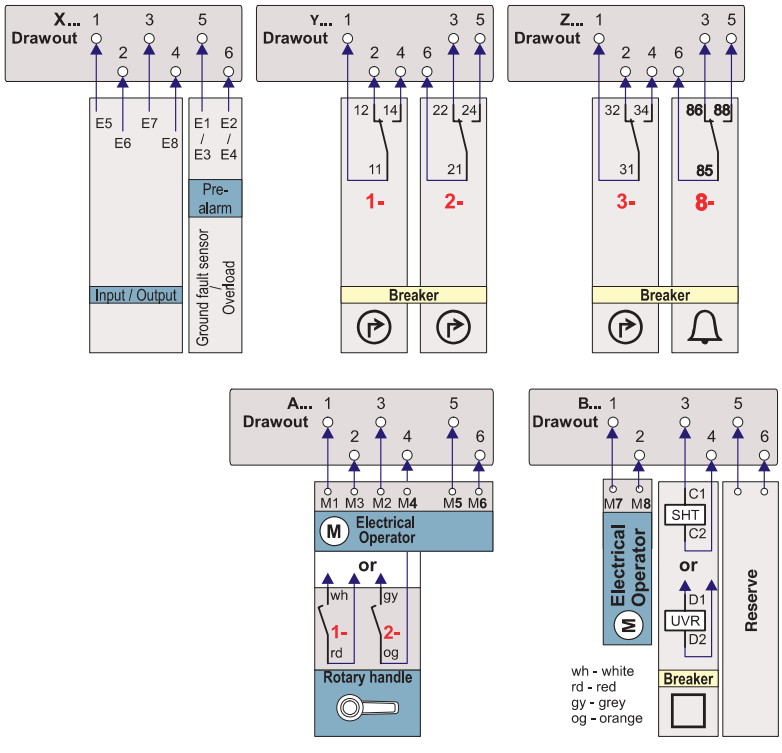

FG frame, SMR 2 trip unit connection

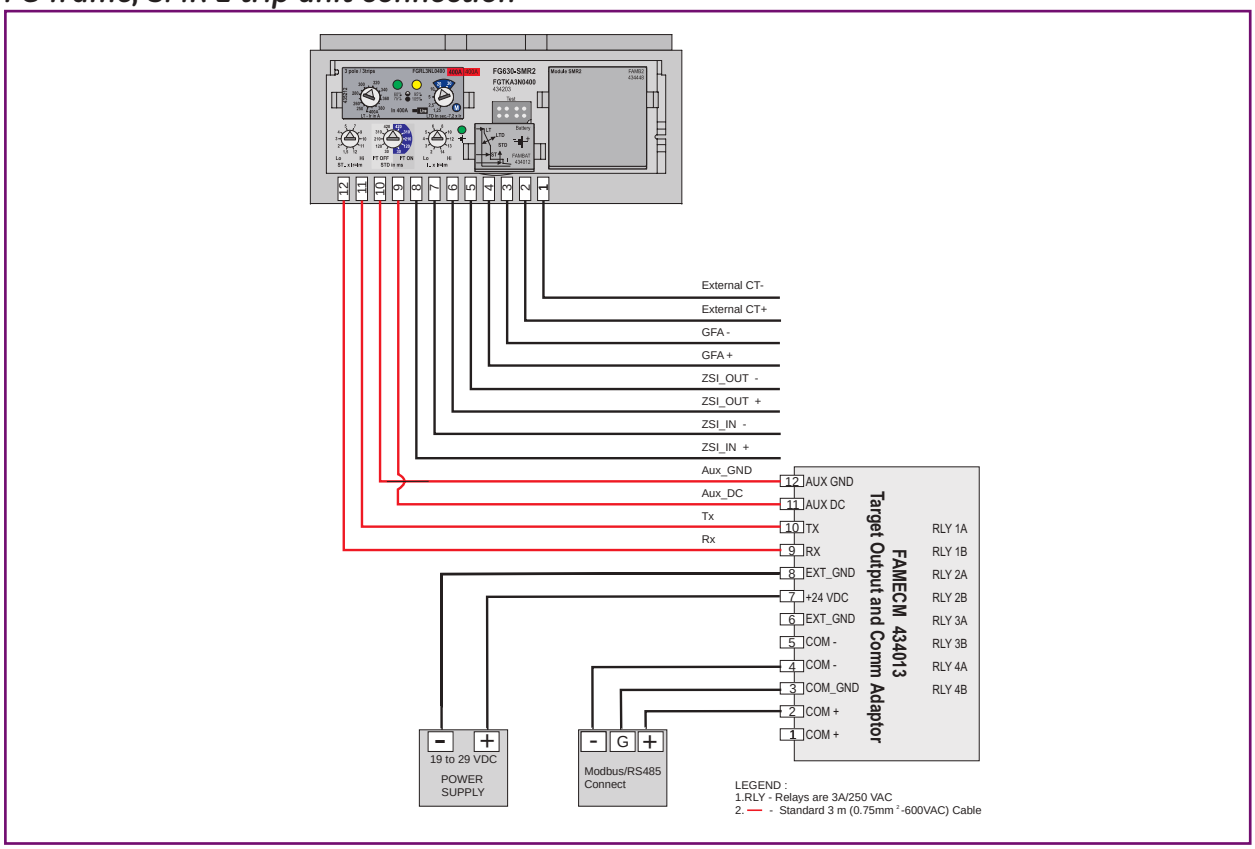

Just rel

FD & FE frame

G.2 Breakers
G.3 Phase separators
G.3 Residual current devices RCD's
G.5 Electrical operators
G.6 Rotary handles
G.8 Plug-in version
G.9 Draw-out version FE frame
G.10 Mechanical Interlock FE frame
G.10 Door flanges
G.11 Padlock fixed
G.12 Backplates
G.13 Terminal shields

FG frame

G.15 Breakers
G.15 Residual current devices RCD's
G.16 Electrical operators
G.16 Rotary handles
G.17 Plug-in version
G.18 Draw-out version
G.19 Mechanical interlock
G.20 Door flanges
G.21 Padlocking fixed
G.21 Backplate
G.22 Terminal shields

FK frame

G.24 Breakers
G.24 Electrical operators
G.25 Rotary handles
G.26 Draw-out version
G.26 Phase separators
G.27 Door flanges
G.28 Mechanical interlock
G.29 Terminal shields

Other accessories

G.30 Connectivity-60 mm system FD and FE frames
G.32 FG & FK frame, external groundfault sensors
G.33 FG frame SMR2, Trip unit accessory; FACM module
G.33 Relay RD5 and RD6
G.33 Rectangular sensor
G.33 Circular sensor

g on us

Dimensional Drawings

Breakers - FD160 fixed, front connected

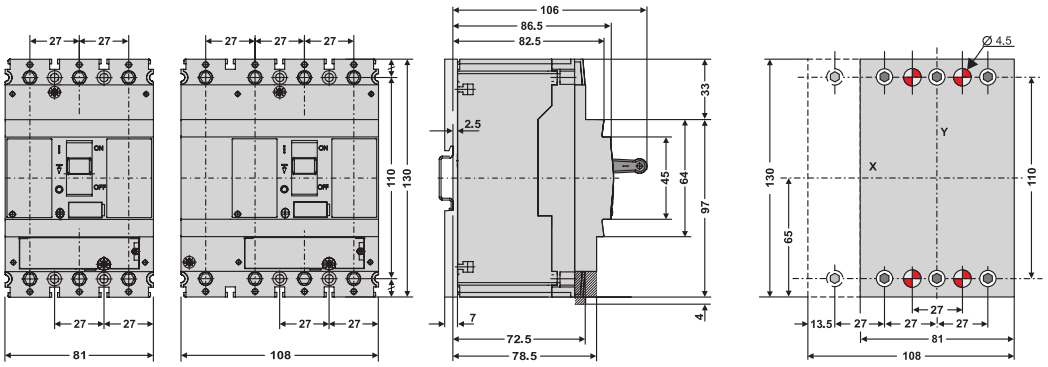

Breakers - FE160 and FE250 fixed, front connected

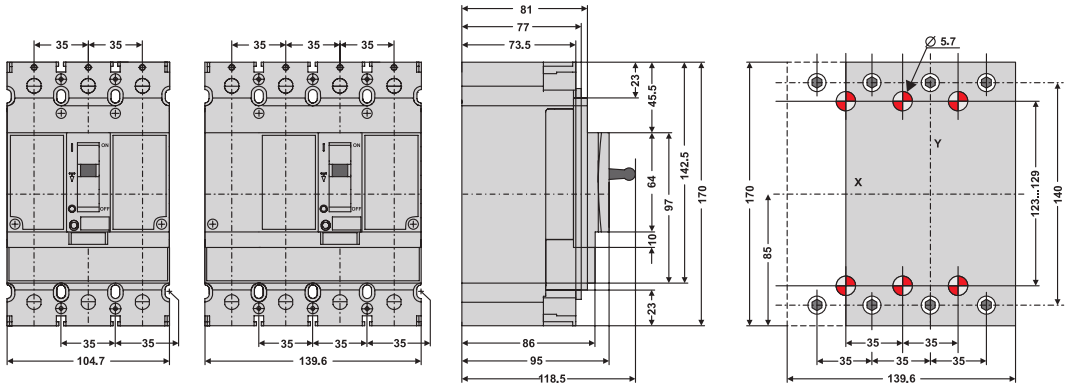

Dimensional Drawings

RCD side mounted - FD160

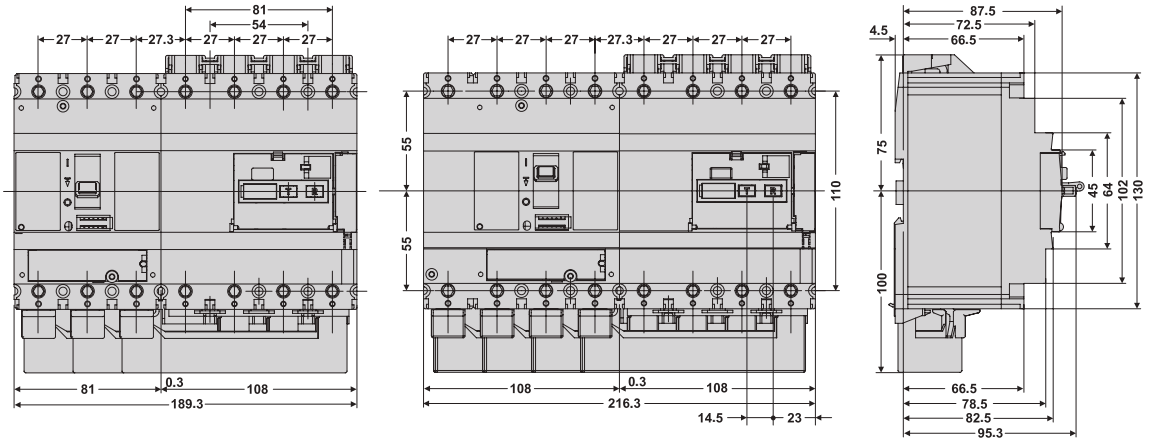

Breakers with phase separator - FD and FE frames

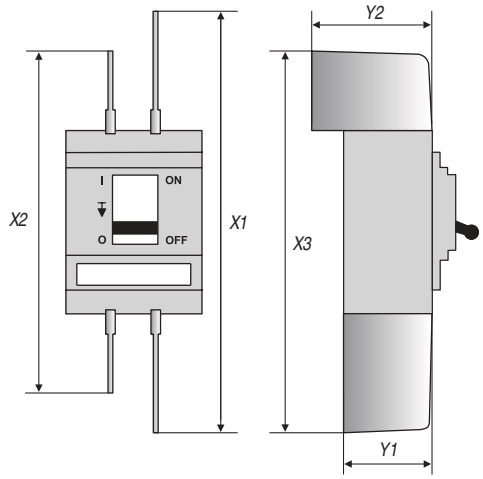

Dimensions	FD63 FD160	FE160 FE250
X1	330	410
X2	245	304
X3	287.5	357
Y1	63	72,5
Y2	105.5	126

Dimensional Drawings

RCD bottom mounted - FD160

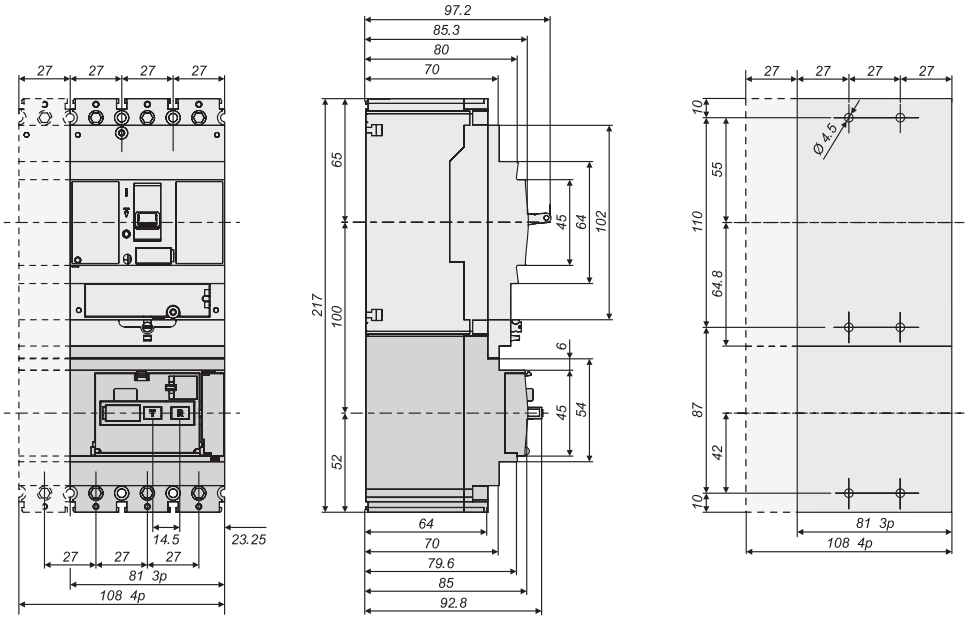

RCD bottom mounted - FE160 and FE250

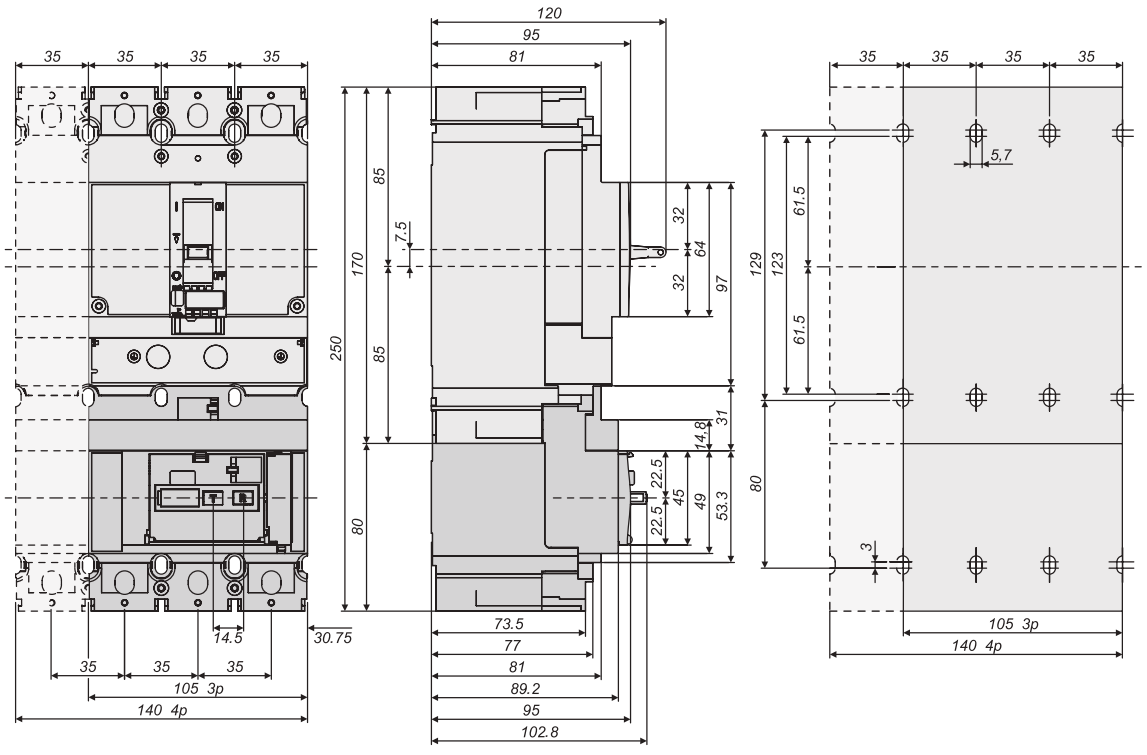

Dimensional Drawings

Breaker with electrical operator - FD160

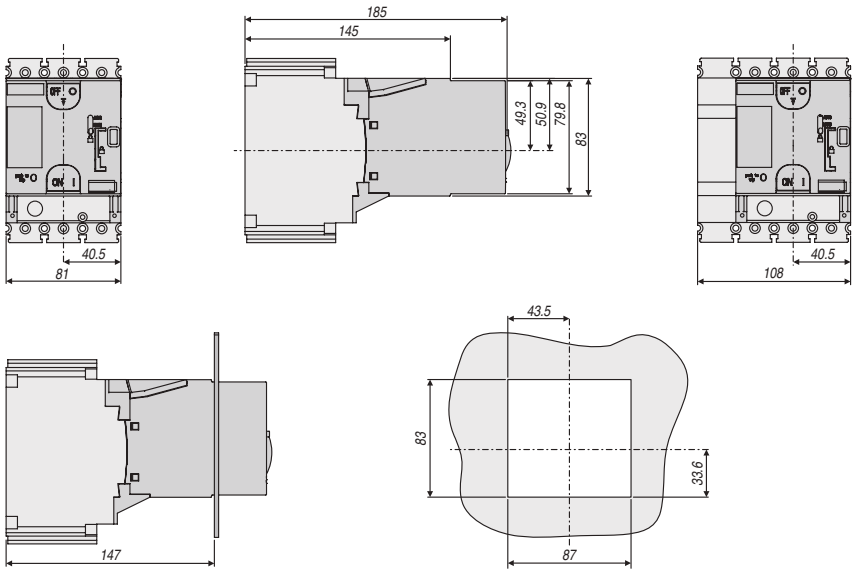

Breaker with electrical operator - FE160 and FE250

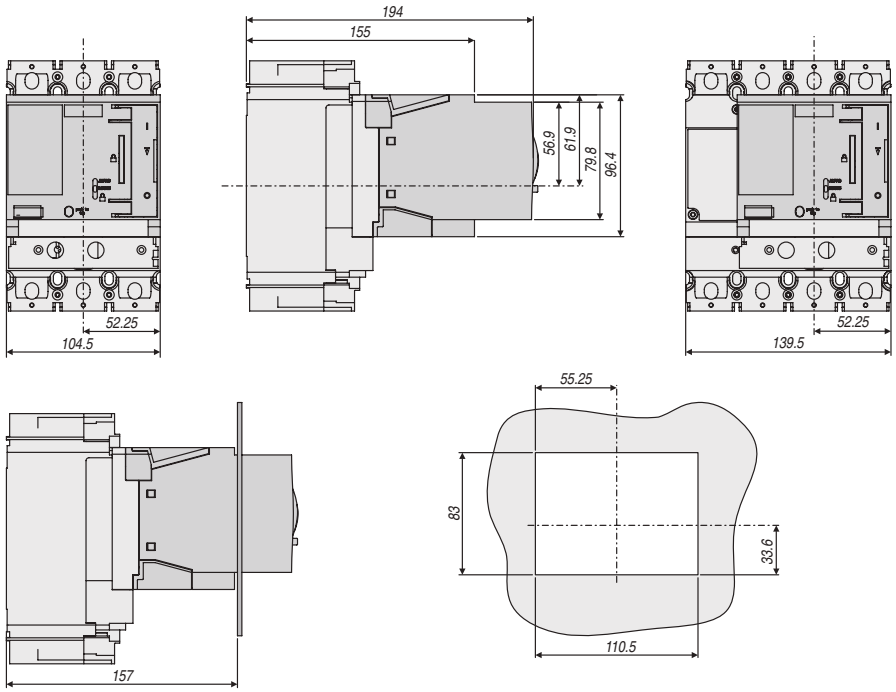

Dimensional Drawings

Rotary handle - Breaker and through panel mounted - FD160

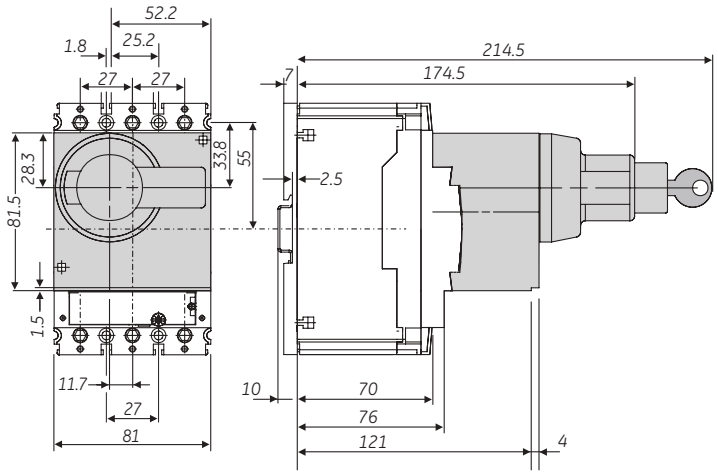

Rotary handle - Breaker and through panel mounted - FE160 and FE250

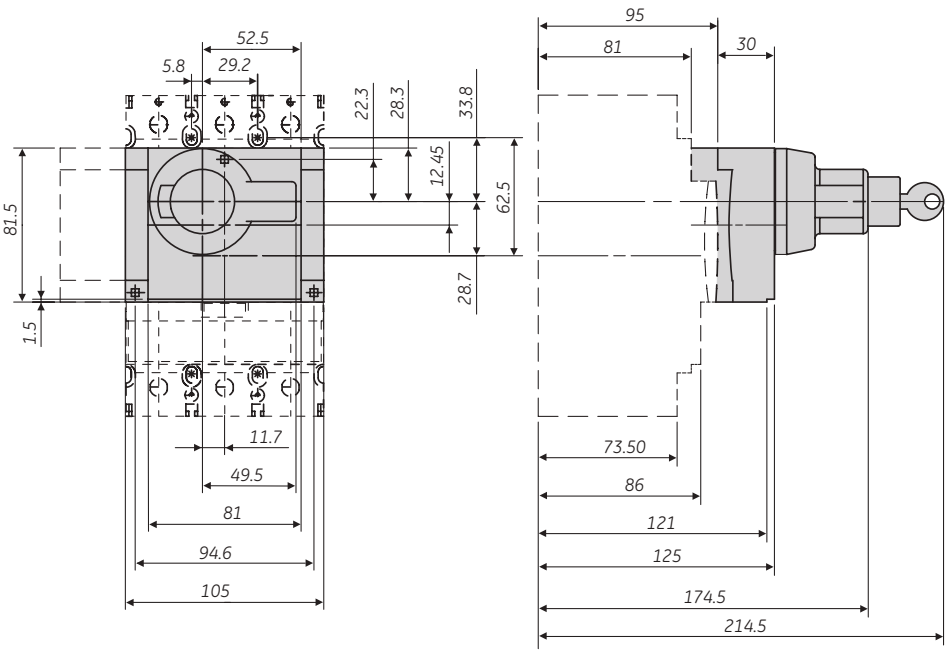

Dimensional Drawings

Rotary handle - Door mounted FD160

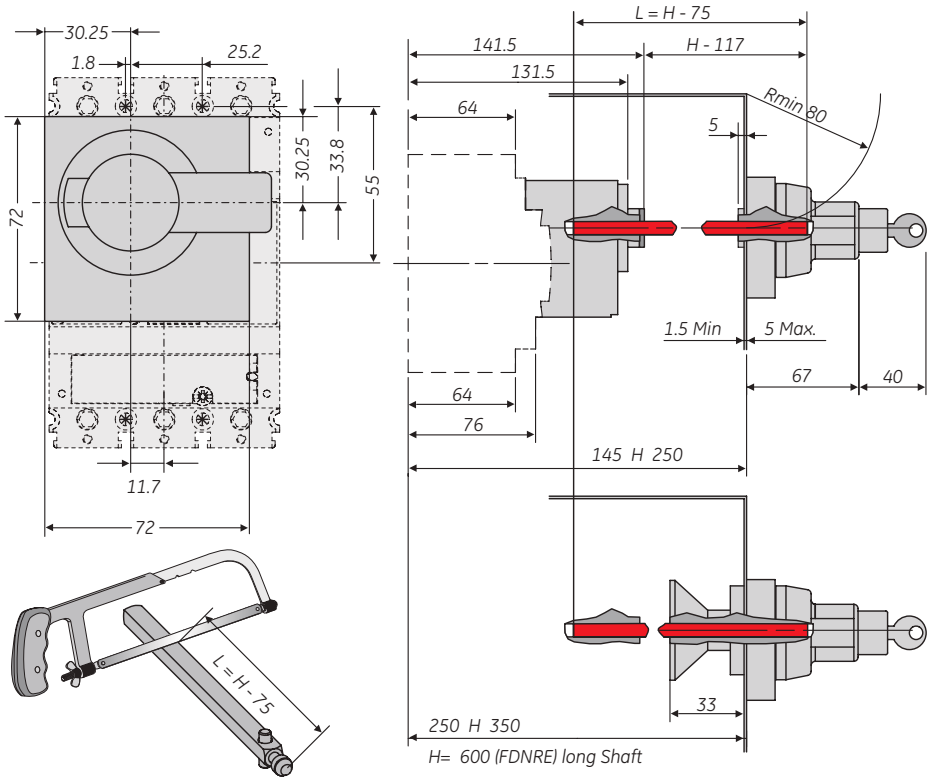

Rotary handle - Door mounted - FE 160 and FE250

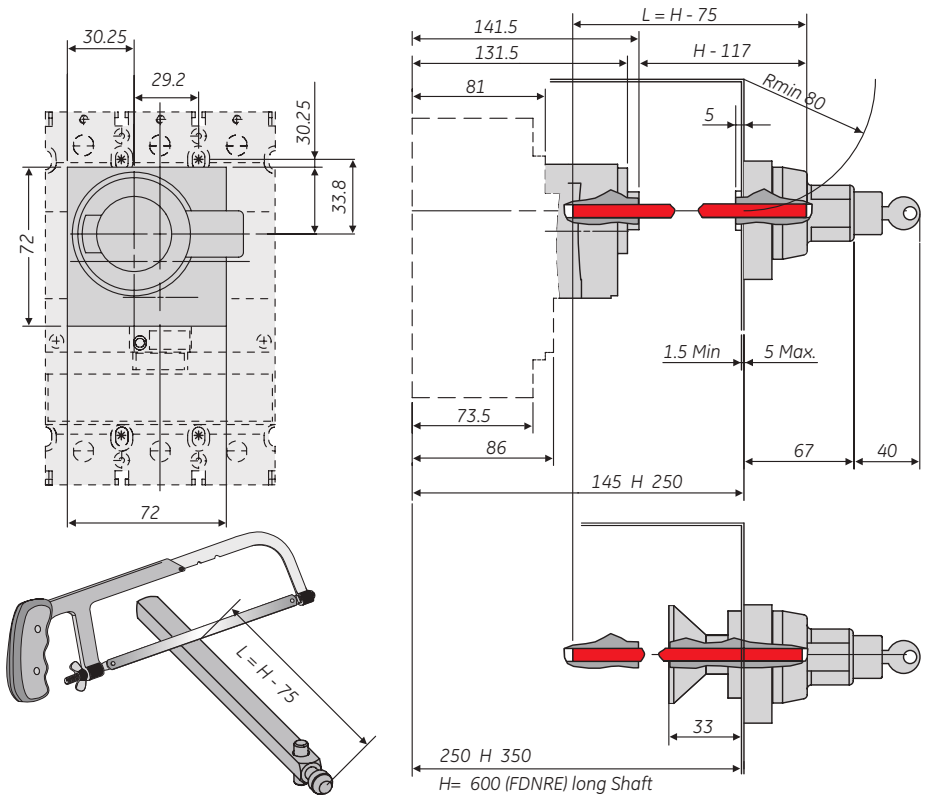

Dimensional Drawings

Plug-in version - FD160

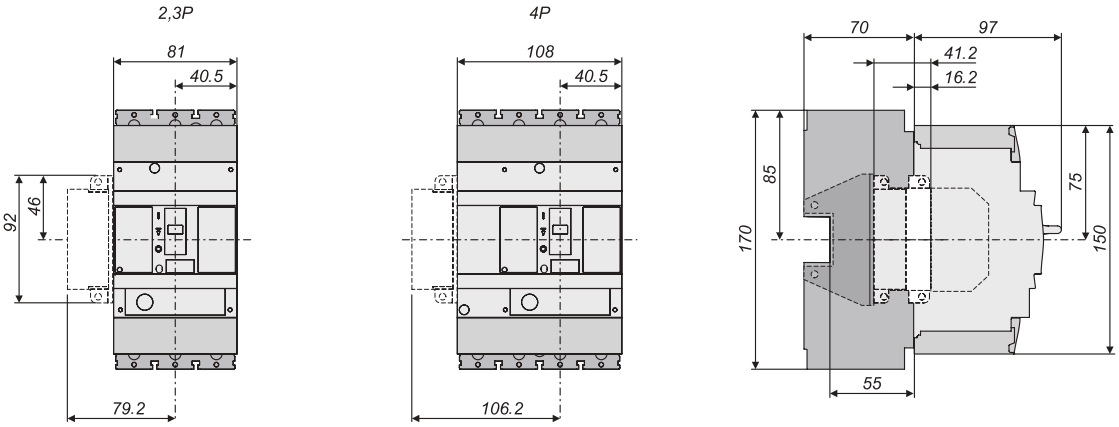

Plug-in version - FE160 and FE250

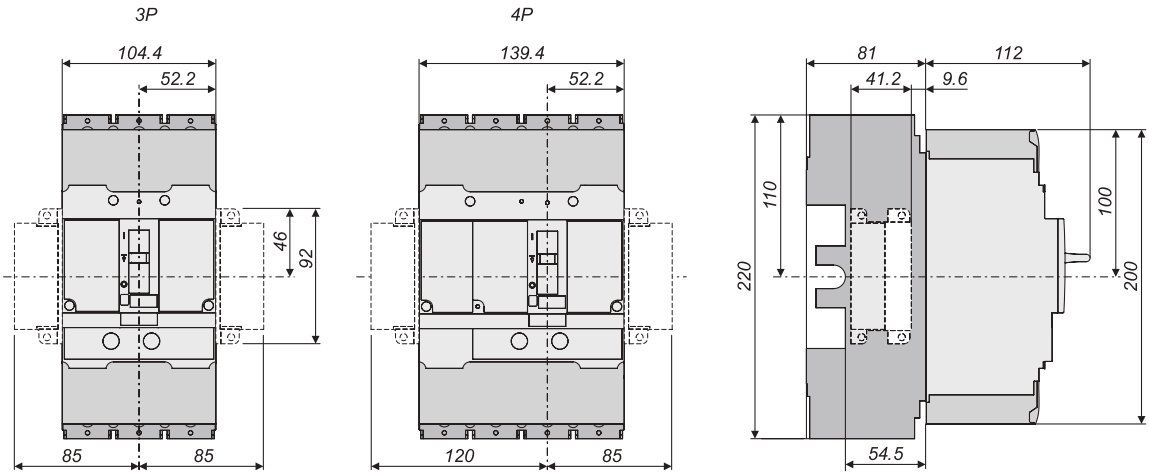

Dimensional Drawings

Draw-out version - FE160 & FE250

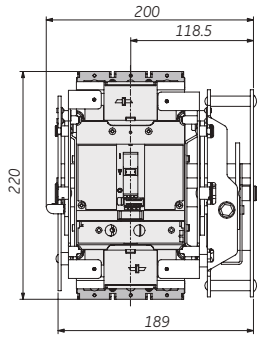

3 pole front view

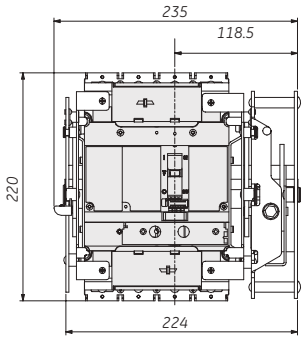

4 pole front view

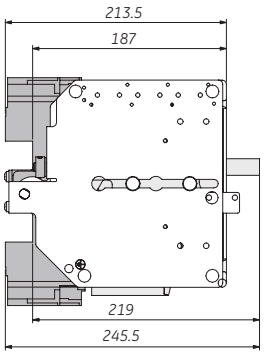

Side view

Draw-out version - FE160 & FE250 - Through door execution side views

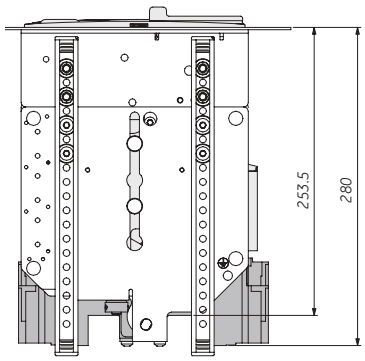

Toggle operator

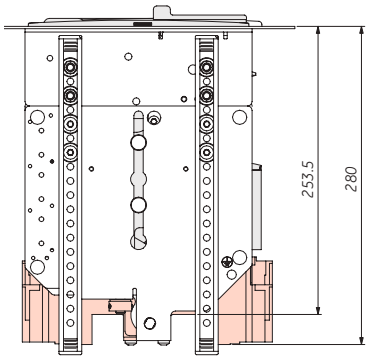

Through door rotary handle

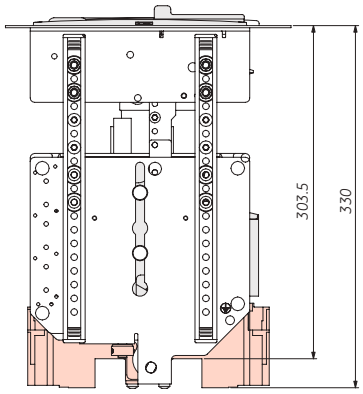

Motor operator

Draw-out version - FE160 & FE250 - Through door execution, door cut-outs

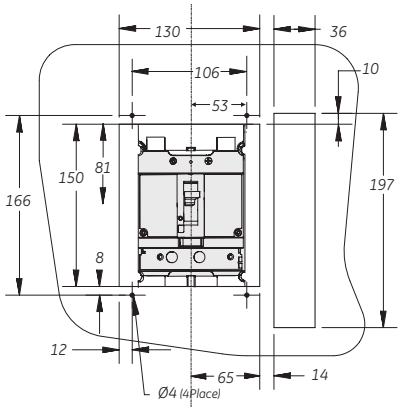

All through door variants

Dimensional Drawings

FE Frame, 2 pieces mechanically interlocked

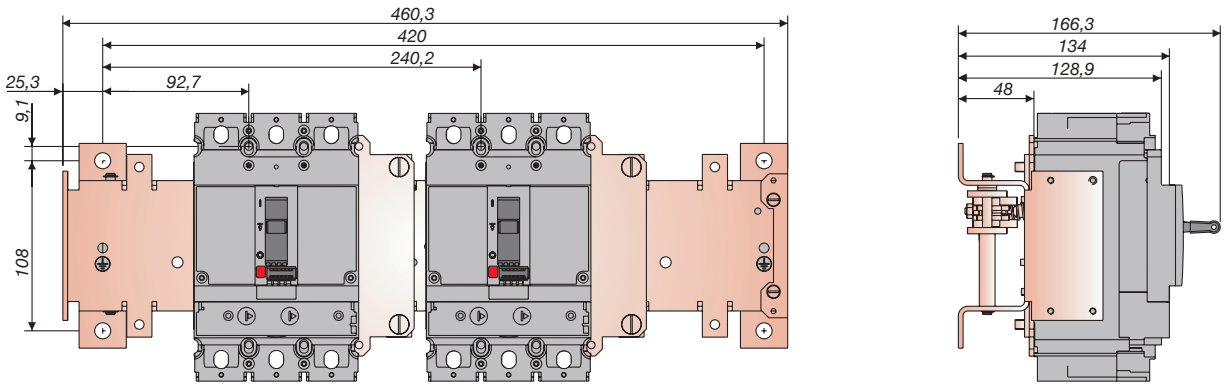

Door flanges - FD160, FE160 and FE250

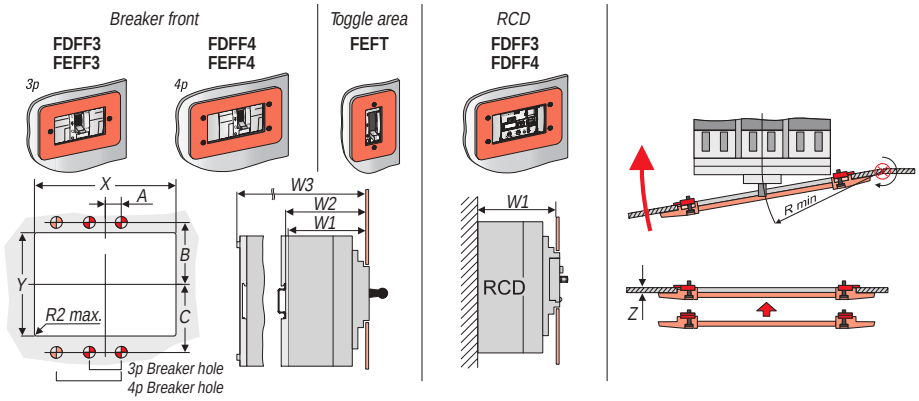

Dimensions												
			A	B	C	Rmin	W1(max)	W2(max)	W3(max)	X	Y	Z
FDFF3	FD 63/160	3p	13.5	55	55	80	83.2	85.8	93.2	114	78	1...4
FDFF4	FD 63/160	4p	13.5	55	55	93.5	83.2	85.8	93.2	146	78	1...4
FEFF3	FE160/250	3p	17.5	55.5	70.5	91.75	89.2	-	-	138	97	1...4
FEFF4	FE160/250	4p	17.5	55.5	70.5	102.5	89.2	-	-	173	97	1...4
FEFT	FE 160/250	3p/4p	17.5	55.5	70.5	93,5	93.2	-	-	60	97	1...4
FDFF3 (RCD*)	FD63/160	3p	13.5	155	42	80	83.2	85.8	93.2	114	78	1...4
FDFF4 (RCD*)	FD63/160	4p	13.5	155	42	93.5	83.2	85.8	93.2	146	78	1...4
FDFF3 (RCD*)	FE160/250	3p/4p	18	182.1	42	80	89.2	-	-	114	78	1...4

Dimensional Drawings

Door flanges - FD160, FE160 and FE250

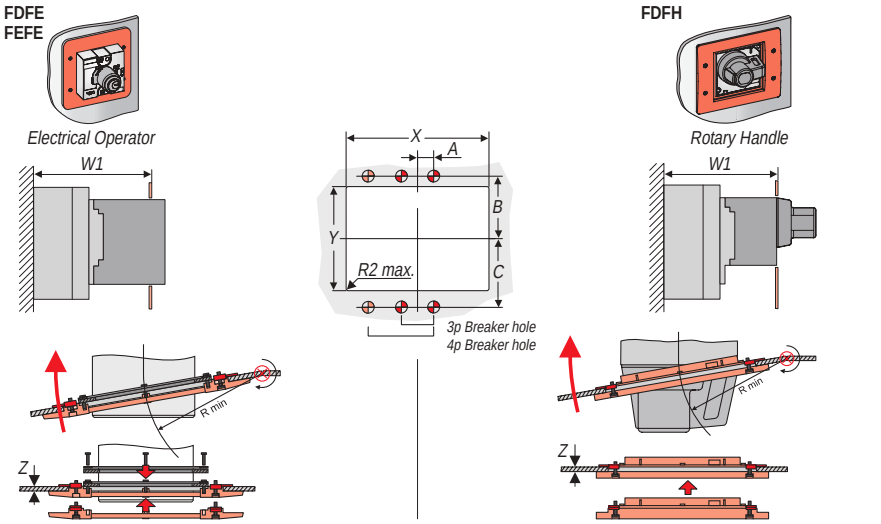

Dimensions									
3+4 pole versions		A	B	C	Rmin	W1(max)	X	Y	Z
FDFE	FD 63/160 Electr. Operator	13.5	49.5	64.5	80	141	148.5	124.5	1...4
FEFE	FE 160/250 Electr. Operator	17.5	46	80	100	170	172	124.5	1...4
FDFH	FD63/160 Rotary Handle	13.5	46,25	63.75	100	125	120	120	1...4
FEFH	FE 160/250 Rotary Handle	17.5	46.25	81.75	100	125	120	120	1...4

Padlocking device fixed on breaker

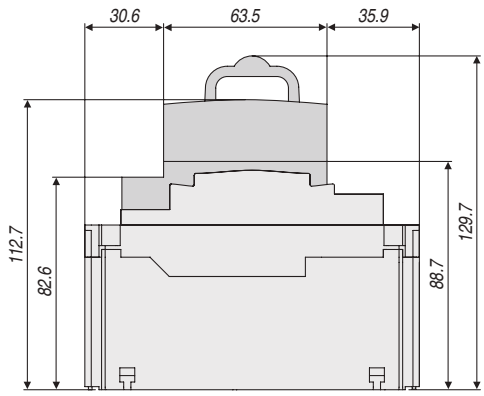

FD160

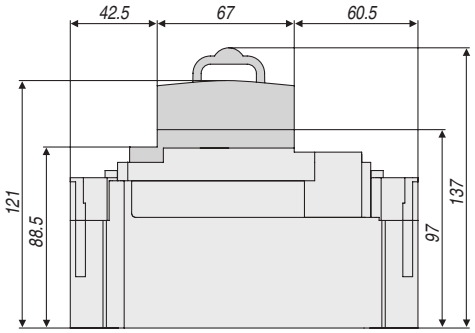

FE160 and FE250

Dimensional Drawings

Backplate - FD160

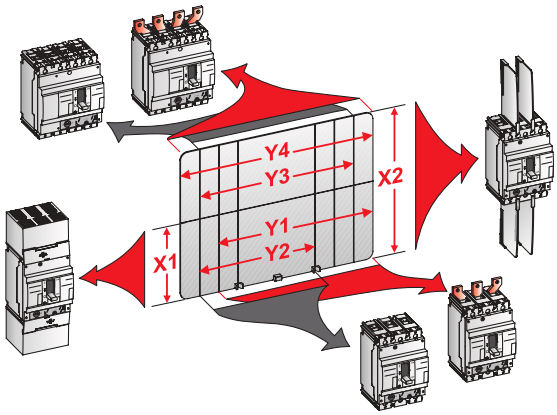

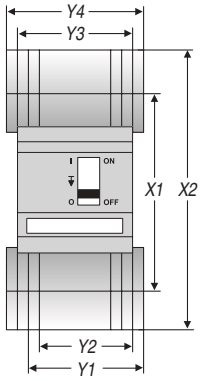

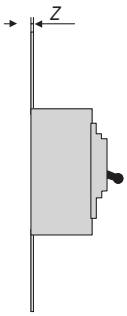

Dimensions	FD 63 FD 160
X1	230
X2	330
Y1	108
Y2	81
Y3	108
Y4	135
Z	1

Backplate - FE160 and FE250

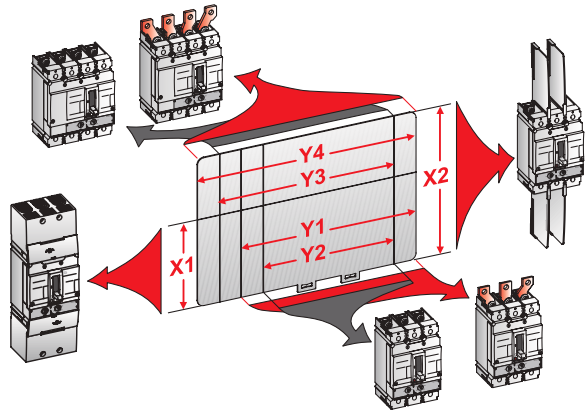

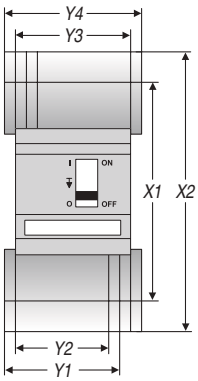

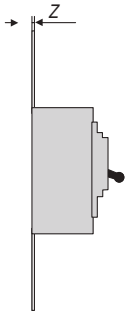

Dimensions	FE160 FE250
X1	310
X2	410
Y1	139.5
Y2	104.5
Y3	139.5
Y4	175
Z	1

Dimensional Drawings

Breaker with short terminal shields - FD160

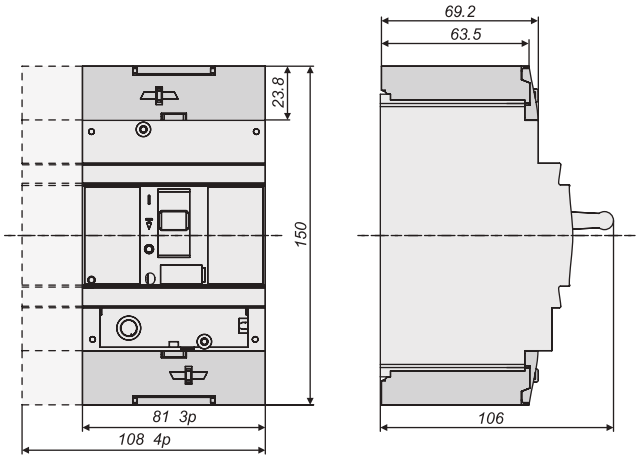

Breaker with long terminal shields - FD160

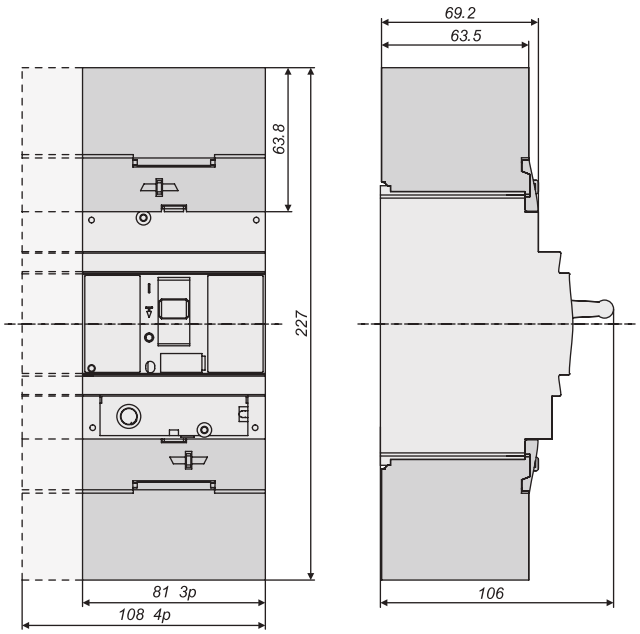

Dimensional Drawings

Breaker with short terminal shields - FE160 and FE250

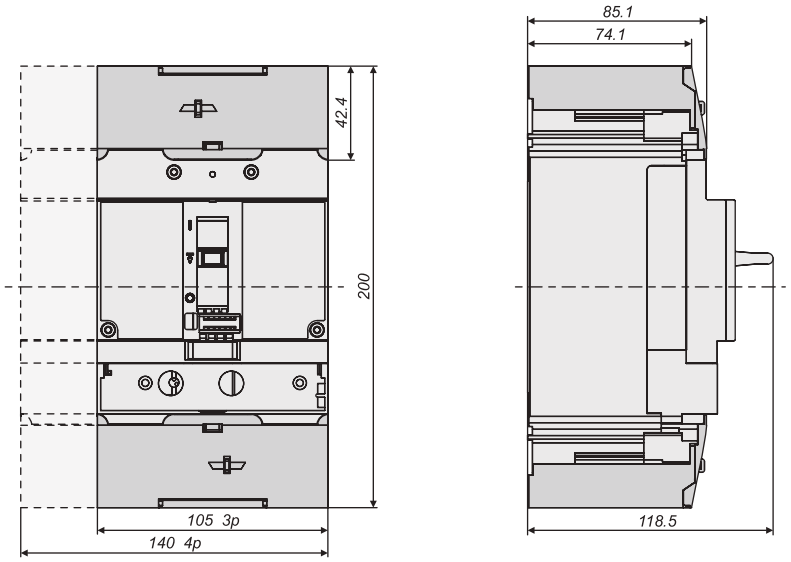

Breaker with long terminal shields - FE160 and FE250

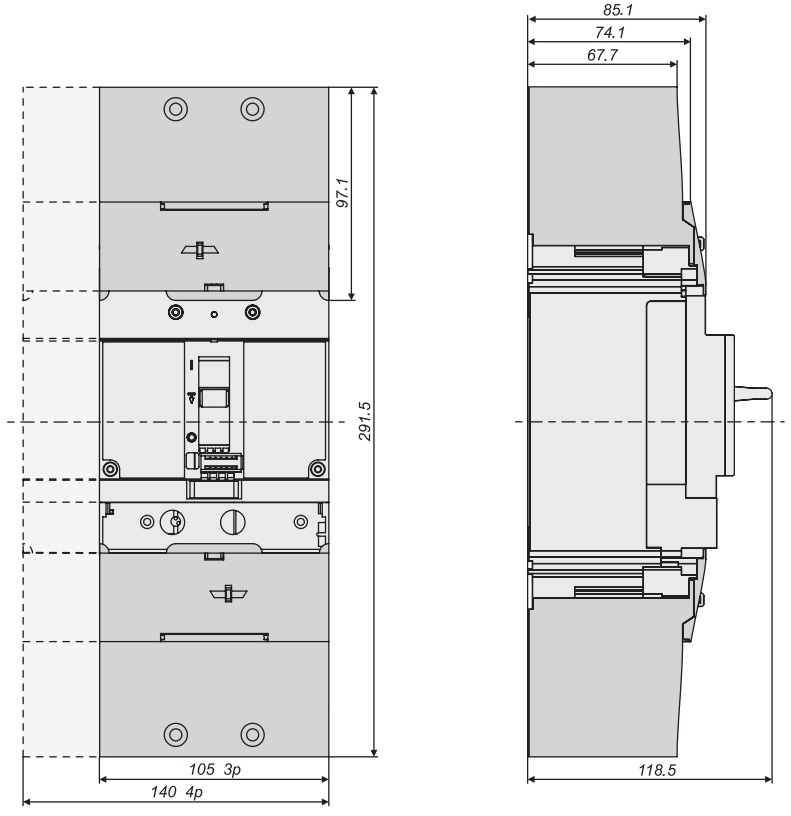

Dimensional Drawings

Breakers - FG400/630 fixed, front connected

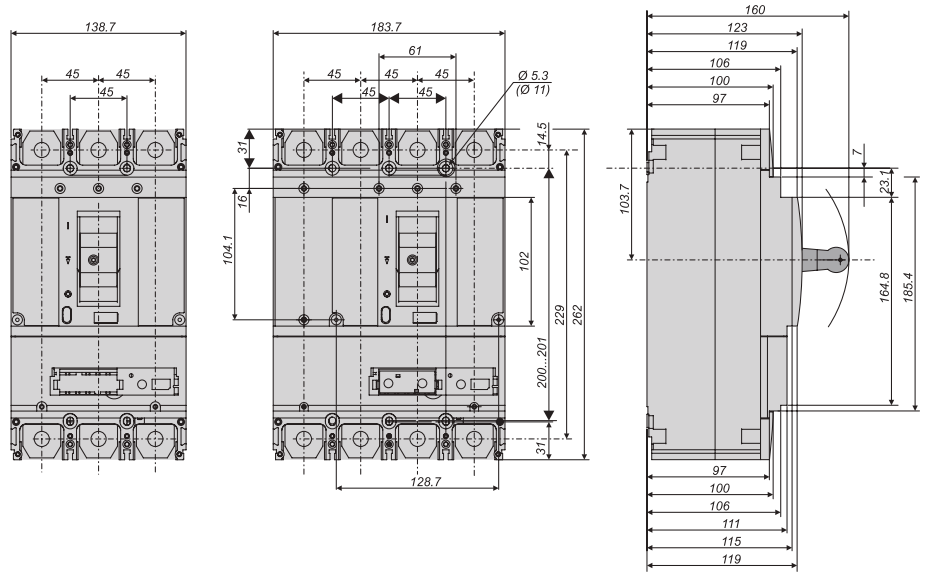

RCD bottom mounted - FG 400/630

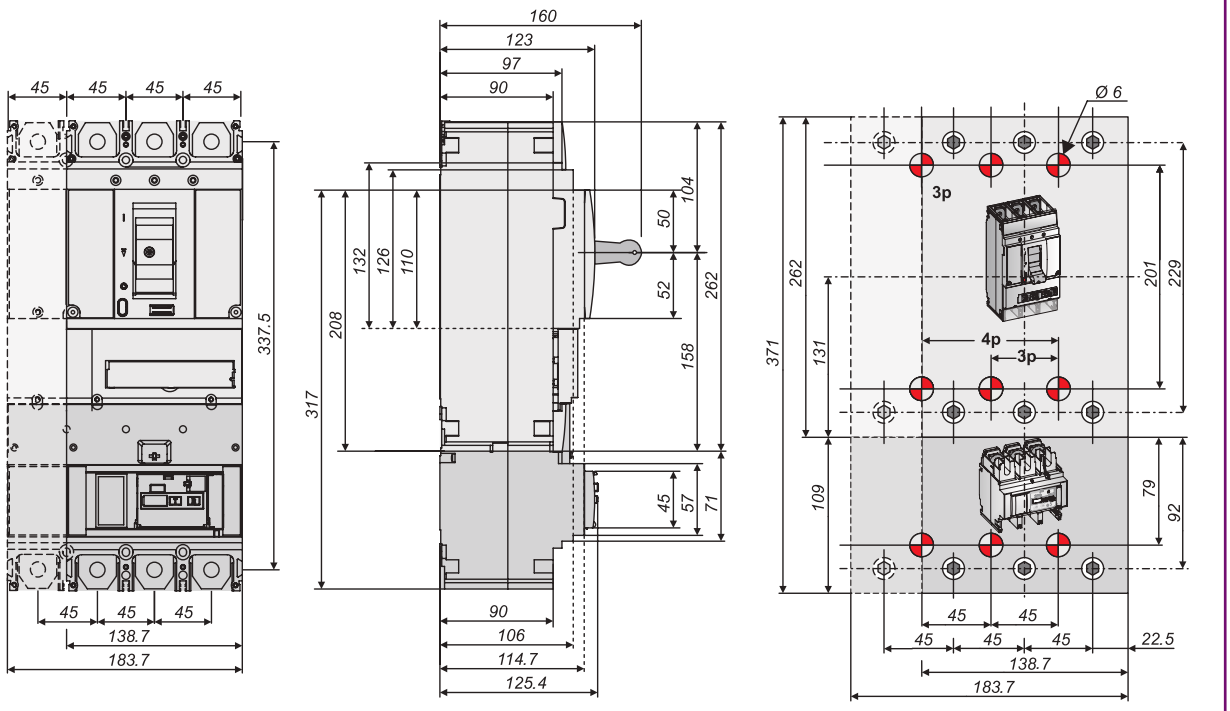

Dimensional Drawings

Breaker with electrical operator - FG400/630

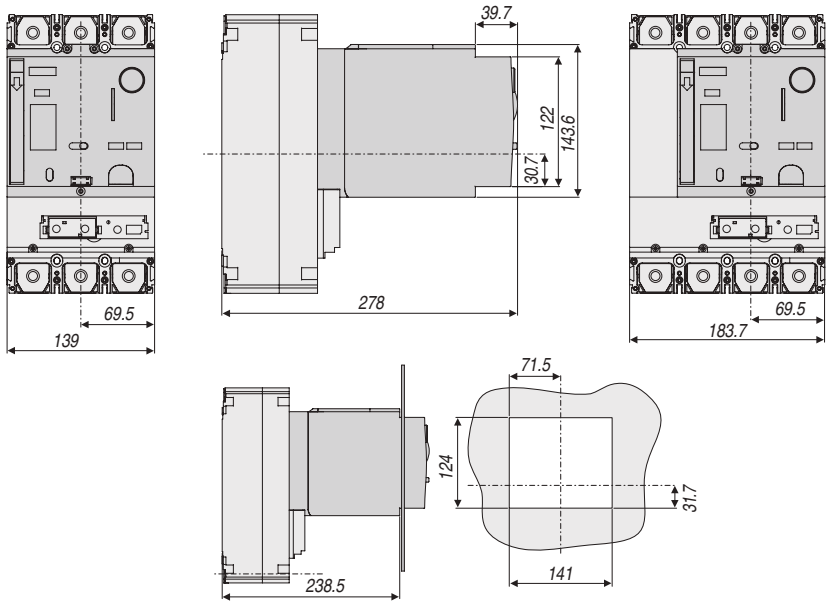

Rotary handle, breaker and through panel mounted - FG400/630

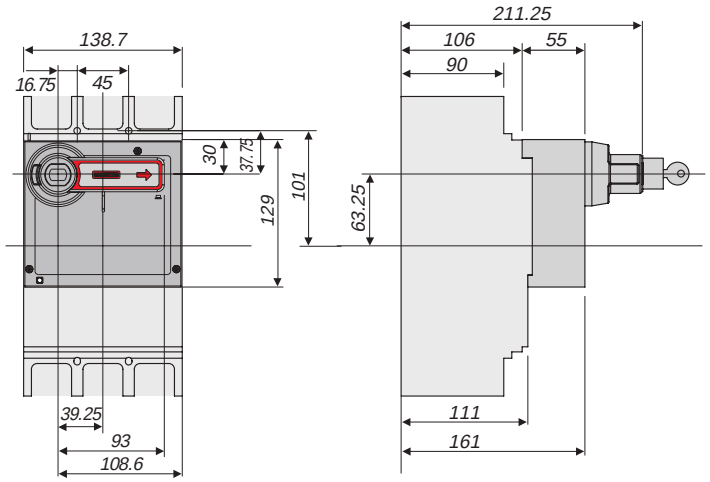

Dimensional Drawings

Rotary handle, door mounted - FG400/630

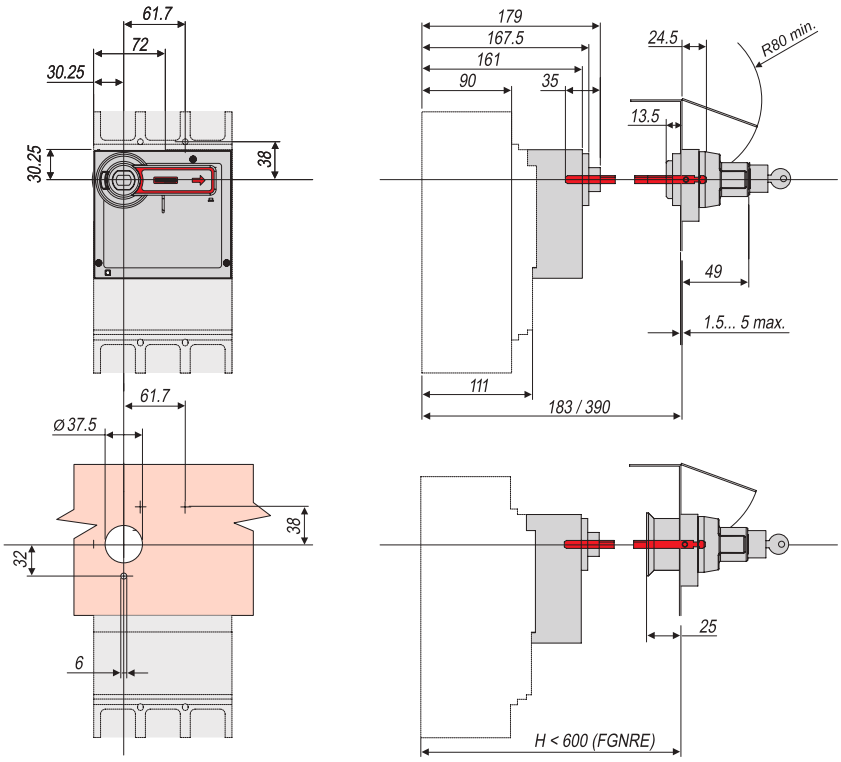

Plug-in version - FG400/630

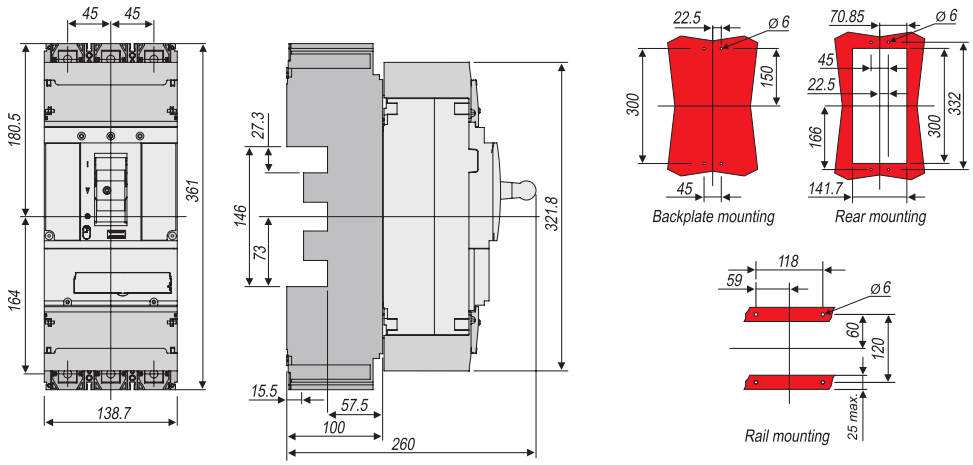

Dimensional Drawings

Draw-out version - FG400 & FG630

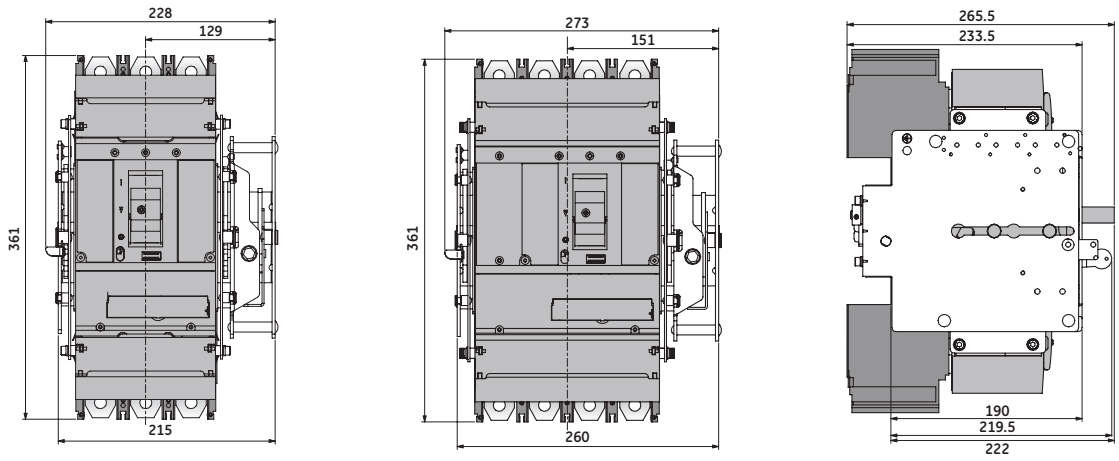

4 pole front view

Draw-out version - FG400 & FG630 - Through door execution side views

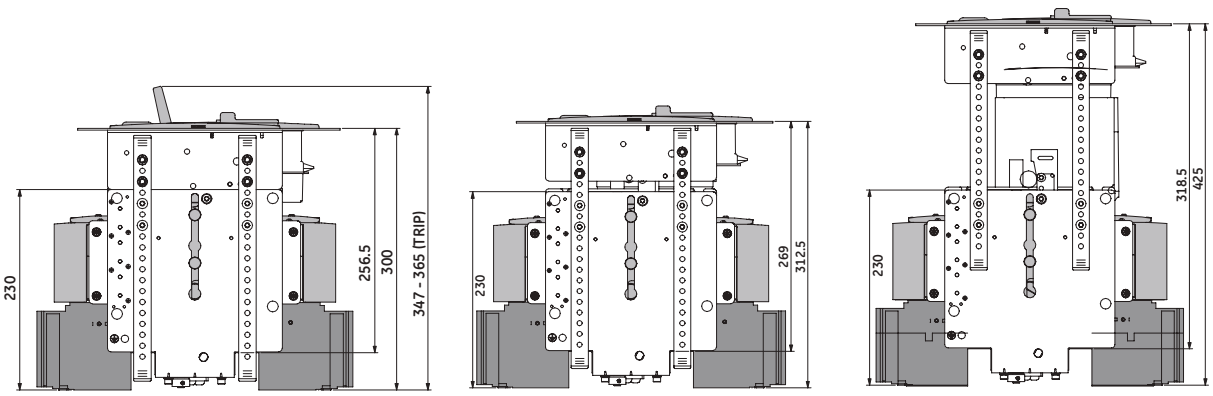

Toggle operator | Through door rotary handle | Motor operator

Draw-out version - FG400 & FG630 - Through door execution, door cut-outs

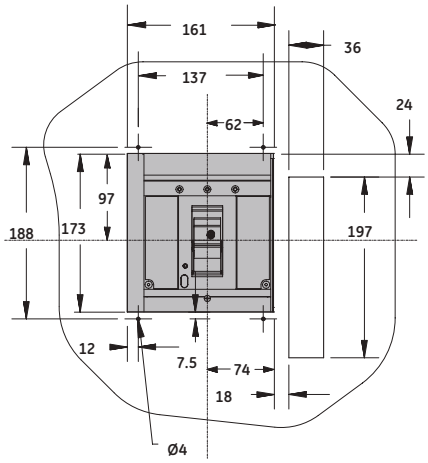

All through door variants

Dimensional Drawings

FG frame, 2 pieces mechanically interlocked

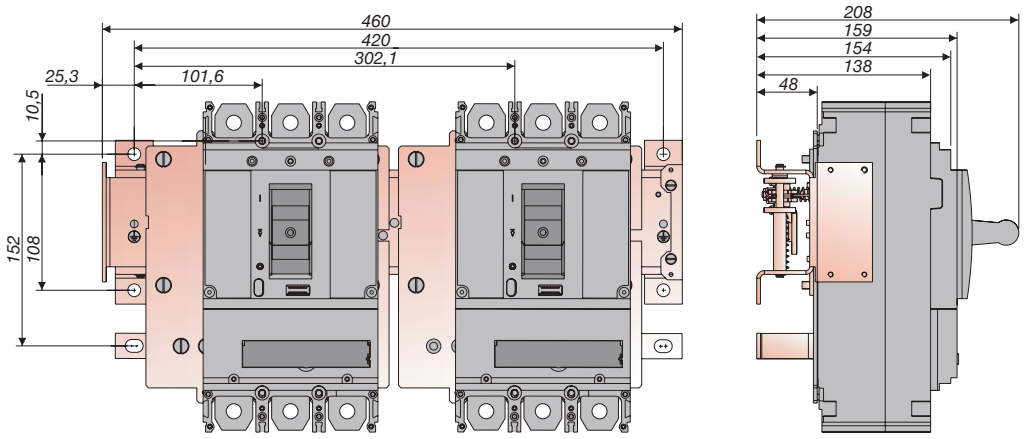

FG frame and FE frame mechanically interlocked

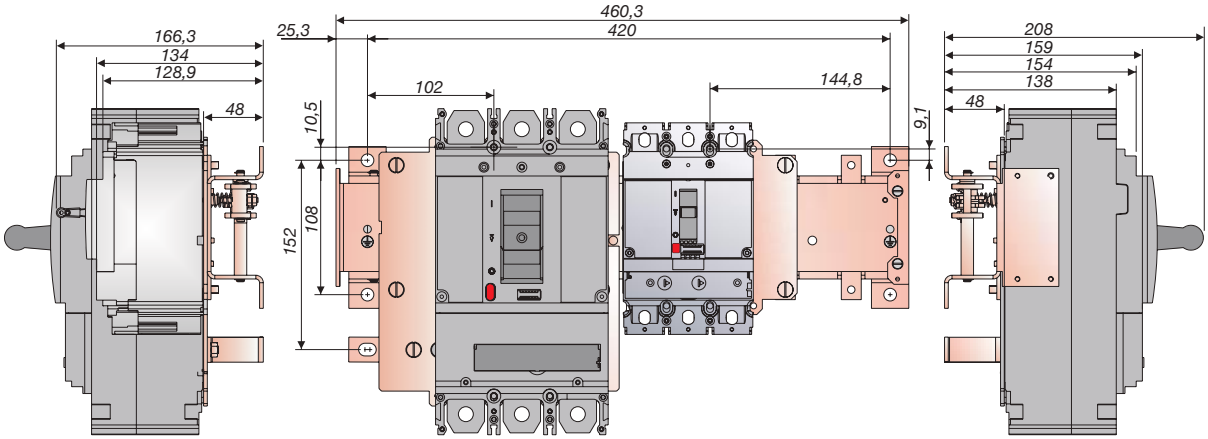

Dimensional Drawings

Door flanges - FG400/630

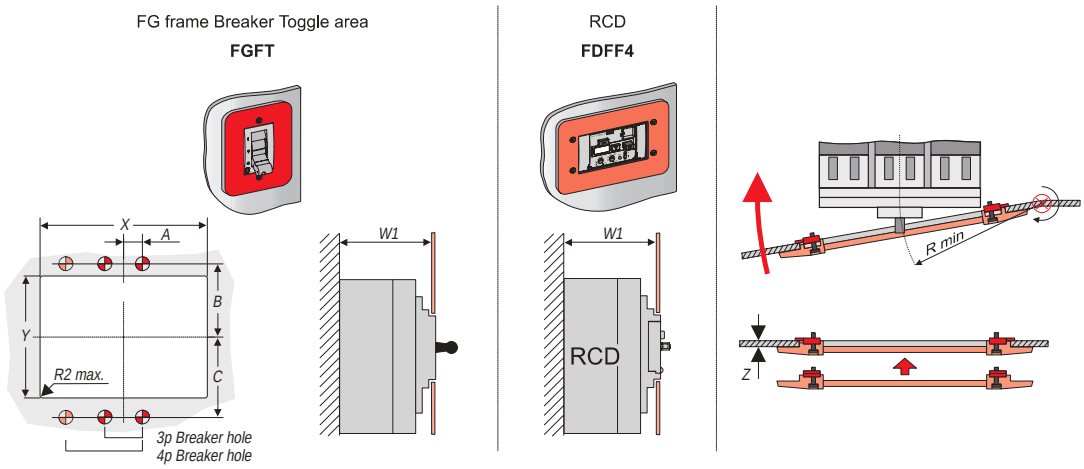

Dimensions										
			A	B	C	Rmin	W1(max)	X	Y	Z
FGFT	FG 400/630 Toggle	3p/4p	22.5	73	127	100	115	95	135	1...4
FDFF4	FG 400/630 RCD	3p/4p	22.5	297.5	68.5	93.5	115	146	78	1...4

Door flanges - FG400/630

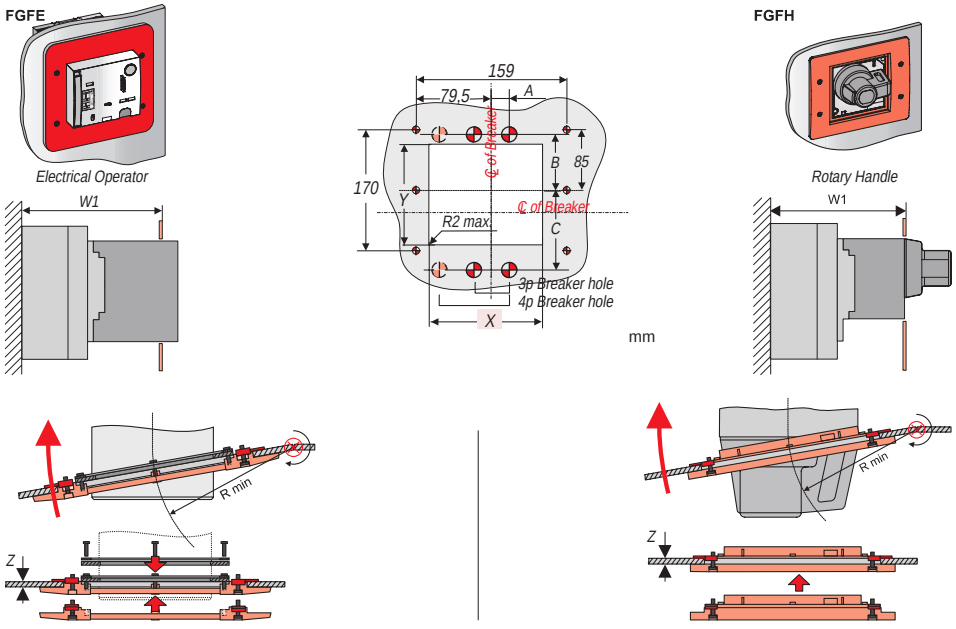

Dimensions									
3+4 pole versions		A	B	C	Rmin	W1(max)	X	Y	Z
FGFE	FG 400/630 Motor Operator	22.5	70	130.8	100	238.5	143	125	1...4
FGFH	FG 400/630 Rotary Handle	22.5	71.5	129	115	161	143	133	1...4

Dimensional Drawings

Padlock fixed - FG400/630

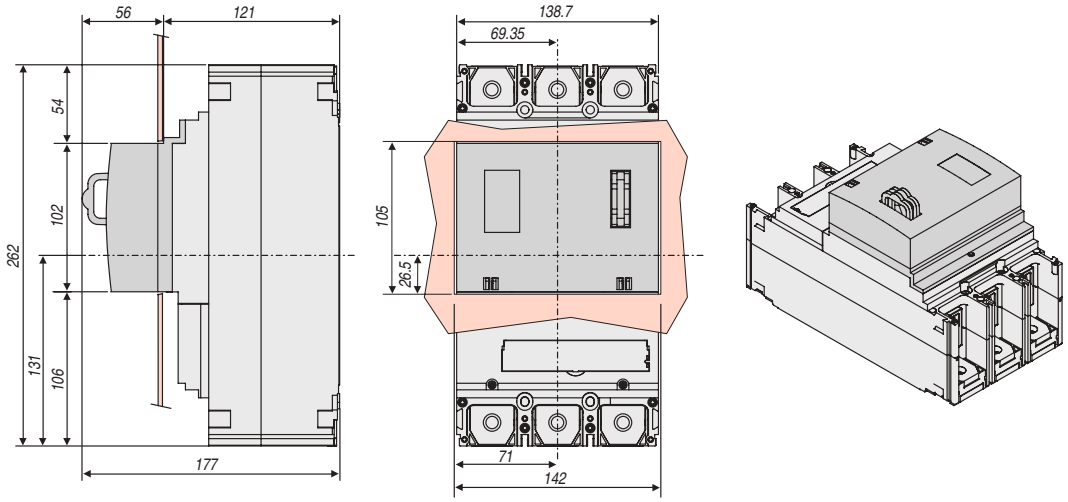

Backplate - FG400/630

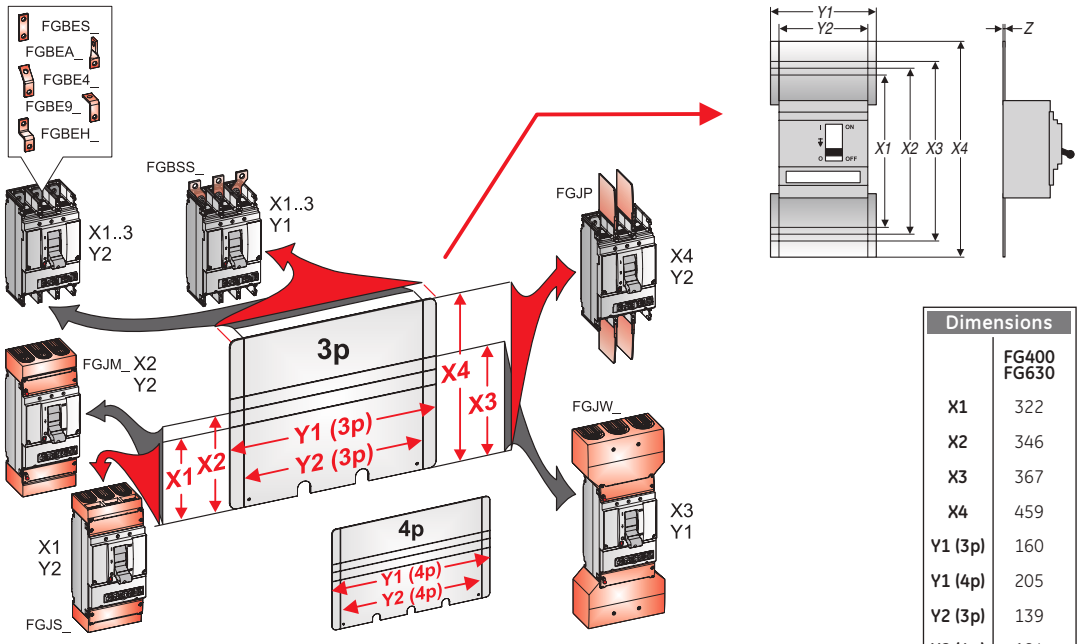

Dimensions	FG400 FG630
X1	322
X2	346
X3	367
X4	459
Y1 (3p)	160
Y1 (4p)	205
Y2 (3p)	139
Y2 (4p)	184
Z	1.5

Dimensional Drawings

Breaker with short terminal shields - FG400/630

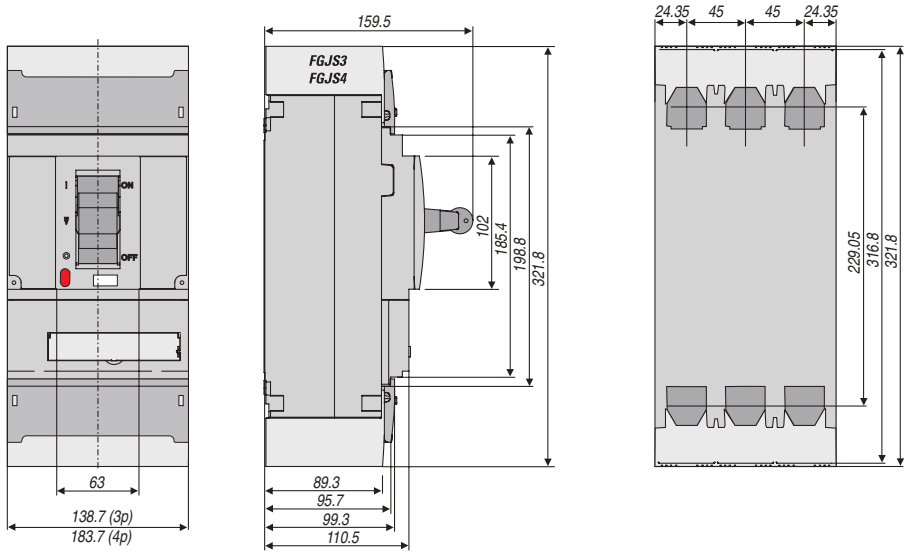

Breaker with medium terminal shields - FG400/630

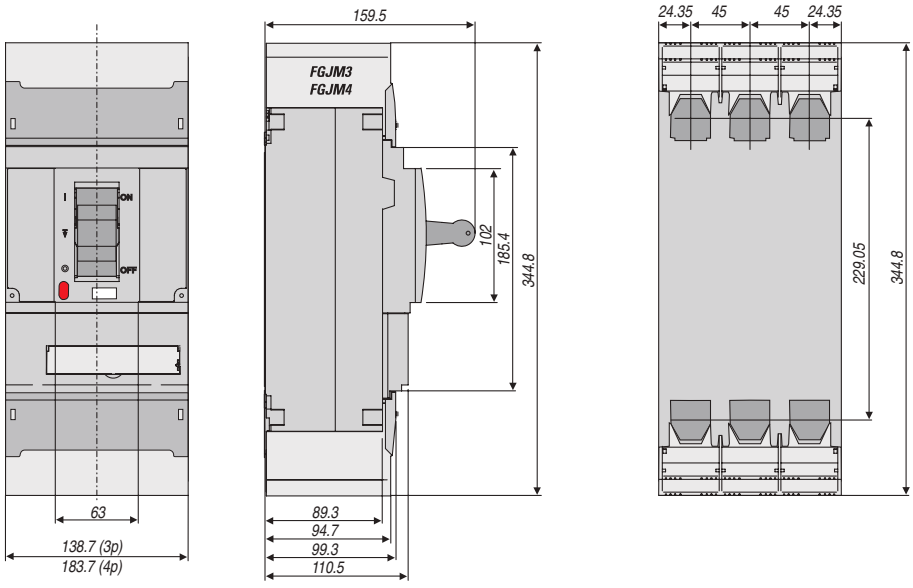

Dimensional Drawings

Breaker with long and wide terminal shields - FG400/630

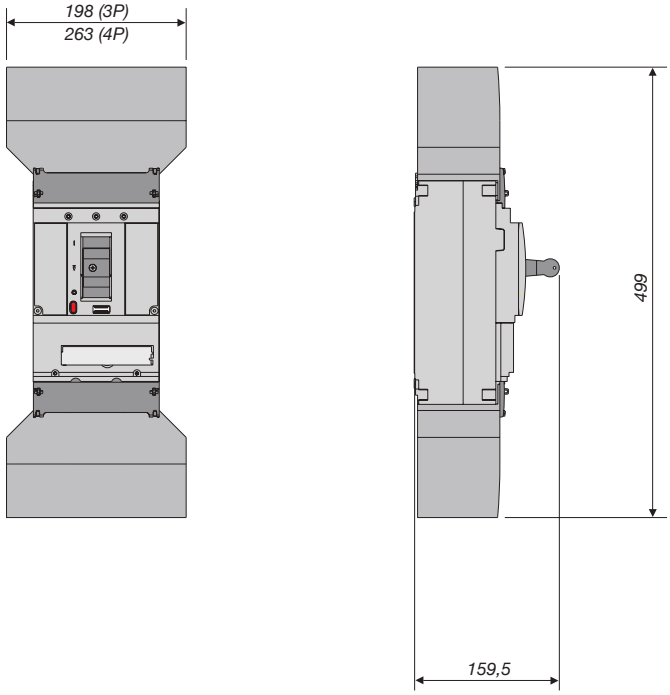

Dimensional Drawings

Breakers - FK800/1250/1600 fixed, front connected

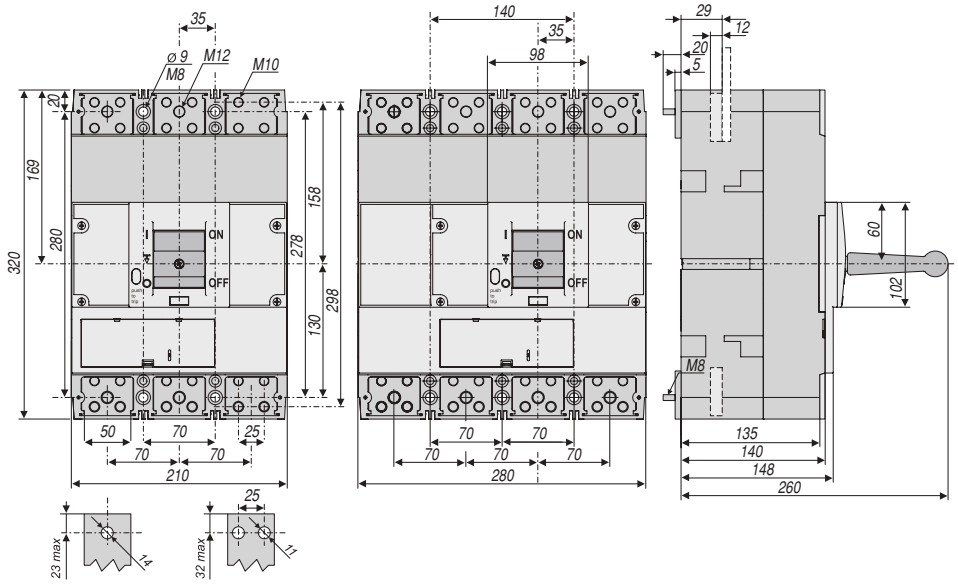

Breaker with electrical operator - FK800/1250/1600

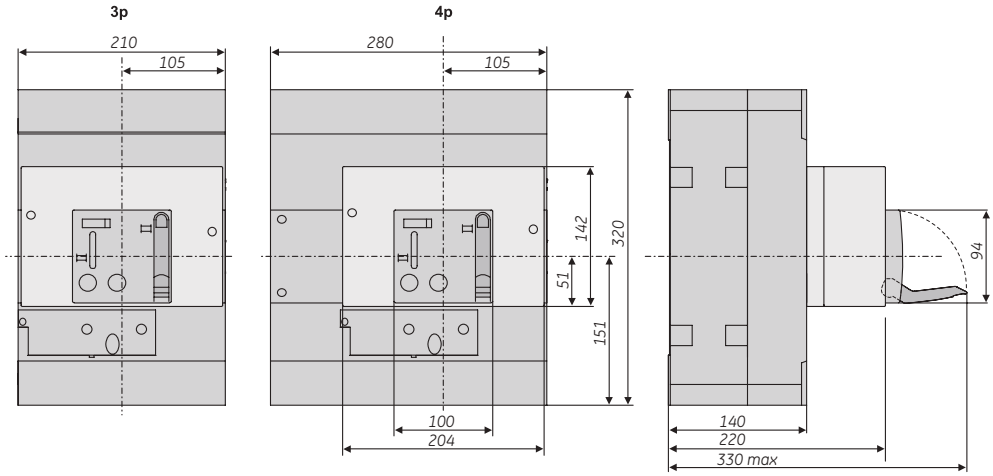

Dimensional Drawings

Rotary handle, door mounted - FK800/1250/1600

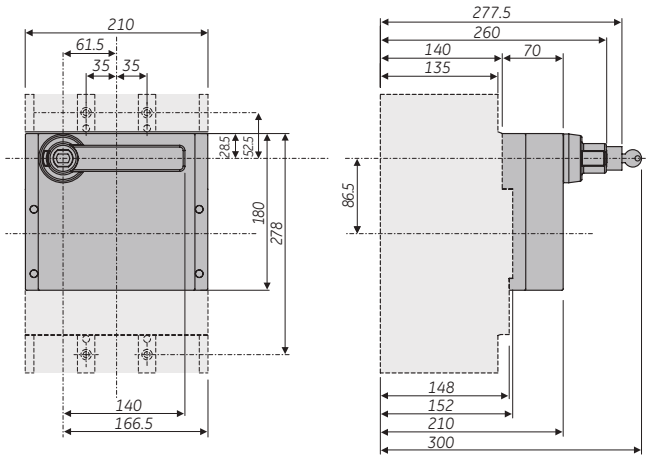

Rotary handle, breaker and through panel mounted - FK800/1250/1600

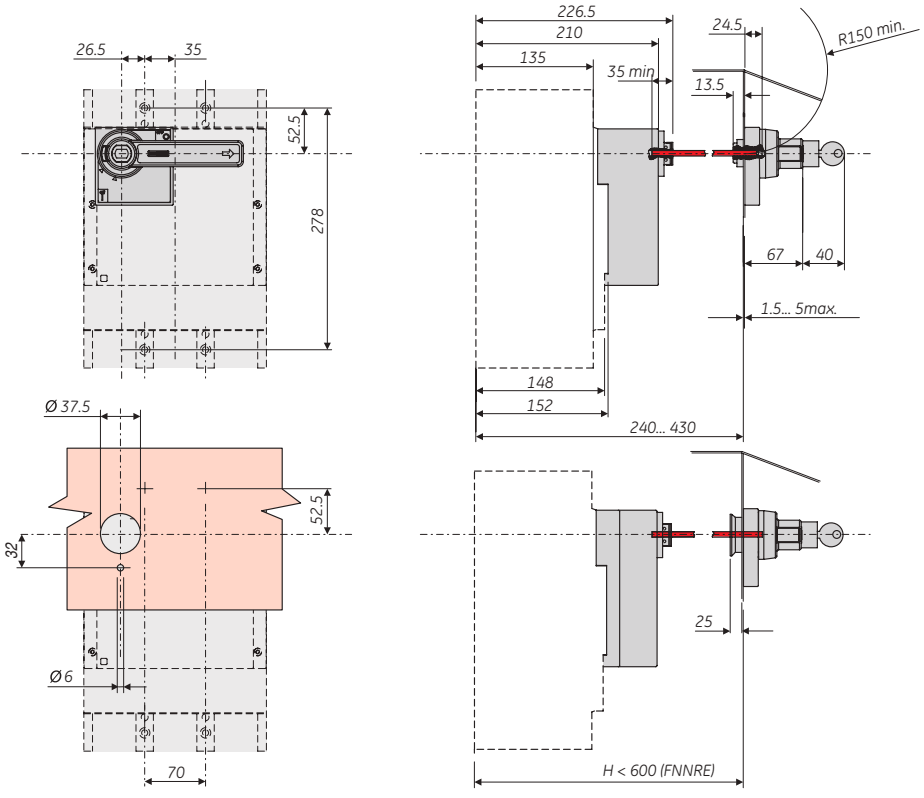

Dimensional Drawings

Draw-out version - FK800/1250/1600

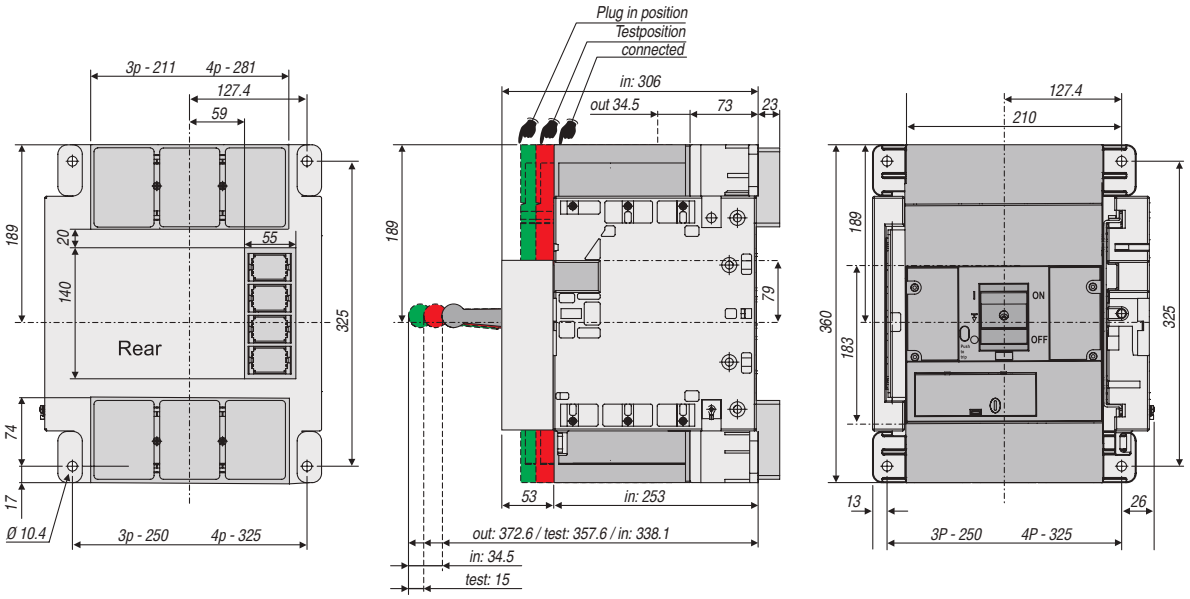

Draw-out version FK800/1250/1600 connection options

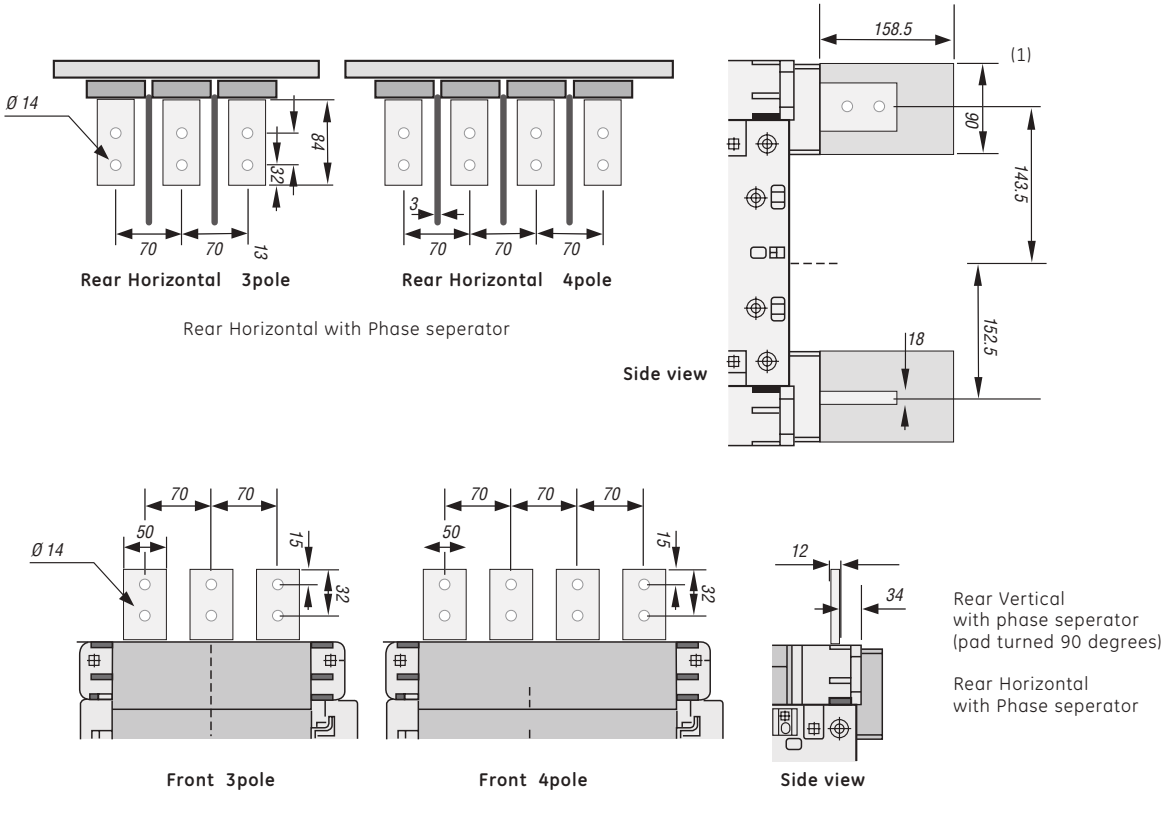

(1) Pad can be turned 90 degrees to indicated Rear Vertical connection mode.

Dimensional Drawings

Door flanges - FK800/1250/1600

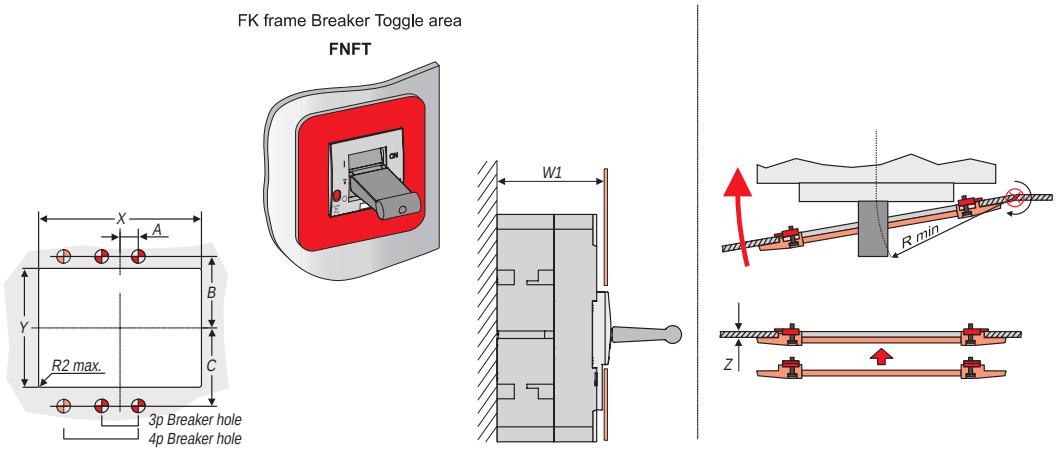

Dimensions										
			A	B	C	Rmin	W1(max)	X	Y	Z
FNFT	FK 800/1250/1600	3p/4p	35	130	150	120	153	101	104	1...4

Door flanges - FK800/1250/1600

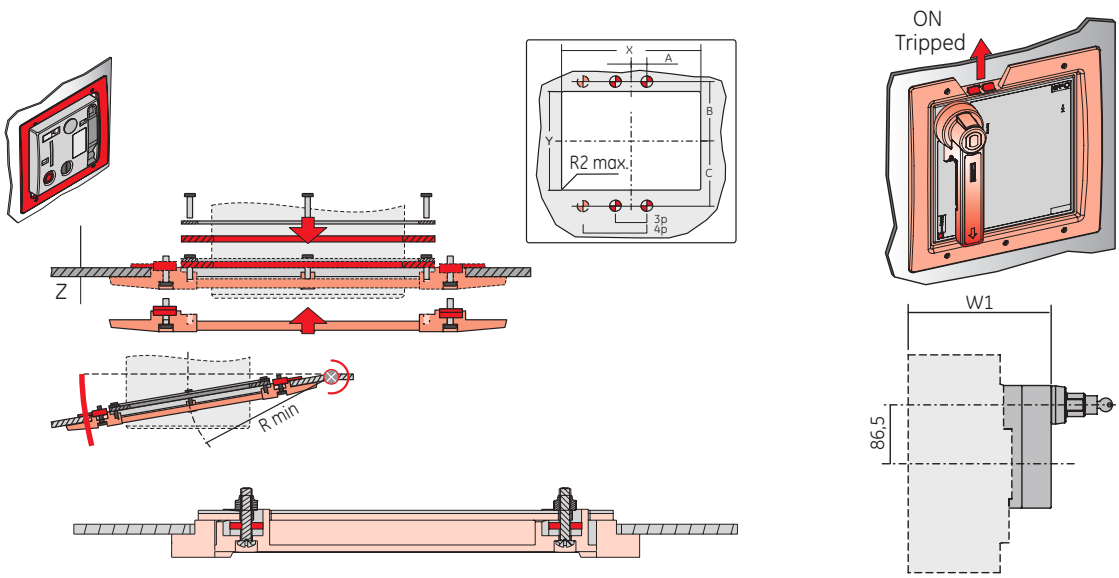

Dimensions									
3 + 4 pole versions		A	B	C	Rmin	W1(max)	X	Y	Z
FNFE	FK 800/1250/1600 Electr. operator	35	129	151	120	220	142	125	1...4
FNFH	FK 800/1250/1600 Rotary handle	35	114	163	190	210	232.5	232.5	1...4

Dimensional Drawings

FK frame, 2 pieces mechanically interlocked

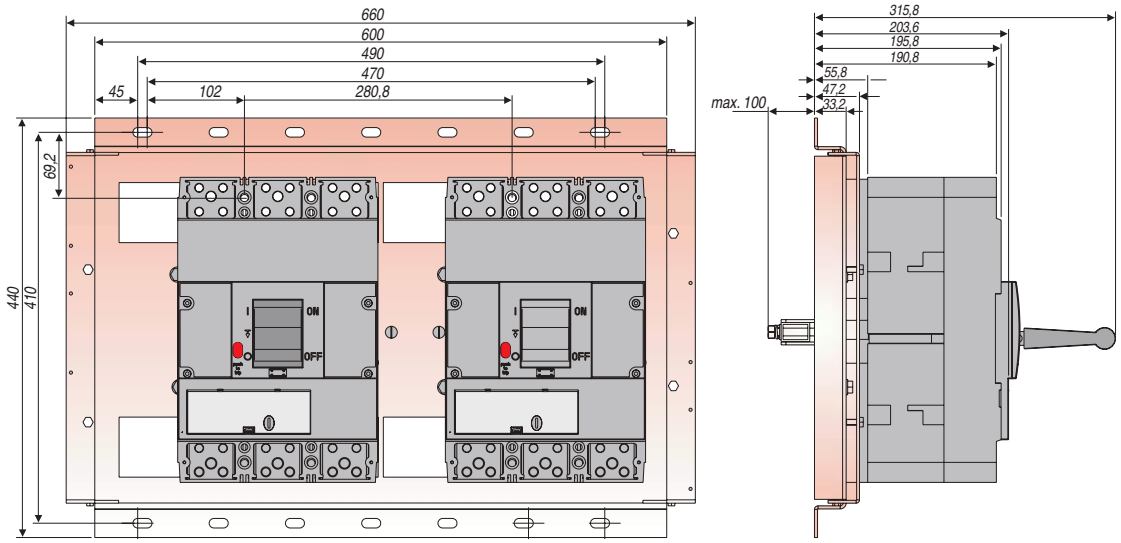

FK frame and FG frame. mechanically interlocked

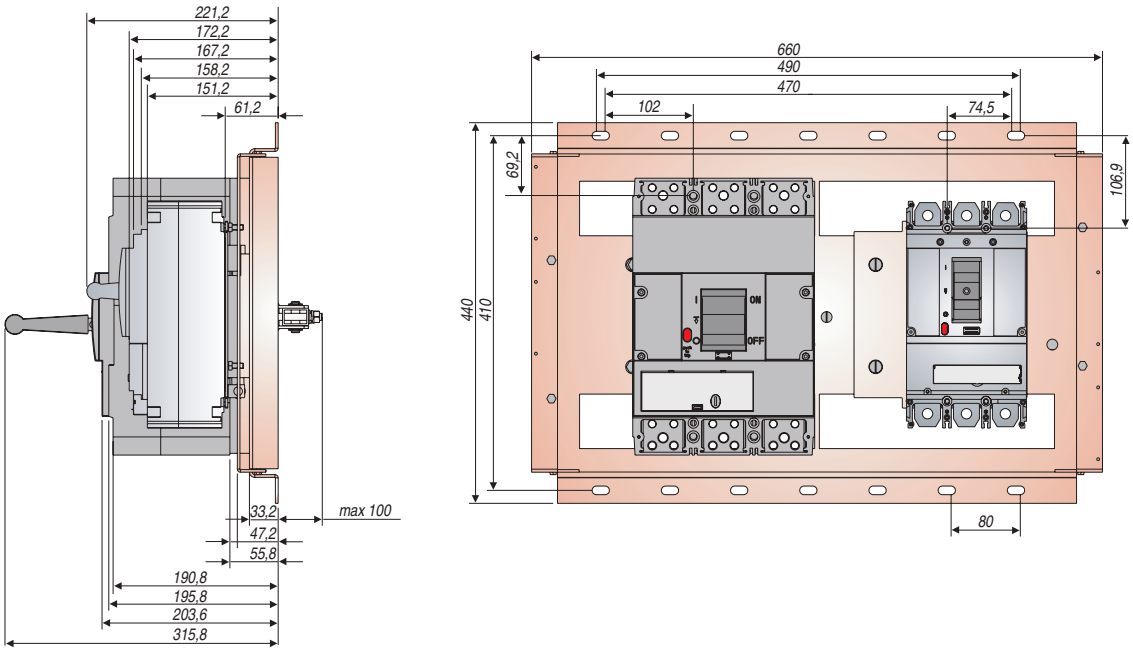

Dimensional Drawings

Breaker with long terminal shields - FK800/1250/1600

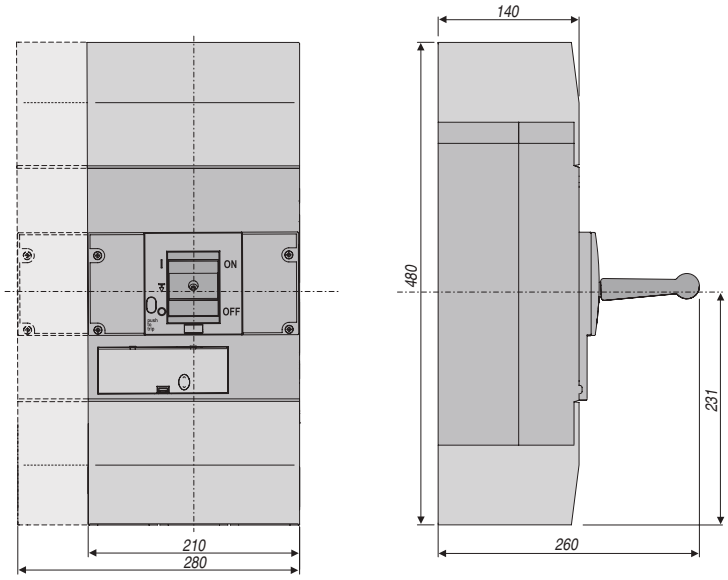

Dimensional Drawings

Connectivity 60 mm system - FD and FE frame 3 pole

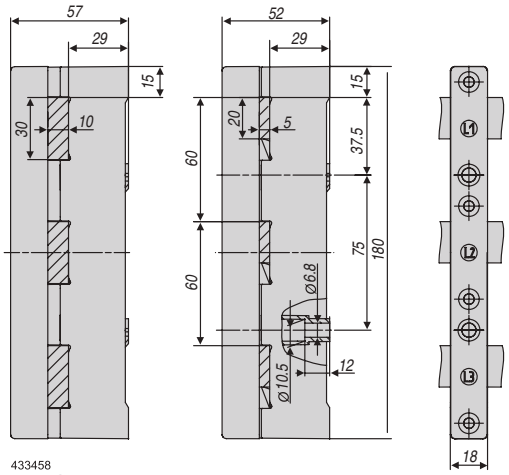

433458
FBB3S

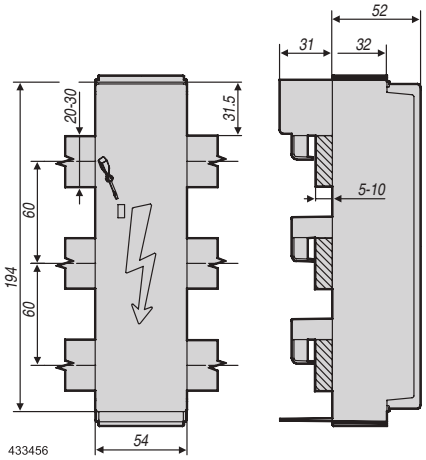

433456
FBTF3L12

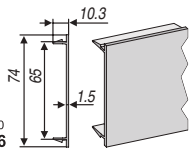

883970
FBF6

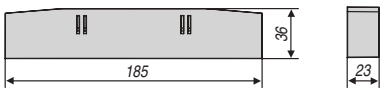

433455
FBB3E

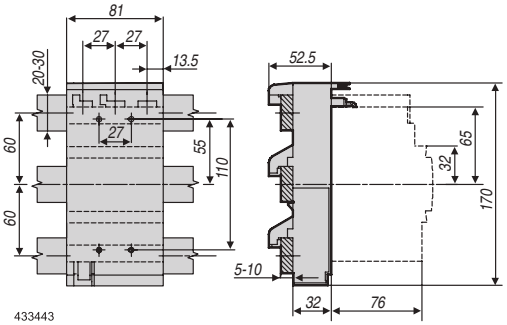

433443
FBAD3 **FD frame 3p**

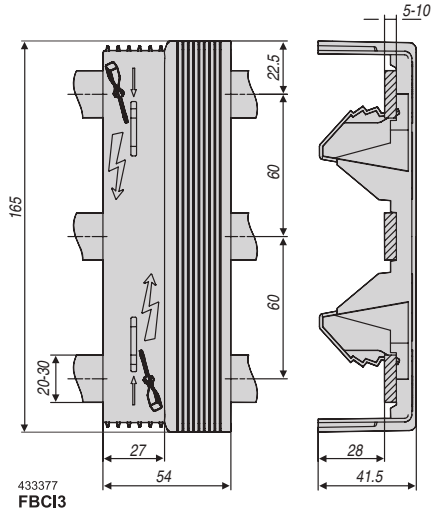

433377
FBCI3

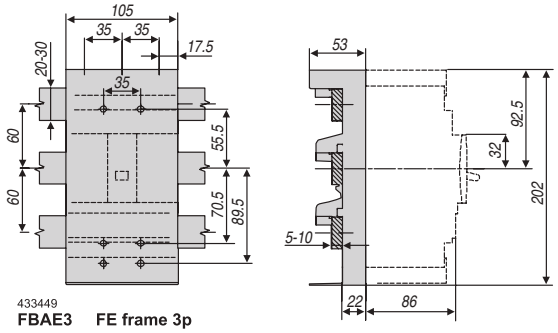

433449
FBAE3 **FE frame 3p**

Dimensional Drawings

Connectivity 60 mm system - FD and FE frame 4 pole

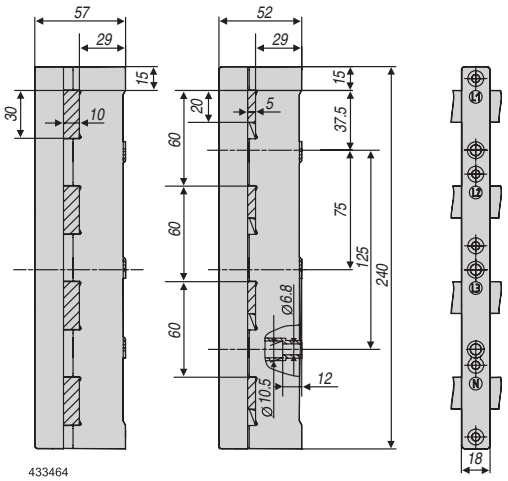

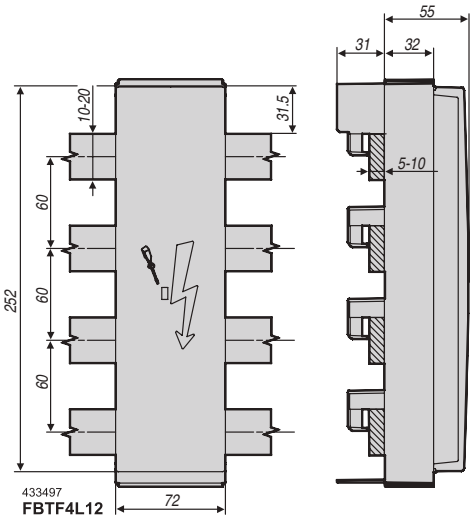

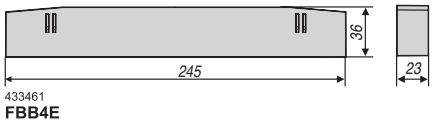

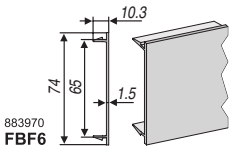

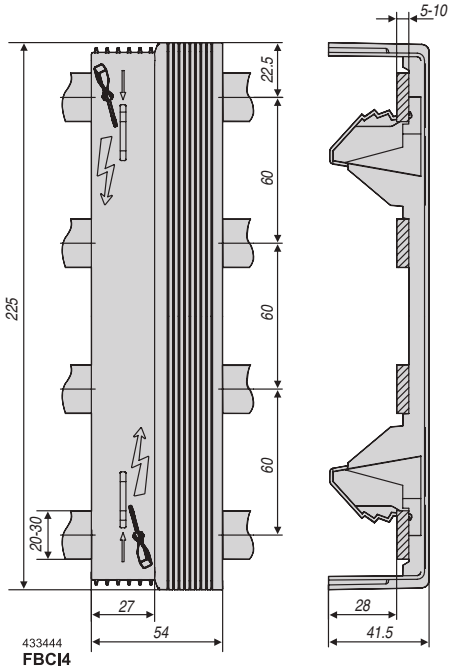

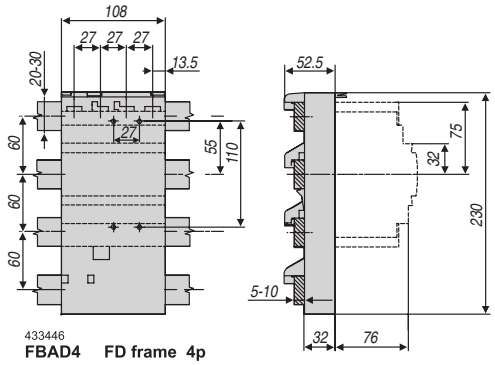

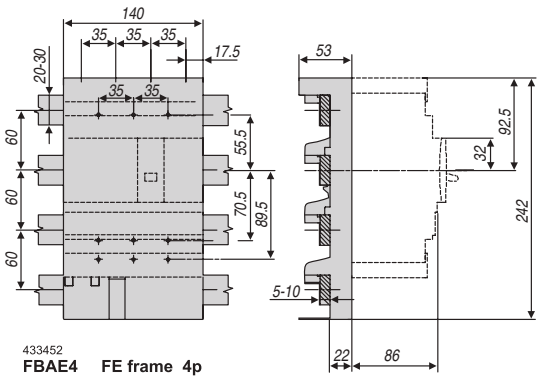

Dimensional Drawings

FG & FK frame, external groundfault sensors

FG type

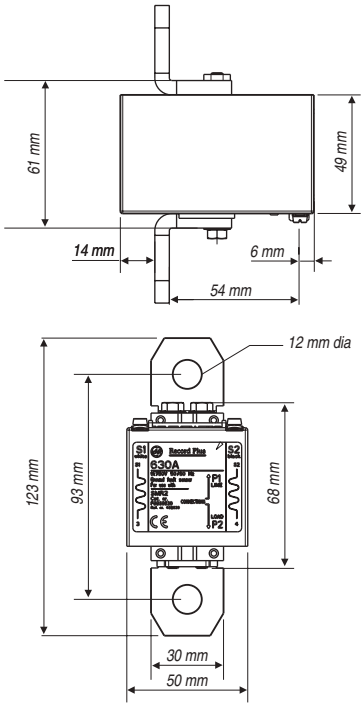

FK type

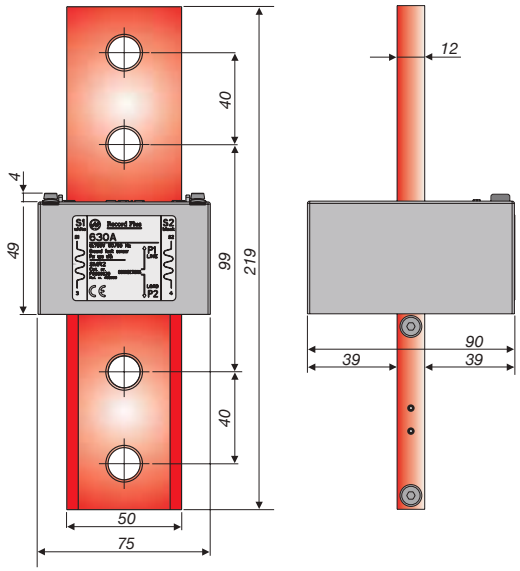

Dimensional Drawings

FG frame SMR2 trip unit accessory; FACM module

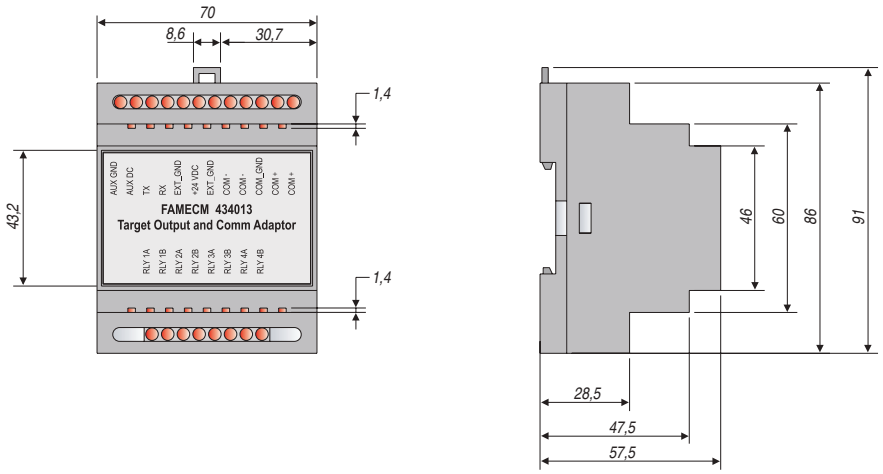

Relay RD5 and RD6

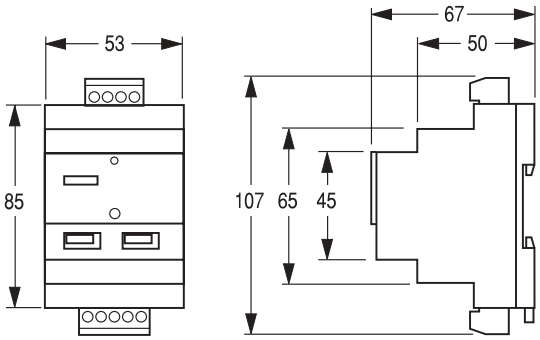

Rectangular sensor

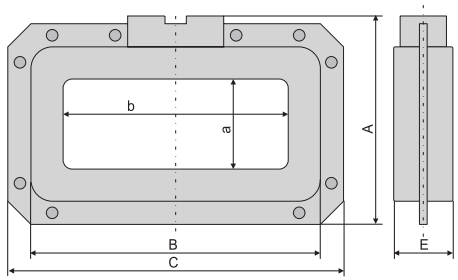

Dimensions					
	a x b	A	B	C	E
BTR 175	70x175	162	225	261	46
BTR 305	115x305	226	360	402	55
BTR 350	130x350	271	415	460	55

Circular sensor

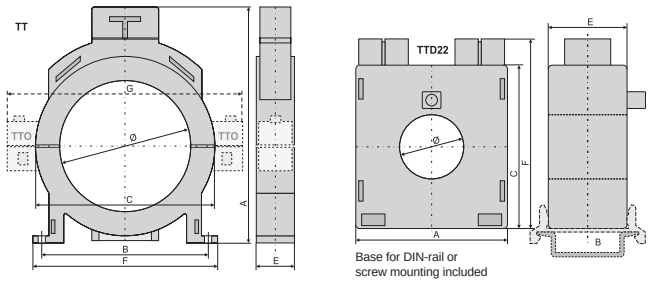

Dimensions							
	Ø	A	B	C	E	F	G
TTD22	22	52	21	56	27	65	-
TT35	35	118	90	78.5	27	104	-
TT60	60	143	102	94.5	27	117	-
TT80	80	163	110	114.5	27	125	-
TT110	110	198	140	150.5	32	155	-
TT160	160	248	181	200.5	32	197	-
TT210	210	298	210	250.5	32	227	-
TT0110	110	198	140	150.5	32	155	198
TT0210	210	298	210	250.5	32	227	296

Just rel

The breaker Intro
Order codes A
Trip units B
Components & Accessories C
Technical data D
Application guide E
Wiring diagrams F
Dimensions G
Numerical Index X

X.2 By reference number
X.9 By catalogue number

y on us

Ref. no.	Cat. no.	Page
430000		
430001	FDE36TC016EF	A.5
430002	FDE36TC020EF	A.5
430003	FDE36TC025EF	A.5
430004	FDE36TC032EF	A.5
430005	FDE36TC040EF	A.5
430006	FDE36TC050EF	A.5
430007	FDE36TC063EF	A.5
430008	FDE46TC016EF	A.5
430009	FDE46TC020EF	A.5
430010	FDE46TC025EF	A.5
430011	FDE46TC032EF	A.5
430012	FDE46TC040EF	A.5
430013	FDE46TC050EF	A.5
430014	FDE46TC063EF	A.5
430015	FDH36MC007ED	A.7
430016	FDH36MC012ED	A.7
430017	FDH36MC020ED	A.7
430018	FDH36MC030ED	A.7
430019	FDH36MC050ED	A.7
430020	FDH36TD016ED	A.6
430021	FDH36TD020ED	A.6
430022	FDH36TD025ED	A.6
430023	FDH36TD032ED	A.6
430024	FDH36TD040ED	A.6
430025	FDH36TD050ED	A.6
430026	FDH36TD063ED	A.6
430027	FDH36TG025ED	A.7
430028	FDH36TG032ED	A.7
430029	FDH36TG040ED	A.7
430030	FDH36TG050ED	A.7
430031	FDH36TG063ED	A.7
430032	FDH436MC007ED	A.7
430033	FDH436MC012ED	A.7
430034	FDH436MC020ED	A.7
430035	FDH436MC030ED	A.7
430036	FDH436MC050ED	A.7
430037	FDH436TD016ED	A.6
430038	FDH436TD020ED	A.6
430039	FDH436TD025ED	A.6
430040	FDH436TD032ED	A.6
430041	FDH436TD040ED	A.6
430042	FDH436TD050ED	A.6
430043	FDH436TD063ED	A.6
430044	FDH436TG025ED	A.7
430045	FDH436TG032ED	A.7
430046	FDH436TG040ED	A.7
430047	FDH436TG050ED	A.7
430048	FDH436TG063ED	A.7
430049	FDH456TD063ED	A.6
430050	FDH456TG063ED	A.7
430051	FDH46TD016ED	A.6
430052	FDH46TD020ED	A.6
430053	FDH46TD025ED	A.6
430054	FDH46TD032ED	A.6
430055	FDH46TD040ED	A.6
430056	FDH46TD050ED	A.6
430057	FDH46TD063ED	A.6
430058	FDH46TG025ED	A.7
430059	FDH46TG032ED	A.7
430060	FDH46TG040ED	A.7
430061	FDH46TG050ED	A.7
430062	FDH46TG063ED	A.7
430065	FDL36MC020ED	A.7
430066	FDL36MC030ED	A.7
430067	FDL36MC050ED	A.7
430068	FA1BRH	A.9
430069	FDJK	A.10
430070	FDL36TD025ED	A.6
430071	FDL36TD032ED	A.6
430072	FDL36TD040ED	A.6
430073	FDL36TD050ED	A.6
430074	FDL36TD063ED	A.6
430077	FDL436MC020ED	A.7
430078	FDL436MC030ED	A.7
430079	FDL436MC050ED	A.7
430082	FDL436TD025ED	A.6
430083	FDL436TD032ED	A.6
430084	FDL436TD040ED	A.6
430085	FDL436TD050ED	A.6
430086	FDL436TD063ED	A.6
430087	FDL456TD063ED	A.6
430088	FA1BR1	A.9
430089	FA1BR2	A.9
430090	FDL46TD025ED	A.6
430091	FDL46TD032ED	A.6
430092	FDL46TD040ED	A.6
430093	FDL46TD050ED	A.6
430094	FDL46TD063ED	A.6
430095	FDN36MC007ED	A.7
430096	FDN36MC012ED	A.7
430097	FDN36MC020ED	A.7
430098	FDN36MC030ED	A.7
430099	FDN36MC050ED	A.7
430100	FDN36TD016ED	A.6
430101	FDN36TD020ED	A.6
430102	FDN36TD025ED	A.6
430103	FDN36TD032ED	A.6
430104	FDN36TD040ED	A.6
430105	FDN36TD050ED	A.6
430106	FDN36TD063ED	A.6
430107	FDN36TG025ED	A.7
430108	FDN36TG032ED	A.7
430109	FDN36TG040ED	A.7
430110	FDN36TG050ED	A.7
430111	FDN36TG063ED	A.7
430112	FDN436MC007ED	A.7
430113	FDN436MC012ED	A.7
430114	FDN436MC020ED	A.7
430115	FDN436MC030ED	A.7
430116	FDN436MC050ED	A.7
430117	FDN436TD016ED	A.6
430118	FDN436TD020ED	A.6
430119	FDN436TD025ED	A.6
430120	FDN436TD032ED	A.6
430121	FDN436TD040ED	A.6
430122	FDN436TD050ED	A.6
430123	FDN436TD063ED	A.6
430124	FDN436TG025ED	A.7
430125	FDN436TG032ED	A.7
430126	FDN436TG040ED	A.7
430127	FDN436TG050ED	A.7
430128	FDN436TG063ED	A.7
430129	FDN456TD063ED	A.6
430130	FDN456TG063ED	A.7
430131	FDN46TD016ED	A.6
430132	FDN46TD020ED	A.6
430133	FDN46TD025ED	A.6
430134	FDN46TD032ED	A.6
430135	FDN46TD040ED	A.6
430136	FDN46TD050ED	A.6
430137	FDN46TD063ED	A.6
430138	FDN46TG025ED	A.7
430139	FDN46TG032ED	A.7
430140	FDN46TG040ED	A.7
430141	FDN46TG050ED	A.7
430142	FDN46TG063ED	A.7
430143	FDN66TD016ED	A.6
430144	FDN66TD020ED	A.6
430145	FDN66TD025ED	A.6
430146	FDN66TD032ED	A.6
430147	FDN66TD040ED	A.6
430148	FDN66TD050ED	A.6
430149	FDN66TD063ED	A.6
430150	FDY306D063ED	A.7
430151	FDY406D063ED	A.7
430161	FDS36TD016ED	A.6
430163	FDS36TD020ED	A.6
430165	FDS36TD025ED	A.6
430167	FDS36TD032ED	A.6
430169	FDS36TD040ED	A.6
430178	FDS36TD050ED	A.6
430224	FDS46TD016ED	A.6
430226	FDS46TD020ED	A.6
430228	FDS46TD025ED	A.6
430230	FDS46TD032ED	A.6
430232	FDS46TD040ED	A.6
430241	FDS46TD050ED	A.6
430276	FDE36TC080GF	A.5
430279	FDE36TC100GF	A.5
430282	FDE36TC125GF	A.5
430299	FDE46TC080GF	A.5
430302	FDE46TC100GF	A.5
430305	FDE46TC125GF	A.5
430318	FDH36MC080GD	A.7
430321	FDH36MC100GD	A.7
430338	FDH36TD080GD	A.6
430341	FDH36TD100GD	A.6
430344	FDH36TD125GD	A.6
430357	FDH36TG080GD	A.7
430360	FDH36TG100GD	A.7
430363	FDH36TG125GD	A.7
430376	FDH436MC080GD	A.7
430379	FDH436MC100GD	A.7
430396	FDH436TD080GD	A.6
430399	FDH436TD100GD	A.6
430402	FDH436TD125GD	A.6
430415	FDH436TG080GD	A.7
430418	FDH436TG100GD	A.7
430421	FDH436TG125GD	A.7
430426	FDH456TD080GD	A.6
430429	FDH456TD100GD	A.6
430432	FDH456TD125GD	A.6
430437	FDH456TG080GD	A.7
430440	FDH456TG100GD	A.7
430443	FDH456TG125GD	A.7
430460	FDH46TD080GD	A.6
430463	FDH46TD100GD	A.6
430466	FDH46TD125GD	A.6
430479	FDH46TG080GD	A.7
430482	FDH46TG100GD	A.7
430485	FDH46TG125GD	A.7
430498	FDL36MC080GD	A.7
430501	FDL36MC100GD	A.7
430504	FA1BR3	A.9
430505	FA1BR4	A.9
430506	FA1BR5	A.9
430507	FA1BR6	A.9
430518	FDL36TD080GD	A.6
430521	FDL36TD100GD	A.6
430524	FDL36TD125GD	A.6
430537	FDL436MC080GD	A.7
430540	FDL436MC100GD	A.7
430544	FGFE	A.33
430545	FGFH	A.33
430546	FDS36T5D016ED	A.8
430557	FDL436TD080GD	A.6
430560	FDL436TD100GD	A.6
430563	FDL436TD125GD	A.6
430568	FDL456TD080GD	A.6
430571	FDL456TD100GD	A.6
430574	FDL456TD125GD	A.6
430577	FDS36T5D020ED	A.8
430578	FDS36T5D025ED	A.8
430579	FDS36T5D032ED	A.8
430580	FDS36T5D040ED	A.8
430591	FDL46TD080GD	A.6
430594	FDL46TD100GD	A.6
430597	FDL46TD125GD	A.6
430610	FDN36MC080GD	A.7
430613	FDN36MC100GD	A.7
430630	FDN36TD080GD	A.6
430633	FDN36TD100GD	A.6
430636	FDN36TD125GD	A.6
430649	FDN36TG080GD	A.7
430652	FDN36TG100GD	A.7
430655	FDN36TG125GD	A.7
430668	FDN436MC080GD	A.7
430671	FDN436MC100GD	A.7
430688	FDN436TD080GD	A.6
430691	FDN436TD100GD	A.6
430694	FDN436TD125GD	A.6
430707	FDN436TG080GD	A.7
430710	FDN436TG100GD	A.7
430713	FDN436TG125GD	A.7
430718	FDN456TD080GD	A.6
430721	FDN456TD100GD	A.6
430724	FDN456TD125GD	A.6
430729	FDN456TG080GD	A.7
430732	FDN456TG100GD	A.7
430735	FDN456TG125GD	A.7
430752	FDN46TD080GD	A.6
430755	FDN46TD100GD	A.6
430758	FDN46TD125GD	A.6
430771	FDN46TG080GD	A.7
430774	FDN46TG100GD	A.7
430777	FDN46TG125GD	A.7
430794	FDN66TD080GD	A.6
430797	FDN66TD100GD	A.6
430800	FDN66TD125GD	A.6
430805	FDY306D160GD	A.7
430810	FDY406D160GD	A.7
430813	FA1BPH	A.9
430814	FDS36T5D050ED	A.8
430815	FABAT01	A.9
430816	FDS36T5D063ED	A.8
430817	FDS36T5D080GD	A.8
430818	FABAT10	A.9
430819	FDS36T5D100GD	A.8
430820	FDS36T5D125GD	A.8
430821	FAC	A.11
430822	FDS36T5D160GD	A.8
430823	FAPF8	A.10
430824	FAPFM	A.10
430825	FAPIP	A.10
430826	FAPM8	A.10
430827	FAPPS	A.10
430828	FAS01L	A.9
430829	FDFH	A.11
430830	FDUF3	A.10
430831	FAS01R	A.9
430832	FDUF4	A.10
430833	FDN36T5D016ED	A.8
430834	FAS10L	A.9
430835	FDN36T5D020ED	A.8
430836	FDN36T5D025ED	A.8
430837	FAS10R	A.9
430838	FDN36T5D032ED	A.8
430839	FDN36T5D040ED	A.8
430840	FASHTB	A.9
430841	FDN36T5D050ED	A.8
430842	FDN36T5D063ED	A.8
430843	FASHTD	A.9
430844	FDN36T5D080GD	A.8
430845	FDN36T5D100GD	A.8
430846	FASHTF	A.9
430847	FDN36T5D125GD	A.8
430848	FDN36T5D160GD	A.8
430849	FASHTJ	A.9
430850	FDH36T5D016ED	A.8
430851	FDH36T5D020ED	A.8
430852	FASHTN	A.9
430853	FDH36T5D025ED	A.8
430854	FDH36T5D032ED	A.8
430855	FASHTU	A.9
430857	FDH36T5D040ED	A.8
430858	FAUVDN	A.9
430861	FAUVRD	A.9
430862	FDH36T5D050ED	A.8
430864	FAUVRF	A.9
430866	FDH36T5D063ED	A.8
430867	FAUVRJ	A.9
430870	FAUVRN	A.9
430871	FDH36T5D080GD	A.8
430873	FAUVRU	A.9
430874	FDH36T5D100GD	A.8
430875	FDH36T5D125GD	A.8
430876	FD1BPE	A.9
430877	FD1BRE	A.9
430878	FD1PF	A.11
430879	FD1PR	A.11
430880	FDBAM11	A.9
430881	FDH36T5D160GD	A.8
430883	FDBEA3	A.10
430884	FDBEA4	A.10
430885	FDBEH3	A.10
430886	FDBEH4	A.10
430887	FDBES3	A.10
430888	FDBES4	A.10
430889	FDBRC3	A.10
430890	FDBRC4	A.10
430891	FDBSS3	A.10
430892	FDBSS4	A.10
430893	FDDDF3	A.10
430896	FDDDF4	A.10
430899	FDDFF3	A.10
430902	FDDFF4	A.10
430905	FDDMP3	A.10
430908	FDDMP4	A.10
430920	FDEMF8	A.9
430926	FDEMFD	A.9
430929	FDEMFF	A.9
430932	FDEMFH	A.9
430935	FDEMFJ	A.9
430938	FDEMFN	A.9
430941	FDFF3	A.11
430942	FDFF4	A.11
430943	FEFE	A.22
430944	FGDDF3	A.31
430945	FDJB	A.10
430951	FDJL3	A.10
430954	FDJL4	A.10
430957	FDJP	A.10
430960	FDJS3	A.10
430963	FDJS4	A.10
430966	FDKD3	A.11
430967	FDKD4	A.11
430969	FEBAT01	A.19
430970	FEBAT10	A.19
430971	FDNR4	A.9
430986	FDNRE	A.9
430987	FEDFO3	A.20
431000		
431007	FEH36TD100JF	A.13
431021	FEH36TD125JF	A.13
431025	FDUA3	A.11
431026	FDUA4	A.11
431032	FGH36AA400LLF	A.25
431038	FGH36AA630NNF	A.27
431050	FGH306F400LF	A.50
431058	FEV36TA200KF	A.16
431061	FEV36TA250KF	A.16
431064	FGDDF4	A.31
431067	FGH306F400NF	A.51
431073	FGH306F630NF	A.51
431076	FDQDB3H/	A.9
431078	FDQDB3M/	A.9
431080	FDQDB4H/6	A.9
431082	FEV46TA125KF	A.16
431084	FDQDB4M/6	A.9
431086	FDQDI3M/	A.9
431088	FDQDI4M/6	A.9
431090	FDQDS3H/	A.9
431091	FGH36SA400NLF	A.27
431094	FEV46TA200KF	A.16
431095	FDQDS3M/	A.9
431097	FEV46TA250KF	A.16
431101	FDQDS4H/6	A.9
431103	FDQDS4M/6	A.9
431106	FGH46AA400LLF	A.25
431112	FEH36AA125JGF	A.14
431116	FEH36AA125KGF	A.17
431117	FEH36AA160JJF	A.14
431118	FEQDB3HJ/	A.19
431120	FEH36AA160KJF	A.17
431123	FEH36AA250KKF	A.17
431124	FEQDB3HK/	A.19
431126	FEH306F160JF	A.48
431129	FEH306F250KF	A.49
431132	FGH46AA630NNF	A.27
431136	FEQDB3MJ/	A.19
431138	FEH36SA125JGF	A.15
431139	FEQDB3MK/	A.19
431141	FEH36SA160JJF	A.15
431144	FEH36SA160KJF	A.17
431145	FEQDB4HJ/6	A.19
431147	FEH36SA250KKF	A.17
431150	FGH406F400LF	A.50
431151	FEQDB4HK/6	A.19
431153	FGH406F400NF	A.51
431156	FGH406F630NF	A.51
431159	FEQDB4MJ/6	A.19
431161	FEQDB4MK/6	A.19
431163	FGQDB3H/6	A.30
431165	FEH36TA080JF	A.13
431168	FGH436SA400NLF	A.27
431171	FEH36TA100JF	A.13
431172	FGQDB3M/6	A.30
431175	FGQDB4H/6	A.30
431177	FEH36TA125JF	A.13
431181	FGQDB4M/6	A.30
431183	FEH36TA160JF	A.13
431198	FGH456SA400NLF	A.27
431201	FEH46AA125JGF	A.14
431204	FEH46AA160JJF	A.14
431207	FEH46AA160KJF	A.17
431210	FEH46AA250KKF	A.17
431213	FEH406F160JF	A.48
431216	FEH406F250KF	A.49
431219	FEV36T5A125KF	A.18
431220	FEV36T5A160KF	A.18
431221	FEV36T5A200KF	A.18
431222	FEV36T5A225KF	A.18
431223	FEN36T5D100KF	A.18
431224	FEN36T5D125KF	A.18
431225	FEH436SA125JGF	A.15
431226	FEN36T5D160KF	A.18
431228	FEH436SA160JJF	A.15
431229	FEN36T5D200KF	A.18
431231	FEH436SA160KJF	A.17
431232	FEN36T5D225KF	A.18
431234	FEH436SA250KKF	A.17
431235	FEH36T5D125KF	A.18
431240	FGH46SA400NLF	A.27
431244	FEH36T5D160KF	A.18
431245	FEH36T5D200KF	A.18
431246	FGL36AA400LLF	A.25
431247	FEH36T5D225KF	A.18
431249	FGL36AA630NNF	A.27
431252	FEH436TA080JF	A.13
431258	FEH436TA100JF	A.13
431261	FGL306F400LF	A.50
431264	FEH436TA125JF	A.13
431267	FGL306F400NF	A.51
431270	FEH436TA160JF	A.13
431282	FGL306F630NF	A.51
431285	FEH456SA125JGF	A.15
431288	FEH456SA160JJF	A.15
431291	FEH456SA160KJF	A.17
431294	FEH456SA250KKF	A.17
431300	FEH456TA080JF	A.13
431301	FGH36JA5500NNF	A.29
431303	FGH36JA5400LLF	A.29
431304	FGN36JA5500NNF	A.29
431305	FGN36JA5400LLF	A.29
431306	FEH456TA100JF	A.13
431309	FGL36SA400NLF	A.27
431312	FEH456TA125JF	A.13
431318	FEH456TA160JF	A.13
431330	FGL46AA400LLF	A.25
431333	FGL46AA630NNF	A.27
431336	FEH46SA125JGF	A.15
431339	FEH46SA160JJF	A.15
431342	FEH46SA160KJF	A.17
431345	FEH46SA250KKF	A.17
431351	FGL406F400LF	A.50
431354	FGL406F400NF	A.51
431357	FGL406F630NF	A.51
431363	FEH46TA080JF	A.13
431369	FEH46TA100JF	A.13
431372	FGL436SA400NLF	A.27
431375	FEH46TA125JF	A.13
431381	FEH46TA160JF	A.13
431393	FEH36TD125KF	A.16
431403	FG1BPE	A.30

Ref. no.	Cat. no.	Page
431404	FG1BRE	A.30
431405	FEL36AA125JGF	A.14
431406	FAZ	A.22
431408	FG1PF	A.33
431409	FG1PR	A.33
431410	FEL36AA160JJF	A.14
431413	FEL36AA160KJF	A.17
431416	FEL36AA250KKF	A.17
431419	FEL306F160JF	A.48
431422	FEL306F250KF	A.49
431425	FGL456SA400NLF	A.27
431431	FEL36SA125JGF	A.15
431434	FEL36SA160JJF	A.15
431437	FEL36SA160KJF	A.17
431440	FEL36SA250KKF	A.17
431449	FGL46SA400NLF	A.27
431455	FGN36AA400LLF	A.25
431458	FEL36TA080JF	A.13
431461	FGN36AA630NNF	A.27
431464	FEL36TA100JF	A.13
431470	FEL36TA125JF	A.13
431473	FGN306F400LF	A.50
431476	FEL36TA160JF	A.13
431488	FGN306F400NF	A.51
431491	FGN306F630NF	A.51
431494	FEL46AA125JGF	A.14
431497	FEL46AA160JJF	A.14
431500	FEL46AA160KJF	A.17
431503	FEL46AA250KKF	A.17
431506	FEL406F160JF	A.48
431509	FEL406F250KF	A.49
431518	FEL436SA125JGF	A.15
431521	FEL436SA160JJF	A.15
431524	FEL436SA160KJF	A.17
431527	FEL436SA250KKF	A.17
431530	FGN36SA400NLF	A.27
431536	FGN46AA400LLF	A.25
431539	FGN46AA630NNF	A.27
431545	FEL436TA080JF	A.13
431548	FGN406F400LF	A.50
431551	FEL436TA100JF	A.13
431554	FGN406F400NF	A.51
431557	FEL436TA125JF	A.13
431560	FGN406F630NF	A.51
431563	FEL436TA160JF	A.13
431578	FEL456SA125JGF	A.15
431581	FEL456SA160JJF	A.15
431584	FEL456SA160KJF	A.17
431587	FEL456SA250KKF	A.17
431593	FEL456TA080JF	A.13
431596	FGN436SA400NLF	A.27
431599	FEL456TA100JF	A.13
431605	FEL456TA125JF	A.13
431611	FEL456TA160JF	A.13
431626	FGN456SA400NLF	A.27
431629	FEL46SA125JGF	A.15
431632	FEL46SA160JJF	A.15
431635	FEL46SA160KJF	A.17
431638	FEL46SA250KKF	A.17
431650	FGN46SA400NLF	A.27
431656	FEL46TA080JF	A.13
431659	FGY306D400LF	A.26
431662	FEL46TA100JF	A.13
431665	FGY306D630NF	A.28
431668	FEL46TA125JF	A.13
431671	FGY406D400LF	A.26
431674	FEL46TA160JF	A.13
431687	FGY406D630NF	A.28
431698	FEN36AA125JGF	A.14
431703	FEN36AA160JJF	A.14
431706	FEN36AA160KJF	A.17
431709	FEN36AA250KKF	A.17
431712	FEN306F160JF	A.48
431715	FEN306F250KF	A.49
431718	FGTAA3L0400	A.50
431721	FGTAA3N0400	A.51
431724	FEN36SA125JGF	A.15
431727	FEN36SA160JJF	A.15
431730	FEN36SA160KJF	A.17
431733	FEN36SA250KKF	A.17
431736	FGTAA3N0630	A.51
431742	FGTAA4L0400	A.50
431745	FGTAA4N0400	A.51
431748	FGTAA4N0630	A.51
431751	FEN36TA080JF	A.13
431757	FEN36TA100JF	A.13
431763	FEN36TA125JF	A.13
431769	FEN36TA160JF	A.13
431787	FEN46AA125JGF	A.14
431790	FEN46AA160JJF	A.14
431793	FEN46AA160KJF	A.17
431796	FEN46AA250KKF	A.17
431799	FEN406F160JF	A.48
431802	FEN406F250KF	A.49
431811	FEN436SA125JGF	A.15
431814	FEN436SA160JJF	A.15
431817	FEN436SA160KJF	A.17
431820	FEN436SA250KKF	A.17
431824	FEH46AA125KGF	A.17
431836	FEL36AA125KGF	A.17
431838	FEN436TA080JF	A.13
431842	FEDFQ4	A.20
431844	FEN436TA100JF	A.13
431850	FEN436TA125JF	A.13
431856	FEN436TA160JF	A.13
431870	FGGS0250	A.33
431871	FEN456SA125JGF	A.15
431874	FEN456SA160JJF	A.15
431877	FEN456SA160KJF	A.17
431880	FEN456SA250KKF	A.17
431886	FEN456TA080JF	A.13
431890	FEL46AA125KGF	A.17
431892	FEN456TA100JF	A.13
431898	FEN456TA125JF	A.13
431904	FEN456TA160JF	A.13
431920	FEN36AA125KGF	A.17
431922	FEN46SA125JGF	A.15
431925	FEN46SA160JJF	A.15
431928	FEN46SA160KJF	A.17
431931	FEN46SA250KKF	A.17
431938	FEN46AA125KGF	A.17
431949	FEN46TA080JF	A.13
431955	FEN46TA100JF	A.13
431960	FAUVRB	A.9
431961	FEN46TA125JF	A.13
431965	FEH36TD160JF	A.13
431967	FEN46TA160JF	A.13
431980	FEH36TD160KF	A.16
431983	FGDFF3	A.31
431986	FGDFF4	A.31
431988	FEY306D160JF	A.15
431991	FEY306D250KF	A.17
431994	FEY406D160JF	A.15
431997	FEY406D250KF	A.17
432000		
432000	FABAM01	A.19
432003	FABAM10	A.19
432004	FETAA3K0125	A.49
432007	FETAA4K0125	A.49
432010	FDFE	A.11
432011	FE1BPE	A.19
432012	FE1BRE	A.19
432017	FE1PF	A.22
432018	FEBE43	A.21
432019	FEBE44	A.21
432020	FEBE93	A.21
432021	FEBE94	A.21
432022	FEBEA3	A.21
432023	FEBEA4	A.21
432024	FEBEH3	A.21
432025	FEBEH4	A.21
432026	FEBES3	A.21
432027	FEBES4	A.21
432028	FEBRC3	A.21
432029	FEBRC4	A.21
432032	FEBSS3	A.21
432033	FEBSS4	A.21
432034	FEDDF3	A.20
432037	FEDDF4	A.20
432040	FEDFF3	A.20
432043	FEDFF4	A.20
432046	FEDMP3	A.20
432049	FEDMP4	A.20
432052	FEEMFD	A.19
432055	FEEMFF	A.19
432058	FEEMFH	A.19
432061	FEEMFJ	A.19
432064	FEEMFN	A.19
432067	FEFF3	A.22
432068	FEFF4	A.22
432071	FEFT	A.22
432073	FEJB	A.22
432076	FEH36TD200KF	A.16
432079	FEJL3	A.22
432082	FEJL4	A.22
432085	FEJP	A.22
432088	FEJS3	A.22
432091	FEJS4	A.22
432096	FEH36TD250KF	A.16
432099	FENR4	A.19
432120	FENRW	A.19
432156	FETCA1316	A.21
432157	FETCA1320	A.21
432158	FETCA1416	A.21
432159	FETCA1420	A.21
432160	FETCA1323	A.21
432161	FETCA1423	A.21
432162	FEUA3	A.22
432163	FEUA4	A.22
432174	FERJ3B0016	A.14
432177	FERJ3B0025	A.14
432180	FERJ3E0040	A.14
432183	FERJ3E0063	A.14
432186	FERJ3G0080	A.14
432189	FERJ3J0100	A.14
432190	FEBRCS3	A.21
432191	FEBRCS4	A.21
432192	FERJ3G0125	A.14
432195	FERJ3J0160	A.14
432198	FEH436TD100JF	A.13
432204	FERJ3K0160	A.17
432205	FEH436TD125JF	A.13
432207	FERJ3K0250	A.17
432209	FEH436TD125KF	A.16
432210	FERJ43B0016	A.14
432213	FERJ43B0025	A.14
432214	FEH436TD160JF	A.13
432216	FERJ43E0040	A.14
432218	FEH436TD160KF	A.16
432219	FERJ43E0063	A.14
432222	FERJ43G0080	A.14
432223	FEH436TD200KF	A.16
432225	FERJ43J0100	A.14
432227	FEH436TD250KF	A.16
432228	FERJ43G0125	A.14
432231	FERJ43J0160	A.14
432240	FERJ43K0160	A.17
432242	FEH456TD100JF	A.13
432243	FERJ43K0250	A.17
432249	FERJ45E0063	A.14
432250	FEH456TD125JF	A.13
432252	FERJ45G0080	A.14
432254	FEH456TD125KF	A.16
432255	FERJ45J0100	A.14
432258	FERJ45G0125	A.14
432259	FEH456TD160JF	A.13
432261	FERJ45J0160	A.14
432263	FEH456TD160KF	A.16
432266	FEH456TD200KF	A.16
432269	FEH456TD250KF	A.16
432270	FERJ45K0160	A.17
432273	FERJ45K0250	A.17
432276	FERJ4B0016	A.14
432279	FERJ4B0025	A.14
432282	FERJ4E0040	A.14
432285	FERJ4E0063	A.14
432287	FEH46TD100JF	A.13
432288	FERJ4G0080	A.14
432291	FERJ4J0100	A.14
432294	FERJ4G0125	A.14
432296	FEH46TD125JF	A.13
432297	FERJ4J0160	A.14
432300	FEH46TD125KF	A.16
432303	FEH46TD160JF	A.13
432306	FERJ4K0160	A.17
432307	FEH46TD160KF	A.16
432309	FERJ4K0250	A.17
432311	FEH46TD200KF	A.16
432312	FERS3B0025	A.15
432315	FERS3E0063	A.15
432316	FEH46TD250KF	A.16
432318	FERS3G0125	A.15
432321	FERS3J0160	A.15
432327	FERS3K0250	A.17
432330	FERS43B0025	A.15
432332	FEL36TD100JF	A.13
432333	FERS43E0063	A.15
432336	FERS43G0125	A.15
432339	FERS43J0160	A.15
432341	FEL36TD125JF	A.13
432344	FEL36TD125KF	A.16
432345	FERS43K0250	A.17
432348	FERS45E0063	A.15
432349	FEL36TD160JF	A.13
432351	FERS45G0125	A.15
432353	FEL36TD160KF	A.16
432354	FERS45J0160	A.15
432357	FEL36TD200KF	A.16
432360	FERS45K0250	A.17
432361	FEL36TD250KF	A.16
432363	FERS4B0025	A.15
432366	FERS4E0063	A.15
432369	FERS4G0125	A.15
432372	FERS4J0160	A.15
432374	FEL436TD100JF	A.13
432378	FERS4K0250	A.17
432391	FETTA43J0025	A.48
432394	FETTA43J0032	A.48
432397	FETTA43J0040	A.48
432400	FETTA43J0050	A.48
432403	FETTA43J0063	A.48
432406	FETTA43J0080	A.48
432409	FETTA43J0100	A.48
432412	FETTA43J0125	A.48
432414	FETAA3J0025	A.48
432416	FEV36TA125KF	A.16
432417	FETAA3J0063	A.48
432420	FETAA3J0125	A.48
432423	FETAA3J0160	A.48
432426	FETAA3K0160	A.49
432429	FETAA3K0250	A.49
432432	FETAA4J0025	A.48
432435	FETAA4J0063	A.48
432438	FETAA4J0125	A.48
432441	FETAA4J0160	A.48
432444	FETAA4K0160	A.49
432447	FETAA4K0250	A.49
432480	FETD30J0160	A.48
432483	FETD30K0250	A.49
432486	FETD40J0160	A.48
432489	FETD40K0250	A.49
432495	FETMC3J0012	A.48
432498	FETMC3J0020	A.48
432501	FETMC3J0050	A.48
432504	FETMC3J0100	A.48
432510	FETMC3J0160	A.48
432513	FETMC3K0160	A.49
432516	FETMC3K0250	A.49
432528	FETMC43J0050	A.48
432531	FETMC43J0100	A.48
432537	FETMC43J0160	A.48
432538	FEWB3	A.20
432540	FETMC43K0160	A.49
432543	FETMC43K0250	A.49
432544	FEWB4	A.20
432546	FETTA3J0025	A.48
432549	FETTA3J0032	A.48
432550	FGWB3	A.31
432552	FETTA3J0040	A.48
432555	FETTA3J0050	A.48
432556	FGWB4	A.31
432558	FETTA3J0063	A.48
432561	FETTA3J0080	A.48
432564	FETTA3J0100	A.48
432567	FETTA3J0125	A.48
432570	FETTA3J0160	A.48
432573	FEL436TD125JF	A.13
432576	FEL436TD125KF	A.16
432580	FEWT	A.20
432582	FETTA43J0160	A.48
432583	FEWM	A.20
432585	FEL436TD160JF	A.13
432586	FEWN	A.20
432588	FEL436TD160KF	A.16
432589	FEWA2	A.20
432592	FGWT	A.31
432595	FGWM	A.31
432598	FGWN	A.31
432601	FGWA2	A.31
432603	FETTA45J0063	A.48
432604	FGWA3	A.31
432606	FETTA45J0080	A.48
432607	FAS30W	A.20
432609	FETTA45J0100	A.48
432610	FAS33W	A.20
432612	FETTA45J0125	A.48
432613	FA1BRWD	A.20
432615	FETTA45J0160	A.48
432616	FA1BPWD	A.20
432618	FEL436TD200KF	A.16
432619	FAWE	A.20
432621	FEL436TD250KF	A.16
432636	FETTA4J0025	A.48
432639	FETTA4J0032	A.48
432642	FETTA4J0040	A.48
432645	FETTA4J0050	A.48
432648	FETTA4J0063	A.48
432651	FETTA4J0080	A.48
432654	FETTA4J0100	A.48
432657	FETTA4J0125	A.48
432660	FETTA4J0160	A.48
432693	FETTG3J0125	A.48
432696	FETTG3J0160	A.48
432699	FEL456TD100JF	A.13
432705	FETTG3K0160	A.49
432708	FETTG3K0200	A.49
432711	FETTG3K0250	A.49
432717	FETTG43J0125	A.48
432720	FETTG43J0160	A.48
432729	FETTG43K0160	A.49
432732	FETTG43K0200	A.49
432735	FETTG43K0250	A.49
432741	FETTG45J0125	A.48
432744	FETTG45J0160	A.48
432747	FEL456TD125JF	A.13
432753	FETTG45K0160	A.49
432756	FETTG45K0200	A.49
432759	FETTG45K0250	A.49
432774	FETTG4J0125	A.48
432777	FETTG4J0160	A.48
432780	FEL456TD125KF	A.16
432786	FETTG4K0160	A.49
432789	FETTG4K0200	A.49
432792	FETTG4K0250	A.49
432796	FGDMP3	A.31
432799	FGDMP4	A.31
432811	FGEMF8	A.30
432817	FGEMFD	A.30
432820	FGEMFF	A.30
432823	FGEMFH	A.30
432826	FGEMFJ	A.30
432829	FGEMFN	A.30
432834	FEL456TD160JF	A.13
432836	FGFT	A.33
432838	FGGS0400	A.33
432839	FGGS0630	A.33
432840	FGJB	A.33
432843	FEL456TD160KF	A.16
432846	FGJM3	A.33
432849	FGJM4	A.33
432852	FGJP	A.33
432855	FGJS3	A.33
432858	FGJS4	A.33
432861	FGJW3	A.33
432864	FGJW4	A.33
432867	FGNFT	A.30
432868	FEL456TD200KF	A.16
432871	FEL456TD250KF	A.16
432907	FEL46TD100JF	A.13
432908	FGUA3	A.33
432909	FGUA4	A.33
432921	FEL46TD125JF	A.13
432924	FEL46TD125KF	A.16
432927	FEL46TD160JF	A.13
432930	FEL46TD160KF	A.16
432933	FEL46TD200KF	A.16
432936	FEL46TD250KF	A.16
432945	FEN36TD100JF	A.13
432952	FDS36TD063ED	A.6
432953	FEN36TD125JF	A.13
432955	FDS36TD080GD	A.6
432958	FDS36TD100GD	A.6
432961	FDS36TD125GD	A.6
432962	FEN36TD125KF	A.16
432964	FDS46TD063ED	A.6
432967	FDS46TD080GD	A.6
432970	FDS46TD100GD	A.6
432971	FEN36TD160JF	A.13
432973	FDS46TD125GD	A.6
432976	FEN36TD160KF	A.16
432979	FEN36TD200KF	A.16
432982	FEN36TD250KF	A.16
432994	FEN436TD100JF	A.13
433000		
433001	FEN436TD125JF	A.13
433004	FEN436TD125KF	A.16
433007	FEN436TD160JF	A.13
433010	FEN436TD160KF	A.16
433013	FEN436TD200KF	A.16
433016	FEN436TD250KF	A.16
433028	FEN456TD100JF	A.13
433034	FEN456TD125JF	A.13
433037	FEN456TD125KF	A.16
433040	FEN456TD160JF	A.13
433043	FEN456TD160KF	A.16
433046	FEN456TD200KF	A.16
433049	FEN456TD250KF	A.16
433061	FEN46TD100JF	A.13
433067	FEN46TD125JF	A.13
433070	FEN46TD125KF	A.16
433073	FEN46TD160JF	A.13
433076	FEN46TD160KF	A.16
433079	FEN46TD200KF	A.16
433082	FEN46TD250KF	A.16
433142	FGH36AA400NLF	A.27
433148	FGRJ3NL0250	A.27
433151	FGRJ3LL0400	A.25
433154	FGRJ3NN0400	A.27
433157	FGRJ3NN0630	A.27
433159	FETTD3J0100	A.48
433160	FGRJ43NL0250	A.27
433163	FGRJ43LL0400	A.25
433164	FETTD3J0125	A.48
433166	FGRJ43NN0400	A.27
433168	FETTD3J0160	A.48
433169	FGRJ43NN0630	A.27
433172	FGRJ45NL0250	A.27
433175	FGRJ45LL0400	A.25
433178	FGRJ45NN0400	A.27
433181	FGRJ45NN0630	A.27
433182	FETTD3K0125	A.49
433184	FGRJ4NL0250	A.27
433186	FETTD3K0160	A.49
433187	FGRJ4LL0400	A.25
433190	FGRJ4NN0400	A.27

Ref. no.	Cat. no.	Page
433191	FETTD3K0200	A.49
433193	FGRJ4NN0630	A.27
433195	FETTD3K0250	A.49
433201	FETTD43J0100	A.48
433204	FETTD43J0125	A.48
433207	FETTD43J0160	A.48
433216	FETTD43K0125	A.49
433219	FETTD43K0160	A.49
433222	FETTD43K0200	A.49
433225	FETTD43K0250	A.49
433231	FETTD45J0100	A.48
433234	FETTD45J0125	A.48
433235	FGRS3NL0400	A.27
433239	FETTD45J0160	A.48
433241	FGRS43NL0400	A.27
433246	FDH13TF016EF	A.6
433247	FGRS45NL0400	A.27
433252	FETTD45K0125	A.49
433253	FGRS4NL0400	A.27
433255	FDH13TF020EF	A.6
433257	FETTD45K0160	A.49
433260	FETTD45K0200	A.49
433262	FDH13TF025EF	A.6
433263	FETTD45K0250	A.49
433268	FDH13TF032EF	A.6
433269	FETTD4J0100	A.48
433272	FETTD4J0125	A.48
433274	FDH13TF040EF	A.6
433275	FETTD4J0160	A.48
433280	FDH13TF050EF	A.6
433284	FETTD4K0125	A.49
433286	FDH13TF063EF	A.6
433287	FETTD4K0160	A.49
433290	FETTD4K0200	A.49
433292	FDH13TF080GF	A.6
433293	FETTD4K0250	A.49
433296	FETTG3J0100	A.48
433298	FDH13TF100GF	A.6
433304	FDH13TF125GF	A.6
433310	FDH13TF160GF	A.6
433311	FETTG43J0100	A.48
433316	FDN13TF016EF	A.6
433322	FDN13TF020EF	A.6
433326	FETTG45J0100	A.48
433328	FDN13TF025EF	A.6
433332	FETTG4J0100	A.48
433334	FDN13TF032EF	A.6
433340	FDN13TF040EF	A.6
433346	FDN13TF050EF	A.6
433352	FDN13TF063EF	A.6
433357	FDBRCL2	A.10
433358	FDBRCS2	A.10
433376	FAMLT1	A.22
433377	FBCI3	A.43
433400	FDTCA1316	A.10
433401	FDTCA1416	A.10
433415	FN1BRY1	A.39
433416	FN1I2F	A.45
433417	FN1PR	A.40
433419	FNGS0800	A.40
433420	FNBES3R	A.39
433421	FNGS1000	A.40
433422	FNBES4R	A.39
433423	FNBRC3	A.39
433425	FNBRC4	A.39
433426	FNBRCS3	A.39
433427	FNBRCS4	A.39
433434	FNWS3WP	A.39
433436	FNWS3AP	A.39
433438	FNTCA4327	A.39
433439	FNTCA4427	A.39
433440	FNWS4AP	A.39
433442	FNWS4WT	A.39
433443	FBAD3	A.43
433444	FBCI4	A.43
433446	FBAD4	A.43
433449	FBAE3	A.43
433452	FBAE4	A.43
433455	FBB3E	A.43
433456	FBTF3L12	A.43
433458	FBB3S	A.43
433461	FBB4E	A.43
433464	FBB4S	A.43
433468	FBTS1L12	A.43
433474	FBTS10L12	A.43
433489	FDDFQ3	A.10
433492	FDDFQ4	A.10
433497	FBTF4L12	A.43
433500	FAR	A.22
433519	FDN13TF080GF	A.6
433522	FDN13TF100GF	A.6
433525	FDN13TF125GF	A.6
433527	FDN13TF160GF	A.6
433531	FENFT	A.19
433532	FDC35TF016EF	A.5
433539	FDUT	A.11
433540	FEUT	A.22
433541	FGUT	A.33
433553	FDC35TF020EF	A.5
433566	FDE36TC160GF	A.5
433569	FDE46TC160GF	A.5
433572	FDN36TD160GD	A.6
433575	FDN36TG160GD	A.7
433578	FDN436TD160GD	A.6
433581	FDN436TG160GD	A.7
433584	FDN456TD160GD	A.6
433587	FDN456TG160GD	A.7
433590	FDN46TD160GD	A.6
433593	FDN46TG160GD	A.7
433599	FDN66TD160GD	A.6
433602	FDS36TD160GD	A.6
433604	FDS46TD160GD	A.6
433649	FDE36TE016ED	A.5
433651	FDE36TE020ED	A.5
433653	FDE36TE025ED	A.5
433655	FDE36TE032ED	A.5
433657	FDE36TE040ED	A.5
433659	FDE36TE050ED	A.5
433661	FDE36TE063ED	A.5
433663	FDE36TE080GD	A.5
433665	FDE36TE100GD	A.5
433667	FDE36TE125GD	A.5
433669	FDE36TE160GD	A.5
433697	FDE46TE016ED	A.5
433699	FDE46TE020ED	A.5
433701	FDE46TE025ED	A.5
433703	FDE46TE032ED	A.5
433705	FDE46TE040ED	A.5
433707	FDE46TE050ED	A.5
433709	FDE46TE063ED	A.5
433711	FDE46TE080GD	A.5
433713	FDE46TE100GD	A.5
433715	FDE46TE125GD	A.5
433717	FDE46TE160GD	A.5
433864	FDC35TF025EF	A.5
433867	FDC35TF032EF	A.5
433870	FDC35TF040EF	A.5
433873	FDC35TF050EF	A.5
433876	FDC35TF063EF	A.5
433879	FDC35TF080GF	A.5
433882	FDC35TF100GF	A.5
433885	FDC35TF125GF	A.5
433892	FGNRW	A.30
433899	FDC35TF160GF	A.5
433907	FDC35TE016ED	A.5
433911	FDC35TE020ED	A.5
433914	FDC35TE025ED	A.5
433918	FDC35TE032ED	A.5
433924	FDC35TE125GD	A.5
433925	FDC35TE160GD	A.5
433926	FDC45TF016EF	A.5
433928	FDC45TF020EF	A.5
433930	FDC45TF025EF	A.5
433932	FDC45TF032EF	A.5
433934	FDC45TF040EF	A.5
433936	FDC45TF050EF	A.5
433938	FDC45TF063EF	A.5
433940	FDC45TF080GF	A.5
433942	FDC45TF100GF	A.5
433944	FDC45TF125GF	A.5
433946	FDC45TF160GF	A.5
433948	FDC45TE016ED	A.5
433949	FDC45TE020ED	A.5
433950	FDC45TE025ED	A.5
433951	FDC45TE032ED	A.5
433952	FDC45TE040ED	A.5
433953	FDC45TE050ED	A.5
433954	FDC45TE063ED	A.5
434000		
434013	FAMECM	A.26
434028	FGH36KA630NNF	A.28
434041	FGH46KA250LKF	A.26
434042	FGH46KA400LLF	A.26
434043	FGH46KA400NLF	A.28
434044	FGH46KA630NNF	A.28
434049	FGL36KA250LKF	A.26
434050	FGL36KA400LLF	A.26
434051	FGL36KA400NLF	A.28
434052	FGL36KA630NNF	A.28
434068	FGL46KA630NNF	A.28
434073	FGN36KA250LKF	A.26
434092	FGN46KA630NNF	A.28
434201	FGTKA3L0250	A.50
434202	FGTKA3L0400	A.50
434203	FGTKA3N0400	A.51
434204	FGTKA3N0630	A.51
434205	FGTKA4L0250	A.50
434231	FGH306F250LF	A.50
434232	FGH36AA250LKF	A.25
434233	FGH36SA250LKF	A.25
434234	FGH406F250LF	A.50
434235	FGH436SA250LKF	A.25
434236	FGH456SA250LKF	A.25
434237	FGH46AA250LKF	A.25
434238	FGH46SA250LKF	A.25
434239	FGL306F250LF	A.50
434240	FGL36AA250LKF	A.25
434241	FGL36SA250LKF	A.25
434242	FGL406F250LF	A.50
434243	FGL436SA250LKF	A.25
434244	FGL456SA250LKF	A.25
434245	FGL46AA250LKF	A.25
434246	FGL46SA250LKF	A.25
434247	FGN306F250LF	A.50
434248	FGN36AA250LKF	A.25
434249	FGN36SA250LKF	A.25
434250	FGN406F250LF	A.50
434251	FGN436SA250LKF	A.25
434252	FGN456SA250LKF	A.25
434253	FGN46AA250LKF	A.25
434254	FGN46SA250LKF	A.25
434261	FGTKA4L0400	A.50
434263	FGTKA4N0400	A.51
434265	FGTKA4N0630	A.51
434303	FGRS3LK0250	A.25
434307	FGRS43LK0250	A.25
434311	FGRS45LK0250	A.25
434315	FGRS4LK0250	A.25
434319	FGTAA3L0250	A.50
434323	FGTAA4L0250	A.50
434337	FGRJ3LK0160	A.25
434341	FGRJ3LK0250	A.25
434345	FGRJ43LK0160	A.25
434349	FGRJ43LK0250	A.25
434353	FGRJ45LK0160	A.25
434357	FGRJ45LK0250	A.25
434361	FGRJ4LK0160	A.25
434365	FGRJ4LK0250	A.25
434393	FGH36KA350LLF	A.26
434399	FGH36SA400LLF	A.25
434408	FGH436SA400LLF	A.25
434414	FGH456SA400LLF	A.25
434420	FGH46KA350LLF	A.26
434426	FGH46SA400LLF	A.25
434432	FGH46AA400NLF	A.27
434438	FGL36KA350LLF	A.26
434444	FGL36SA400LLF	A.25
434448	FAMB2	A.26
434453	FGL436SA400LLF	A.25
434459	FGL36AA400NLF	A.27
434462	FGL456SA400LLF	A.25
434468	FGL46KA350LLF	A.26
434469	FGRL43LK0160 /7	A.26
434472	FGRL45LK0160 /7	A.26
434474	FGL46SA400LLF	A.25
434481	FGRL45LK0250 /7	A.26
434482	FGRL45LL0400 /7	A.26
434483	FGN36KA350LLF	A.26
434489	FGN36SA400LLF	A.25
434492	FGRL4NL0250/7	A.28
434493	FGRL4NL0400/7	A.28
434496	FGRL4NN0400/7	A.28
434502	FGRL4NN0500/7	A.28
434504	FGN456SA400LLF	A.25
434510	FGN46KA350LLF	A.26
434512	FGRS3NN0500	A.27
434516	FGRS43LL0400	A.25
434521	FGRS43NN0500	A.27
434525	FGRS45LL0400	A.25
434530	FGRS45NN0500	A.27
434532	FGRL4NN0630/7	A.28
434534	FGL46AA400NLF	A.27
434537	FGRS4LL0400	A.25
434542	FGRS4NN0500	A.27
434559	FGRL4LK0160/7	A.26
434561	FGN36AA400NLF	A.27
434562	FGRL4LK0250/7	A.26
434568	FGRL4LL0250/7	A.26
434579	FGRL45LL0250 /7	A.26
434581	FGRL45NN0400 /7	A.28
434582	FGRL4LL0350/7	A.26
434584	FGRL4LL0400/7	A.26
434588	FGRL43NL0250 /7	A.28
434590	FGRL43NL0400 /7	A.28
434592	FGRL45NL0250 /7	A.28
434594	FGRL45NL0400 /7	A.28
434596	FGRL45LL0350 /7	A.26
434597	FGRL45NN0500 /7	A.28
434599	FGRL43LL0250 /7	A.26
434600	FGH36AA500NNF	A.27
434601	FGRL43LL0350 /7	A.26
434605	FGRL43NN0400 /7	A.28
434606	FGH36KA500NNF	A.28
434607	FGRL43NN0500 /7	A.28
434612	FGH36SA500NNF	A.27
434615	FGRL43LK0250 /7	A.26
434617	FGRL43LL0400 /7	A.26
434621	FGH436SA500NNF	A.27
434622	FGRL43NN0630 /7	A.28
434624	FGRL45NN0630 /7	A.28
434627	FGH456SA500NNF	A.27
434630	FGH46AA500NNF	A.27
434633	FGH46KA500NNF	A.28
434636	FGN46AA400NLF	A.27
434642	FGH46SA500NNF	A.27
434645	FGL36AA500NNF	A.27
434651	FGL36KA500NNF	A.28
434657	FGL36SA500NNF	A.27
434663	FGH36BM400LLF	A.25
434666	FGH36BM500NNF	A.27
434669	FGH436BM400LLF	A.25
434672	FGH436BM500NNF	A.27
434675	FGL36BM400LLF	A.25
434678	FGL36BM500NNF	A.27
434681	FGL436BM400LLF	A.25
434684	FGL436BM500NNF	A.27
434687	FGN36BM400LLF	A.25
434690	FGN36BM500NNF	A.27
434693	FGN436BM400LLF	A.25
434696	FGN436BM500NNF	A.27
434735	FGNRE	A.30
434736	FETMC3J0030	A.48
434742	FEH36MC007JF	A.14
434745	FEH36MC012JF	A.14
434748	FEH36MC020JF	A.14
434751	FEH36MC030JF	A.14
434754	FEH36MC050JF	A.14
434757	FEH36MC100JF	A.14
434758	FGL436SA500NNF	A.27
434763	FEH36MC160JF	A.14
434764	FGL456SA500NNF	A.27
434766	FEH36MC160KF	A.16
434769	FEH36MC250KF	A.16
434770	FGL46AA500NNF	A.27
434772	FEH36TA025JF	A.13
434775	FEH36TA032JF	A.13
434778	FEH36TA040JF	A.13
434781	FEH36TA050JF	A.13
434782	FGL46KA500NNF	A.28
434784	FEH36TA063JF	A.13
434801	FKUE3	A.38
434802	FKUE4	A.38
434803	FKZD	A.40
434804	FNJF	A.40
434806	FGL46SA500NNF	A.27
434808	FEH36TG100JF	A.13
434811	FEH36TG125JF	A.13
434812	FGN36AA500NNF	A.27
434817	FEH36TG160JF	A.13
434820	FEH36TG160KF	A.16
434823	FEH36TG200KF	A.16
434824	FGN36KA500NNF	A.28
434826	FEH36TG250KF	A.16
434829	FEH436MC050JF	A.14
434832	FEH436MC100JF	A.14
434835	FGN36SA500NNF	A.27
434838	FEH436MC160JF	A.14
434841	FEH436MC160KF	A.16
434844	FEH436MC250KF	A.16
434847	FEH436TA025JF	A.13
434848	FGN436SA500NNF	A.27
434850	FEH436TA032JF	A.13
434853	FEH436TA040JF	A.13
434856	FEH436TA050JF	A.13
434859	FEH436TA063JF	A.13
434860	FGN456SA500NNF	A.27
434866	FGN46AA500NNF	A.27
434871	FEH456TA063JF	A.13
434872	FGN46KA500NNF	A.28
434883	FEH46TA025JF	A.13
434884	FGN46SA500NNF	A.27
434886	FEH46TA032JF	A.13
434889	FEH46TA040JF	A.13
434892	FEH46TA050JF	A.13
434893	FGTAA3N0500	A.51
434895	FEH46TA063JF	A.13
434899	FGTAA4N0500	A.51
434902	FGTKA3L0350	A.50
434905	FGTKA3N0500	A.51
434908	FGTKA4L0350	A.50
434911	FGTKA4N0500	A.51
434919	FEH46TG100JF	A.13
434922	FEH46TG125JF	A.13
434928	FEH46TG160JF	A.13
434931	FEH46TG160KF	A.16
434934	FEH46TG200KF	A.16
434937	FEH46TG250KF	A.16
434940	FEL36MC007JF	A.14
434943	FEL36MC012JF	A.14
434946	FEL36MC020JF	A.14
434949	FEL36MC030JF	A.14
434952	FEL36MC050JF	A.14
434953	FGH36VA400LLF	A.26
434955	FEL36MC100JF	A.14
434958	FGH36VA630NNF	A.28
434960	FGH436VA400LLF	A.26
434961	FEL36MC160JF	A.14
434964	FEL36MC160KF	A.16
434965	FGH436VA630NNF	A.28
434967	FEL36MC250KF	A.16
434970	FEL36TA025JF	A.13
434971	FGH456VA400LLF	A.26
434973	FEL36TA032JF	A.13
434976	FEL36TA040JF	A.13
434977	FGH456VA630NNF	A.28
434979	FEL36TA050JF	A.13
434982	FEL36TA063JF	A.13
434983	FGH46VA400LLF	A.26
434994	FEL436MC050JF	A.14
434997	FEL436MC100JF	A.14
435000		
435003	FGH46VA630NNF	A.28
435004	FEL436MC160JF	A.14
435005	FKV36NT800PF	A.35
435007	FEL436MC160KF	A.16
435010	FEL436MC250KF	A.16
435013	FEL436TA025JF	A.13
435016	FEL436TA032JF	A.13
435019	FEL436TA040JF	A.13
435022	FEL436TA050JF	A.13
435025	FEL436TA063JF	A.13
435028	FKV36NT100SF	A.36
435030	FKV36NT125SF	A.36
435032	FKV36NE160TTF	A.37
435035	FKV36NE125SSF	A.36
435037	FEL456TA063JF	A.13
435040	FKV36NE100SQF	A.36
435041	FKV36NE800PPF	A.35
435042	FKV46NE800PPF	A.35
435049	FEL46TA025JF	A.13
435052	FEL46TA032JF	A.13
435055	FEL46TA040JF	A.13
435058	FEL46TA050JF	A.13
435061	FEL46TA063JF	A.13
435064	FKV46NT800PF	A.35
435065	FGL36VA400LLF	A.26
435066	FKV46NE100SQF	A.36
435071	FGL36VA630NNF	A.28
435073	FEN36MC007JF	A.14
435076	FEN36MC012JF	A.14
435077	FGL436VA400LLF	A.26
435079	FEN36MC020JF	A.14
435082	FEN36MC030JF	A.14
435083	FKV46NE125SSF	A.36
435085	FEN36MC050JF	A.14
435086	FKV46NT100SF	A.36
435088	FEN36MC100JF	A.14
435089	FKV46NT125SF	A.36
435091	FGL436VA630NNF	A.28
435092	FKV46NE160TTF	A.37
435094	FEN36MC160JF	A.14
435095	FGL456VA400LLF	A.26
435097	FEN36MC160KF	A.16
435100	FEN36MC250KF	A.16
435103	FEN36TA025JF	A.13
435106	FEN36TA032JF	A.13
435109	FEN36TA040JF	A.13
435112	FEN36TA050JF	A.13
435115	FEN36TA063JF	A.13
435118	FASHTH	A.9
435120	FAUVRH	A.9
435122	FGL456VA630NNF	A.28
435127	FDE36TF016EF	A.5
435128	FGL46VA400LLF	A.26
435129	FDE36TF020EF	A.5
435130	FDE36TF025EF	A.5
435132	FDE36TF032EF	A.5
435134	FGL46VA630NNF	A.28
435135	FDE36TF040EF	A.5
435138	FDE36TF050EF	A.5
435139	FEN36TG100JF	A.13
435140	FGN36VA400LLF	A.26
435142	FEN36TG125JF	A.13
435145	FDE36TF063EF	A.5
435146	FGN36VA630NNF	A.28
435147	FDE36TF080GF	A.5
435148	FEN36TG160JF	A.13
435151	FEN36TG160KF	A.16
435152	FGN436VA400LLF	A.26
435154	FEN36TG200KF	A.16
435157	FEN36TG250KF	A.16
435158	FGN436VA630NNF	A.28
435160	FEN436MC050JF	A.14
435163	FEN436MC100JF	A.14
435164	FGN456VA400LLF	A.26

Ref. no.	Cat. no.	Page
435167	FGN456VA630NNF	A.28
435169	FEN436MC160JF	A.14
435170	FGN46VA400LLF	A.26
435172	FEN436MC160KF	A.16
435175	FEN436MC250KF	A.16
435176	FGN46VA630NNF	A.28
435178	FEN436TA025JF	A.13
435181	FEN436TA032JF	A.13
435182	FGRJ3NL0400	A.27
435184	FEN436TA040JF	A.13
435187	FEN436TA050JF	A.13
435188	FGRJ43NL0400	A.27
435190	FEN436TA063JF	A.13
435193	FDE36TF100GF	A.5
435194	FGRJ45NL0400	A.27
435195	FDE36TF125GF	A.5
435200	FGRJ4NL0400	A.27
435202	FEN456TA063JF	A.13
435205	FDE36TF160GF	A.5
435207	FDE46TF016EF	A.5
435214	FEN46TA025JF	A.13
435217	FEN46TA032JF	A.13
435220	FEN46TA040JF	A.13
435223	FEN46TA050JF	A.13
435226	FEN46TA063JF	A.13
435229	FDE46TF020EF	A.5
435231	FDE46TF025EF	A.5
435238	FDE46TF032EF	A.5
435240	FDE46TF040EF	A.5
435242	FDE46TF050EF	A.5
435244	FDE46TF063EF	A.5
435246	FDE46TF080GF	A.5
435248	FDE46TF100GF	A.5
435250	FEN46TG100JF	A.13
435253	FEN46TG125JF	A.13
435256	FDE46TF125GF	A.5
435258	FDE46TF160GF	A.5
435259	FEN46TG160JF	A.13
435262	FEN46TG160KF	A.16
435265	FEN46TG200KF	A.16
435268	FEN46TG250KF	A.16
435273	FKY406DN100SF	A.37
435276	FKH36NE125SSF	A.36
435277	FGN436SA400LLF	A.25
435279	FKH36NE160TTF	A.37
435280	FGN46SA400LLF	A.25
435282	FKL46NE800PPF	A.35
435285	FKH36NE800PPF	A.35
435288	FKH36NE100SQF	A.36
435294	FKH36NG125SSF	A.36
435297	FKH36NG160TTF	A.37
435300	FKN436NT800PF	A.35
435303	FKH36NG800PPF	A.35
435306	FKH36NG100SQF	A.36
435312	FKH36NS125SSF	A.36
435315	FKH36NS160TTF	A.37
435318	FKH36NT800PF	A.35
435321	FKH36NS800PPF	A.35
435324	FKH36NS100SQF	A.36
435330	FKH46NE125SSF	A.36
435333	FKH46NE160TTF	A.37
435336	FKN36NT800PF	A.35
435339	FKH46NE800PPF	A.35
435342	FKH46NE100SQF	A.36
435343	FGRJ3LL0250	A.25
435348	FKH46NG125SSF	A.36
435351	FKH46NG160TTF	A.37
435354	FKH436NT800PF	A.35
435356	FGRJ43LL0250	A.25
435357	FKH46NG800PPF	A.35
435360	FKH46NG100SQF	A.36
435366	FKH46NS125SSF	A.36
435367	FGRJ45LL0250	A.25
435369	FKH46NS160TTF	A.37
435372	FKL36NT800PF	A.35
435375	FKH46NS800PPF	A.35
435378	FKH46NS100SQF	A.36
435381	FKY306DN100SF	A.37
435384	FKN36NE125SSF	A.36
435387	FKN36NE160TTF	A.37
435390	FKL36NE800PPF	A.35
435393	FKN36NE800PPF	A.35
435396	FKN36NE100SQF	A.36
435397	FGRJ4LL0250	A.25
435402	FKN36NG125SSF	A.36
435405	FKN36NG160TTF	A.37
435408	FKN436NT630PF	A.35
435411	FKN36NG800PPF	A.35
435414	FKN36NG100SQF	A.36
435420	FKN36NS125SSF	A.36
435423	FKN36NS160TTF	A.37
435426	FKH36NT630PF	A.35
435429	FKN36NS800PPF	A.35
435432	FKN36NS100SQF	A.36
435435	FGRS3LL0400	A.25

Ref. no.	Cat. no.	Page
435438	FKN46NE125SSF	A.36
435441	FKN46NE160TTF	A.37
435444	FKN36NT630PF	A.35
435447	FKN46NE800PPF	A.35
435450	FKN46NE100SQF	A.36
435456	FKN46NG125SSF	A.36
435459	FKN46NG160TTF	A.37
435462	FKH436NT630PF	A.35
435465	FKN46NG800PPF	A.35
435468	FKN46NG100SQF	A.36
435474	FKN46NS125SSF	A.36
435477	FKN46NS160TTF	A.37
435480	FKL36NT630PF	A.35
435483	FKN46NS800PPF	A.35
435486	FKN46NS100SQF	A.36
435489	FKY306DN125SF	A.37
435492	FKY306DN160TF	A.37
435495	FKY306DN800PF	A.37
435498	FKY406DN125SF	A.37
435501	FKY406DN160TF	A.37
435504	FKY406DN800PF	A.37
435534	FKL436NT630PF	A.35
435535	FKL436NT800PF	A.35
435537	FKN36NM800PF	A.35
435538	FKH36NM800PF	A.35
435539	FKL36NM800PF	A.35
435541	FKN436NM800PF	A.35
435542	FKH436NM800PF	A.35
435543	FKL436NM800PF	A.35
435545	FKL36NE100SQF	A.36
435546	FKL36NE125SSF	A.36
435547	FKL46NE100SQF	A.36
435549	FKL46NE125SSF	A.36
435550	FKN36NT100SF	A.36
435551	FKN36NT125SF	A.36
435553	FKH36NT100SF	A.36
435554	FKH36NT125SF	A.36
435555	FKL36NT100SF	A.36
435557	FKL36NT125SF	A.36
435558	FKN36NM125SF	A.36
435559	FKH36NM125SF	A.36
435561	FKL36NM125SF	A.36
435562	FKN436NT100SF	A.36
435563	FKN436NT125SF	A.36
435565	FKH436NT100SF	A.36
435566	FKH436NT125SF	A.36
435567	FKL436NT100SF	A.36
435569	FKL436NT125SF	A.36
435570	FKN436NM125SF	A.36
435571	FKH436NM125SF	A.36
435573	FKL436NM125SF	A.36
435574	FN1BRY2	A.39
435575	FN1BRW1	A.39
435577	FN1BRW2	A.39
435578	FNFW	A.39
435678	FN1BPE	A.38
435679	FN1BRE	A.38
435692	FNSHT8	A.38
435693	FNSHTD	A.38
435694	FNSHTF	A.38
435695	FNSHTJ	A.38
435696	FNSHTN	A.38
435697	FNUVD6	A.38
435698	FNUVR1	A.38
435699	FNUVR6	A.38
435700	FNUVR8	A.38
435701	FNUVRD	A.38
435702	FNUVRF	A.38
435706	FNBES3P	A.39
435707	FNBES4P	A.39
435708	FNBSS3P	A.39
435709	FNGS1250	A.40
435710	FNBSS3R	A.39
435711	FNBSS4P	A.39
435712	FNBSS4R	A.39
435713	FNFE	A.40
435714	FNFH	A.40
435715	FNFT	A.40
435716	FNJL3	A.40
435719	FNJL4	A.40
435722	FNJP	A.40
435738	FNNRE	A.38
435745	FNNRW	A.38
435757	FNWS3AT	A.39
435758	FNPFM	A.39
435759	FNWS4AT	A.39
435760	FNS11L	A.39
435761	FNBA11R	A.38
435762	FNUA3	A.40
435763	FNUA4	A.40
435764	FNUT	A.40
435812	FEEMF8	A.19
435821	FDH36TD160GD	A.6
435824	FDH36TG160GD	A.7
435827	FDH436TD160GD	A.6

Ref. no.	Cat. no.	Page
435830	FDH436TG160GD	A.7
435833	FDH456TD160GD	A.6
435836	FDH456TG160GD	A.7
435839	FDH46TD160GD	A.6
435842	FDH46TG160GD	A.7
435845	FDL36TD160GD	A.6
435848	FDL436TD160GD	A.6
435851	FDL456TD160GD	A.6
435854	FDL46TD160GD	A.6
435857	FEH36AA025JBF	A.14
435860	FEH36AA063JEF	A.14
435863	FEH46AA025JBF	A.14
435866	FEH46AA063JEF	A.14
435869	FEL36AA025JBF	A.14
435872	FEL36AA063JEF	A.14
435875	FEL46AA025JBF	A.14
435878	FEL46AA063JEF	A.14
435881	FEN36AA025JBF	A.14
435884	FEN36AA063JEF	A.14
435887	FEN46AA025JBF	A.14
435890	FEN46AA063JEF	A.14
435893	FEH36MC080JF	A.14
435896	FEL36MC080JF	A.14
435899	FEN36MC080JF	A.14
435902	FEH436TG100JF	A.13
435903	FEH436TG125JF	A.13
435904	FEH436TG160JF	A.13
435905	FEH436TG160KF	A.16
435906	FEH436TG200KF	A.16
435907	FEH436TG250KF	A.16
435908	FEH456TG160KF	A.16
435909	FEH456TG200KF	A.16
435910	FEH456TG250KF	A.16
435923	FEL36TG100JF	A.13
435926	FEL36TG125JF	A.13
435932	FEL36TG160JF	A.13
435935	FEL36TG160KF	A.16
435938	FEL36TG200KF	A.16
435941	FEL36TG250KF	A.16
435944	FEL436TG100JF	A.13
435947	FEL436TG125JF	A.13
435950	FEL436TG160JF	A.13
435953	FEL436TG160KF	A.16
435956	FEL436TG200KF	A.16
435959	FEL436TG250KF	A.16
435962	FEL456TG100JF	A.13
435965	FEL456TG125JF	A.13
435968	FEL456TG160JF	A.13
435971	FEL456TG160KF	A.16
435974	FEL456TG200KF	A.16
435977	FEL456TG250KF	A.16
435992	FEL46TG100JF	A.13
435995	FEL46TG125JF	A.13
436000		
436002	FEL46TG160JF	A.13
436005	FEL46TG160KF	A.16
436008	FEL46TG200KF	A.16
436011	FEL46TG250KF	A.16
436014	FEN436TG100JF	A.13
436015	FEN436TG125JF	A.13
436016	FEN436TG160JF	A.13
436017	FEN436TG160KF	A.16
436018	FEN436TG200KF	A.16
436019	FEN436TG250KF	A.16
436020	FEN456TG100JF	A.13
436021	FEN456TG125JF	A.13
436022	FEN456TG160JF	A.13
436023	FEN456TG160KF	A.16
436024	FEN456TG200KF	A.16
436025	FEN456TG250KF	A.16
436026	FEH456TG100JF	A.13
436027	FEH456TG125JF	A.13
436028	FEH456TG160JF	A.13
436078	FETMC3J0080	A.48
436117	FDC35TE040ED	A.5
436118	FDC35TE050ED	A.5
436133	FDC35TE063ED	A.5
436143	FDC35TE080GD	A.5
436144	FDC35TE100GD	A.5
436145	FDC45TE080GD	A.5
436146	FDC45TE100GD	A.5
436147	FDC45TE125GD	A.5
436148	FDC45TE160GD	A.5
436150	FGH36KA250LKF	A.26
436151	FGH36KA400LLF	A.26
436152	FGH36KA400NLF	A.28
436153	FGL46KA250LKF	A.26
436154	FGL46KA400LLF	A.26
436155	FGL46KA400NLF	A.28
436156	FGN36KA400LLF	A.26
436157	FGN36KA400NLF	A.28
436158	FGN36KA630NNF	A.28
436159	FGN46KA250LKF	A.26
436160	FGN46KA400LLF	A.26
436161	FGN46KA400NLF	A.28

Ref. no.	Cat. no.	Page
436183	FAMAM2	A.26
436185	FAMGAM2	A.26
436186	FAMGAS2	A.26
436187	FAMGAT2	A.26
436188	FAMGFM2	A.26
436189	FAMGFS2	A.26
436190	FAMGFT2	A.26
436191	FAMMT2	A.26
436192	FAMSM2	A.26
436197	FAMST2	A.26
436316	FNTCA3327	A.39
436321	FNEMFF/M	A.38
436322	FNEMFD/M	A.38
436323	FNEMF3/M	A.38
436324	FNEMF6/M	A.38
436327	FEH36MC125JF	A.14
436329	FEH436MC125JF	A.14
436331	FEL36MC125JF	A.14
436333	FEL436MC125JF	A.14
436335	FEN36MC125JF	A.14
436356	FEN436MC125JF	A.14
436358	FETMC3J0125	A.48
436359	FETMC43J0125	A.48
436361	FEH36MC003JF	A.14
436363	FEL36MC003JF	A.14
436365	FEN36MC003JF	A.14
436396	FDH36MC003ED	A.7
436398	FDH436MC003ED	A.7
436401	FNS11R	A.38
436409	FDN36MC003ED	A.7
436411	FDN436MC003ED	A.7
436458	FNEMFJ/M	A.38
436459	FNEMFN/M	A.38
436467	FEJN3	A.20
436469	FGJN3	A.31
436470	FGJN4	A.31
436471	FNGS1600	A.40
436472	FAUVR8	A.9
436474	FDNRC/	A.9
436475	FDNRCV/	A.9
436476	FDNRD/5	A.9
436477	FDNRDV/5	A.9
436478	FDNRF/5	A.9
436479	FDNRFV/	A.9
436481	FNWS4WP	A.39
436482	FNWS3WT	A.39
436487	FDNRY/5	A.9
436488	FDNRYV/	A.9
436489	FDNRZ/5	A.9
436490	FDNRZV/5	A.9
436491	FENRC/5	A.19
436492	FENRCV/5	A.19
436493	FENRD/5	A.19
436494	FENRDV/5	A.19
436495	FENRF/5	A.19
436496	FENRFV/	A.19
436499	FENRX/5	A.44
436500	FENRY/5	A.19
436501	FENRYV/5	A.19
436502	FENRZ/5	A.19
436503	FENRZV/5	A.19
436504	FGNRC/5	A.30
436505	FGNRCV/5	A.30
436506	FGNRD/5	A.30
436507	FGNRDV/5	A.30
436509	FGNRF/5	A.30
436510	FGNRFV/5	A.30
436512	FGNRX/5	A.44
436513	FGNRY/5	A.30
436514	FGNRYV/5	A.30
436515	FGNRZ/5	A.30
436516	FGNRZV/5	A.30
436517	FNNRC/5	A.38
436518	FNNRCV/5	A.38
436519	FNNRD/5	A.38
436520	FNNRDV/5	A.38
436522	FNNRF/5	A.38
436524	FNNRFV/5	A.38
436526	FNNRX/5	A.44
436527	FNNRY/5	A.38
436528	FNNRYV/5	A.38
436530	FNNRZ/5	A.38
436531	FNNRZV/5	A.38
436582	FDE36T5C016EF	A.8
436583	FDE36T5C020EF	A.8
436584	FDE36T5C025EF	A.8
436588	FDE36T5C032EF	A.8
436589	FDE36T5C040EF	A.8
436591	FDE36T5C050EF	A.8
436593	FDE36T5C063EF	A.8
436594	FDE36T5C080GF	A.8
436595	FDE36T5C100GF	A.8
436596	FDE36T5C125GF	A.8
436600	FDE36T5C160GF	A.8
436651	FNTCA3427	A.39

Ref. no.	Cat. no.	Page
436656	FGRL3LK0250/7	A.26
436720	FDKM1	A.11
436721	FGRL3LL0400/7	A.26
436722	FGRL3NN0630/7	A.28
436726	FGRL3NN0400/7	A.28
436738	FGRL3NN0500/7	A.28
436739	FGRL3NL0250/7	A.28
436746	FGRL3NL0400/7	A.28
436747	FGRL3LL0250/7	A.26
436748	FGRL3LL0350/7	A.26
436749	FGRL3LK0160/7	A.26
436754	FEH36MC200KF	A.16
436755	FEH436MC200KF	A.16
436756	FEL36MC200KF	A.16
436763	FEL436MC200KF	A.16
436764	FEN36MC200KF	A.16
436765	FEN436MC200KF	A.16
436778	FETMC3K0200	A.49
436779	FETMC43K0200	A.49
436798	FEV36TA160KF	A.16
436817	FEV46TA160KF	A.16
436880	FKMF1P	A.38
436881	FKMF2P	A.38
436882	FKMF3P	A.38
436883	FKMF6P	A.38
436884	FKF1S	A.38
436885	FKF2S	A.38
436886	FKF3S	A.38
436887	FKF6S	A.38
437000		
437001	FE1I2	A.45
437005	FG1I2	A.45
437009	FG1I4	A.45
437016	FN1I4F	A.45
437018	FNUVRJ	A.44
560000		
560090	TTD 22	A.39
617000		
617947	FDKE	A.11
704000		
704154	BTR 175	A.39
704155	BTR 305	A.39
704156	BTR 350	A.39
704169	RD5 220	A.39
704175	RD5 110	A.39
704176	RD5 380	A.39
704177	RD6 220	A.39
704178	RD6 110	A.39
704179	RD6 380	A.39
855000		
855085	-	D.11
855087	-	D.11
855088	-	D.11
872000		
872224	RD1D 220	A.39
872225	RD1D 110	A.39
872226	RD1D 380	A.39
872227	RDFR	A.39
872754	TT 35	A.39
872755	TT 60	A.39
872756	TT 80	A.39
872757	TT 110	A.39
872758	TT 160	A.39
872759	TT 210	A.39
872760	TTO 60	A.39
872761	TTO 110	A.39
872762	TTO 210	A.39
880000		
880954	FETCA630A	A.21
880955	FETCA640A	A.21
883000		
883008	-	D.11
883970	FBF6	A.10

Cat. no.	Ref. no.	Page
BT...		
BTR 175	704154	A.39
BTR 305	704155	A.39
BTR 350	704156	A.39
FA...		
FA1BPH	430813	A.9
FA1BPWD	432616	A.20
FA1BR1	430088	A.9
FA1BR2	430089	A.9
FA1BR3	430504	A.9
FA1BR4	430505	A.9
FA1BR5	430506	A.9
FA1BR6	430507	A.9
FA1BRH	430068	A.9
FA1BRWD	432613	A.20
FABAM01	432000	A.19
FABAM10	432003	A.19
FABAT 01	430815	A.9
FABAT01	430815	A.9
FABAT10	430818	A.9
FAC	430821	A.11
FAMAM2	436183	A.26
FAMB2	434448	A.26
FAMECM	434013	A.26
FAMGAM2	436185	A.26
FAMGAS2	436186	A.26
FAMGAT2	436187	A.26
FAMGFM2	436188	A.26
FAMGFS2	436189	A.26
FAMGFT2	436190	A.26
FAMLT1	433376	A.22
FAMMT2	436191	A.26
FAMSM2	436192	A.26
FAMST2	436197	A.26
FAPF8	430823	A.10
FAPFM	430824	A.10
FAPIP	430825	A.10
FAPM8	430826	A.10
FAPPS	430827	A.10
FAR	433500	A.22
FAS01L	430828	A.9
FAS01R	430831	A.9
FAS10L	430834	A.9
FAS10R	430837	A.9
FAS30W	432607	A.20
FAS33W	432610	A.20
FASHTB	430840	A.9
FASHTD	430843	A.9
FASHTF	430846	A.9
FASHTH	435118	A.9
FASHTJ	430849	A.9
FASHTN	430852	A.9
FASHTU	430855	A.9
FAUVDN	430858	A.9
FAUVR8	436472	A.9
FAUVRB	431960	A.9
FAUVRD	430861	A.9
FAUVRF	430864	A.9
FAUVRH	435120	A.9
FAUVRJ	430867	A.9
FAUVRN	430870	A.9
FAUVRU	430873	A.9
FAWE	432619	A.20
FAZ	431406	A.22
FB...		
FBAD3	433443	A.43
FBAD4	433446	A.43
FBAE3	433449	A.43
FBAE4	433452	A.43
FBB3E	433455	A.43
FBB3S	433458	A.43
FBB4E	433461	A.43
FBB4S	433464	A.43
FBCI3	433377	A.43
FBCI4	433444	A.43
FBF6	883970	A.10
FBTF3L12	433456	A.43
FBTF4L12	433497	A.43
FBTS10L12	433474	A.43
FBTS1L12	433468	A.43
FD...		
FD1BPE	430876	A.9
FD1BRE	430877	A.9
FD1PF	430878	A.11
FD1PR	430879	A.11
FDBAM11	430880	A.9
FDBEA3	430883	A.10
FDBEA4	430884	A.10
FDBEH3	430885	A.10
FDBEH4	430886	A.10
FDBES3	430887	A.10
FDBES4	430888	A.10
FDBRC3	430889	A.10
FDBRC4	430890	A.10
FDBRCL2	433357	A.10
FDBRCS2	433358	A.10
FDBSS3	430891	A.10
FDBSS4	430892	A.10
FDC35TE016ED	433907	A.5
FDC35TE020ED	433911	A.5
FDC35TE025ED	433914	A.5
FDC35TE032ED	433918	A.5
FDC35TE040ED	436117	A.5
FDC35TE050ED	436118	A.5
FDC35TE063ED	436133	A.5
FDC35TE080GD	436143	A.5
FDC35TE100GD	436144	A.5
FDC35TE125GD	433924	A.5
FDC35TE160GD	433925	A.5
FDC35TF016EF	433532	A.5
FDC35TF020EF	433553	A.5
FDC35TF025EF	433864	A.5
FDC35TF032EF	433867	A.5
FDC35TF040EF	433870	A.5
FDC35TF050EF	433873	A.5
FDC35TF063EF	433876	A.5
FDC35TF080GF	433879	A.5
FDC35TF100GF	433882	A.5
FDC35TF125GF	433885	A.5
FDC35TF160GF	433899	A.5
FDC45TE016ED	433948	A.5
FDC45TE020ED	433949	A.5
FDC45TE025ED	433950	A.5
FDC45TE032ED	433951	A.5
FDC45TE040ED	433952	A.5
FDC45TE050ED	433953	A.5
FDC45TE063ED	433954	A.5
FDC45TE080GD	436145	A.5
FDC45TE100GD	436146	A.5
FDC45TE125GD	436147	A.5
FDC45TE160GD	436148	A.5
FDC45TF016EF	433926	A.5
FDC45TF020EF	433928	A.5
FDC45TF025EF	433930	A.5
FDC45TF032EF	433932	A.5
FDC45TF040EF	433934	A.5
FDC45TF050EF	433936	A.5
FDC45TF063EF	433938	A.5
FDC45TF080GF	433940	A.5
FDC45TF100GF	433942	A.5
FDC45TF125GF	433944	A.5
FDC45TF160GF	433946	A.5
FDDDF3	430893	A.10
FDDDF4	430896	A.10
FDDFF3	430899	A.10
FDDFF4	430902	A.10
FDDFQ3	433489	A.10
FDDFQ4	433492	A.10
FDDMP3	430905	A.10
FDDMP4	430908	A.10
FDE36T5C016EF	436582	A.8
FDE36T5C020EF	436583	A.8
FDE36T5C025EF	436584	A.8
FDE36T5C032EF	436588	A.8
FDE36T5C040EF	436589	A.8
FDE36T5C050EF	436591	A.8
FDE36T5C063EF	436593	A.8
FDE36T5C080GF	436594	A.8
FDE36T5C100GF	436595	A.8
FDE36T5C125GF	436596	A.8
FDE36T5C160GF	436600	A.8
FDE36TC016EF	430001	A.5
FDE36TC020EF	430002	A.5
FDE36TC025EF	430003	A.5
FDE36TC032EF	430004	A.5
FDE36TC040EF	430005	A.5
FDE36TC050EF	430006	A.5
FDE36TC063EF	430007	A.5
FDE36TC080GF	430276	A.5
FDE36TC100GF	430279	A.5
FDE36TC125GF	430282	A.5
FDE36TC160GF	433566	A.5
FDE36TE016ED	433649	A.5
FDE36TE020ED	433651	A.5
FDE36TE025ED	433653	A.5
FDE36TE032ED	433655	A.5
FDE36TE040ED	433657	A.5
FDE36TE050ED	433659	A.5
FDE36TE063ED	433661	A.5
FDE36TE080GD	433663	A.5
FDE36TE100GD	433665	A.5
FDE36TE125GD	433667	A.5
FDE36TE160GD	433669	A.5
FDE36TF016EF	435127	A.5
FDE36TF020EF	435129	A.5
FDE36TF025EF	435130	A.5
FDE36TF032EF	435132	A.5
FDE36TF040EF	435135	A.5
FDE36TF050EF	435138	A.5
FDE36TF063EF	435145	A.5
FDE36TF080GF	435147	A.5
FDE36TF100GF	435193	A.5
FDE36TF125GF	435195	A.5
FDE36TF160GF	435205	A.5
FDE46TC016EF	430008	A.5
FDE46TC020EF	430009	A.5
FDE46TC025EF	430010	A.5
FDE46TC032EF	430011	A.5
FDE46TC040EF	430012	A.5
FDE46TC050EF	430013	A.5
FDE46TC063EF	430014	A.5
FDE46TC080GF	430299	A.5
FDE46TC100GF	430302	A.5
FDE46TC125GF	430305	A.5
FDE46TC160GF	433569	A.5
FDE46TE016ED	433697	A.5
FDE46TE020ED	433699	A.5
FDE46TE025ED	433701	A.5
FDE46TE032ED	433703	A.5
FDE46TE040ED	433705	A.5
FDE46TE050ED	433707	A.5
FDE46TE063ED	433709	A.5
FDE46TE080GD	433711	A.5
FDE46TE100GD	433713	A.5
FDE46TE125GD	433715	A.5
FDE46TE160GD	433717	A.5
FDE46TF016EF	435207	A.5
FDE46TF020EF	435229	A.5
FDE46TF025EF	435231	A.5
FDE46TF032EF	435238	A.5
FDE46TF040EF	435240	A.5
FDE46TF050EF	435242	A.5
FDE46TF063EF	435244	A.5
FDE46TF080GF	435246	A.5
FDE46TF100GF	435248	A.5
FDE46TF125GF	435256	A.5
FDE46TF160GF	435258	A.5
FDEMF8	430920	A.9
FDEMFD	430926	A.9
FDEMFF	430929	A.9
FDEMFH	430932	A.9
FDEMFJ	430935	A.9
FDEMFN	430938	A.9
FDFE	432010	A.11
FDFF3	430941	A.11
FDFF4	430942	A.11
FDFH	430829	A.11
FDH13TF016EF	433246	A.6
FDH13TF020EF	433255	A.6
FDH13TF025EF	433262	A.6
FDH13TF032EF	433268	A.6
FDH13TF040EF	433274	A.6
FDH13TF050EF	433280	A.6
FDH13TF063EF	433286	A.6
FDH13TF080GF	433292	A.6
FDH13TF100GF	433298	A.6
FDH13TF125GF	433304	A.6
FDH13TF160GF	433310	A.6
FDH36MC003ED	436396	A.7
FDH36MC007ED	430015	A.7
FDH36MC012ED	430016	A.7
FDH36MC020ED	430017	A.7
FDH36MC030ED	430018	A.7
FDH36MC050ED	430019	A.7
FDH36MC080GD	430318	A.7
FDH36MC100GD	430321	A.7
FDH36T5D016ED	430850	A.8
FDH36T5D020ED	430851	A.8
FDH36T5D025ED	430853	A.8
FDH36T5D032ED	430854	A.8
FDH36T5D040ED	430857	A.8
FDH36T5D050ED	430862	A.8
FDH36T5D063ED	430866	A.8
FDH36T5D080GD	430871	A.8
FDH36T5D100GD	430874	A.8
FDH36T5D125GD	430875	A.8
FDH36T5D160GD	430881	A.8
FDH36TD016ED	430020	A.6
FDH36TD020ED	430021	A.6
FDH36TD025ED	430022	A.6
FDH36TD032ED	430023	A.6
FDH36TD040ED	430024	A.6
FDH36TD050ED	430025	A.6
FDH36TD063ED	430026	A.6
FDH36TD080GD	430338	A.6
FDH36TD100GD	430341	A.6
FDH36TD125GD	430344	A.6
FDH36TD160GD	435821	A.6
FDH36TG025ED	430027	A.7
FDH36TG032ED	430028	A.7
FDH36TG040ED	430029	A.7
FDH36TG050ED	430030	A.7
FDH36TG063ED	430031	A.7
FDH36TG080GD	430357	A.7
FDH36TG100GD	430360	A.7
FDH36TG125GD	430363	A.7
FDH36TG160GD	435824	A.7
FDH436MC003ED	436398	A.7
FDH436MC007ED	430032	A.7
FDH436MC012ED	430033	A.7
FDH436MC020ED	430034	A.7
FDH436MC030ED	430035	A.7
FDH436MC050ED	430036	A.7
FDH436MC080GD	430376	A.7
FDH436MC100GD	430379	A.7
FDH436TD016ED	430037	A.6
FDH436TD020ED	430038	A.6
FDH436TD025ED	430039	A.6
FDH436TD032ED	430040	A.6
FDH436TD040ED	430041	A.6
FDH436TD050ED	430042	A.6
FDH436TD063ED	430043	A.6
FDH436TD080GD	430396	A.6
FDH436TD100GD	430399	A.6
FDH436TD125GD	430402	A.6
FDH436TD160GD	435827	A.6
FDH436TG025ED	430044	A.7
FDH436TG032ED	430045	A.7
FDH436TG040ED	430046	A.7
FDH436TG050ED	430047	A.7
FDH436TG063ED	430048	A.7
FDH436TG080GD	430415	A.7
FDH436TG100GD	430418	A.7
FDH436TG125GD	430421	A.7
FDH436TG160GD	435830	A.7
FDH456TD063ED	430049	A.6
FDH456TD080GD	430426	A.6
FDH456TD100GD	430429	A.6
FDH456TD125GD	430432	A.6
FDH456TD160GD	435833	A.6
FDH456TG063ED	430050	A.7
FDH456TG080GD	430437	A.7
FDH456TG100GD	430440	A.7
FDH456TG125GD	430443	A.7
FDH456TG160GD	435836	A.7
FDH46TD016ED	430051	A.6
FDH46TD020ED	430052	A.6
FDH46TD025ED	430053	A.6
FDH46TD032ED	430054	A.6
FDH46TD040ED	430055	A.6
FDH46TD050ED	430056	A.6
FDH46TD063ED	430057	A.6
FDH46TD080GD	430460	A.6
FDH46TD100GD	430463	A.6
FDH46TD125GD	430466	A.6
FDH46TD160GD	435839	A.6
FDH46TG025ED	430058	A.7
FDH46TG032ED	430059	A.7
FDH46TG040ED	430060	A.7
FDH46TG050ED	430061	A.7
FDH46TG063ED	430062	A.7
FDH46TG080GD	430479	A.7
FDH46TG100GD	430482	A.7
FDH46TG125GD	430485	A.7
FDH46TG160GD	435842	A.7
FDJB	430945	A.10
FDJK	430069	A.10
FDJL3	430951	A.10
FDJL4	430954	A.10
FDJP	430957	A.10
FDJS3	430960	A.10
FDJS4	430963	A.10
FDKD3	430966	A.11
FDKD4	430967	A.11
FDKE	617947	A.11
FDKM1	436720	A.11
FDL36MC020ED	430065	A.7
FDL36MC030ED	430066	A.7
FDL36MC050ED	430067	A.7
FDL36MC080GD	430498	A.7
FDL36MC100GD	430501	A.7
FDL36TD025ED	430070	A.6
FDL36TD032ED	430071	A.6
FDL36TD040ED	430072	A.6
FDL36TD050ED	430073	A.6
FDL36TD063ED	430074	A.6
FDL36TD080GD	430518	A.6
FDL36TD100GD	430521	A.6
FDL36TD125GD	430524	A.6
FDL36TD160GD	435845	A.6
FDL436MC020ED	430077	A.7
FDL436MC030ED	430078	A.7
FDL436MC050ED	430079	A.7
FDL436MC080GD	430537	A.7
FDL436MC100GD	430540	A.7
FDL436TD025ED	430082	A.6
FDL436TD032ED	430083	A.6
FDL436TD040ED	430084	A.6
FDL436TD050ED	430085	A.6
FDL436TD063ED	430086	A.6
FDL436TD080GD	430557	A.6
FDL436TD100GD	430560	A.6
FDL436TD125GD	430563	A.6
FDL436TD160GD	435848	A.6
FDL456TD063ED	430087	A.6
FDL456TD080GD	430568	A.6
FDL456TD100GD	430571	A.6
FDL456TD125GD	430574	A.6
FDL456TD160GD	435851	A.6
FDL46TD025ED	430090	A.6
FDL46TD032ED	430091	A.6
FDL46TD040ED	430092	A.6
FDL46TD050ED	430093	A.6
FDL46TD063ED	430094	A.6
FDL46TD080GD	430591	A.6
FDL46TD100GD	430594	A.6
FDL46TD125GD	430597	A.6
FDL46TD160GD	435854	A.6
FDN13TF016EF	433316	A.6
FDN13TF020EF	433322	A.6
FDN13TF025EF	433328	A.6
FDN13TF032EF	433334	A.6
FDN13TF040EF	433340	A.6
FDN13TF050EF	433346	A.6
FDN13TF063EF	433352	A.6
FDN13TF080GF	433519	A.6
FDN13TF100GF	433522	A.6
FDN13TF125GF	433525	A.6
FDN13TF160GF	433527	A.6
FDN36MC003ED	436409	A.7
FDN36MC007ED	430095	A.7
FDN36MC012ED	430096	A.7
FDN36MC020ED	430097	A.7
FDN36MC030ED	430098	A.7
FDN36MC050ED	430099	A.7
FDN36MC080GD	430610	A.7
FDN36MC100GD	430613	A.7
FDN36T5D016ED	430833	A.8
FDN36T5D020ED	430835	A.8
FDN36T5D025ED	430836	A.8
FDN36T5D032ED	430838	A.8
FDN36T5D040ED	430839	A.8
FDN36T5D050ED	430841	A.8
FDN36T5D063ED	430842	A.8
FDN36T5D080GD	430844	A.8
FDN36T5D100GD	430845	A.8
FDN36T5D125GD	430847	A.8
FDN36T5D160GD	430848	A.8
FDN36TD016ED	430100	A.6
FDN36TD020ED	430101	A.6
FDN36TD025ED	430102	A.6
FDN36TD032ED	430103	A.6
FDN36TD040ED	430104	A.6
FDN36TD050ED	430105	A.6
FDN36TD063ED	430106	A.6
FDN36TD080GD	430630	A.6
FDN36TD100GD	430633	A.6
FDN36TD125GD	430636	A.6
FDN36TD160GD	433572	A.6
FDN36TG025ED	430107	A.7
FDN36TG032ED	430108	A.7
FDN36TG040ED	430109	A.7
FDN36TG050ED	430110	A.7
FDN36TG063ED	430111	A.7
FDN36TG080GD	430649	A.7
FDN36TG100GD	430652	A.7
FDN36TG125GD	430655	A.7
FDN36TG160GD	433575	A.7
FDN436MC003ED	436411	A.7
FDN436MC007ED	430112	A.7
FDN436MC012ED	430113	A.7
FDN436MC020ED	430114	A.7
FDN436MC030ED	430115	A.7
FDN436MC050ED	430116	A.7
FDN436MC080GD	430668	A.7
FDN436MC100GD	430671	A.7
FDN436TD016ED	430117	A.6
FDN436TD020ED	430118	A.6
FDN436TD025ED	430119	A.6
FDN436TD032ED	430120	A.6
FDN436TD040ED	430121	A.6
FDN436TD050ED	430122	A.6
FDN436TD063ED	430123	A.6
FDN436TD080GD	430688	A.6
FDN436TD100GD	430691	A.6

Cat. no.	Ref. no.	Page
FDN436TD125GD	430694	A.6
FDN436TD160GD	433578	A.6
FDN436TG025ED	430124	A.7
FDN436TG032ED	430125	A.7
FDN436TG040ED	430126	A.7
FDN436TG050ED	430127	A.7
FDN436TG063ED	430128	A.7
FDN436TG080GD	430707	A.7
FDN436TG100GD	430710	A.7
FDN436TG125GD	430713	A.7
FDN436TG160GD	433581	A.7
FDN456TD063ED	430129	A.6
FDN456TD080GD	430718	A.6
FDN456TD100GD	430721	A.6
FDN456TD125GD	430724	A.6
FDN456TD160GD	433584	A.6
FDN456TG063ED	430130	A.7
FDN456TG080GD	430729	A.7
FDN456TG100GD	430732	A.7
FDN456TG125GD	430735	A.7
FDN456TG160GD	433587	A.7
FDN46TD016ED	430131	A.6
FDN46TD020ED	430132	A.6
FDN46TD025ED	430133	A.6
FDN46TD032ED	430134	A.6
FDN46TD040ED	430135	A.6
FDN46TD050ED	430136	A.6
FDN46TD063ED	430137	A.6
FDN46TD080GD	430752	A.6
FDN46TD100GD	430755	A.6
FDN46TD125GD	430758	A.6
FDN46TD160GD	433590	A.6
FDN46TG025ED	430138	A.7
FDN46TG032ED	430139	A.7
FDN46TG040ED	430140	A.7
FDN46TG050ED	430141	A.7
FDN46TG063ED	430142	A.7
FDN46TG080GD	430771	A.7
FDN46TG100GD	430774	A.7
FDN46TG125GD	430777	A.7
FDN46TG160GD	433593	A.7
FDN66TD016ED	430143	A.6
FDN66TD020ED	430144	A.6
FDN66TD025ED	430145	A.6
FDN66TD032ED	430146	A.6
FDN66TD040ED	430147	A.6
FDN66TD050ED	430148	A.6
FDN66TD063ED	430149	A.6
FDN66TD080GD	430794	A.6
FDN66TD100GD	430797	A.6
FDN66TD125GD	430800	A.6
FDN66TD160GD	433599	A.6
FDNR4	430971	A.9
FDNRC/	436474	A.9
FDNRCV/	436475	A.9
FDNRD/5	436476	A.9
FDNRDV/5	436477	A.9
FDNRE	430986	A.9
FDNRF/5	436478	A.9
FDNRFV/	436479	A.9
FDNRV/5	436487	A.9
FDNRVV/	436488	A.9
FDNRZ/5	436489	A.9
FDNRZV/5	436490	A.9
FDQDB3H/	431076	A.9
FDQDB3M/	431078	A.9
FDQDB4H/6	431080	A.9
FDQDB4M/6	431084	A.9
FDQDI3M/	431086	A.9
FDQDI4M/6	431088	A.9
FDQDS3H/	431090	A.9
FDQDS3M/	431095	A.9
FDQDS4H/6	431101	A.9
FDQDS4M/6	431103	A.9
FDS36T5D016ED	430546	A.8
FDS36T5D020ED	430577	A.8
FDS36T5D025ED	430578	A.8
FDS36T5D032ED	430579	A.8
FDS36T5D040ED	430580	A.8
FDS36T5D050ED	430814	A.8
FDS36T5D063ED	430816	A.8
FDS36T5D080GD	430817	A.8
FDS36T5D100GD	430819	A.8
FDS36T5D125GD	430820	A.8
FDS36T5D160GD	430822	A.8
FDS36TD016ED	430161	A.6
FDS36TD020ED	430163	A.6
FDS36TD025ED	430165	A.6
FDS36TD032ED	430167	A.6
FDS36TD040ED	430169	A.6
FDS36TD050ED	430178	A.6
FDS36TD063ED	432952	A.6
FDS36TD080GD	432955	A.6
FDS36TD100GD	432958	A.6
FDS36TD125GD	432961	A.6
FDS36TD160GD	433602	A.6
FDS46TD016ED	430224	A.6
FDS46TD020ED	430226	A.6
FDS46TD025ED	430228	A.6
FDS46TD032ED	430230	A.6
FDS46TD040ED	430232	A.6
FDS46TD050ED	430241	A.6
FDS46TD063ED	432964	A.6
FDS46TD080GD	432967	A.6
FDS46TD100GD	432970	A.6
FDS46TD125GD	432973	A.6
FDS46TD160GD	433604	A.6
FDTCA1316	433400	A.10
FDTCA1416	433401	A.10
FDUA3	431025	A.11
FDUA4	431026	A.11
FDUF3	430830	A.10
FDUF4	430832	A.10
FDUT	433539	A.11
FDY306D063ED	430150	A.7
FDY306D160GD	430805	A.7
FDY406D063ED	430151	A.7
FDY406D160GD	430810	A.7
FE...		
FE1BPE	432011	A.19
FE1BRE	432012	A.19
FE1I2	437001	A.45
FE1PF	432017	A.22
FEBAT01	430969	A.19
FEBAT10	430970	A.19
FEBE43	432018	A.21
FEBE44	432019	A.21
FEBE93	432020	A.21
FEBE94	432021	A.21
FEBEA3	432022	A.21
FEBEA4	432023	A.21
FEBEH3	432024	A.21
FEBEH4	432025	A.21
FEBES3	432026	A.21
FEBES4	432027	A.21
FEBRC3	432028	A.21
FEBRC4	432029	A.21
FEBRCS3	432190	A.21
FEBRCS4	432191	A.21
FEBSS3	432032	A.21
FEBSS4	432033	A.21
FEDDF3	432034	A.20
FEDDF4	432037	A.20
FEDFF3	432040	A.20
FEDFF4	432043	A.20
FEDFQ3	430987	A.20
FEDFQ4	431842	A.20
FEDMP3	432046	A.20
FEDMP4	432049	A.20
FEEMF8	435812	A.19
FEEMFD	432052	A.19
FEEMFF	432055	A.19
FEEMFH	432058	A.19
FEEMFJ	432061	A.19
FEEMFN	432064	A.19
FEFE	430943	A.22
FEFF3	432067	A.22
FEFF4	432068	A.22
FEFT	432071	A.22
FEH306F160JF	431126	A.48
FEH306F250KF	431129	A.49
FEH36AA025JBF	435857	A.14
FEH36AA063JEF	435860	A.14
FEH36AA125JGF	431112	A.14
FEH36AA125KGF	431116	A.17
FEH36AA160JJF	431117	A.14
FEH36AA160KJF	431120	A.17
FEH36AA250KKF	431123	A.17
FEH36MC003JF	436361	A.14
FEH36MC007JF	434742	A.14
FEH36MC012JF	434745	A.14
FEH36MC020JF	434748	A.14
FEH36MC030JF	434751	A.14
FEH36MC050JF	434754	A.14
FEH36MC080JF	435893	A.14
FEH36MC100JF	434757	A.14
FEH36MC125JF	436327	A.14
FEH36MC160JF	434763	A.14
FEH36MC160KF	434766	A.16
FEH36MC200KF	436754	A.16
FEH36MC250KF	434769	A.16
FEH36SA125JGF	431138	A.15
FEH36SA160JJF	431141	A.15
FEH36SA160KJF	431144	A.17
FEH36SA250KKF	431147	A.17
FEH36T5D125KF	431235	A.18
FEH36T5D160KF	431244	A.18
FEH36T5D200KF	431245	A.18
FEH36T5D225KF	431247	A.18
FEH36TA025JF	434772	A.13
FEH36TA032JF	434775	A.13
FEH36TA040JF	434778	A.13
FEH36TA050JF	434781	A.13
FEH36TA063JF	434784	A.13
FEH36TA080JF	431165	A.13
FEH36TA100JF	431171	A.13
FEH36TA125JF	431177	A.13
FEH36TA160JF	431183	A.13
FEH36TD100JF	431007	A.13
FEH36TD125JF	431021	A.13
FEH36TD125KF	431393	A.16
FEH36TD160JF	431965	A.13
FEH36TD160KF	431980	A.16
FEH36TD200KF	432076	A.16
FEH36TD250KF	432096	A.16
FEH36TG100JF	434808	A.13
FEH36TG125JF	434811	A.13
FEH36TG160JF	434817	A.13
FEH36TG160KF	434820	A.16
FEH36TG200KF	434823	A.16
FEH36TG250KF	434826	A.16
FEH406F160JF	431213	A.48
FEH406F250KF	431216	A.49
FEH436MC050JF	434829	A.14
FEH436MC100JF	434832	A.14
FEH436MC125JF	436329	A.14
FEH436MC160JF	434838	A.14
FEH436MC160KF	434841	A.16
FEH436MC200KF	436755	A.16
FEH436MC250KF	434844	A.16
FEH436SA125JGF	431225	A.15
FEH436SA160JJF	431228	A.15
FEH436SA160KJF	431231	A.17
FEH436SA250KKF	431234	A.17
FEH436TA025JF	434847	A.13
FEH436TA032JF	434850	A.13
FEH436TA040JF	434853	A.13
FEH436TA050JF	434856	A.13
FEH436TA063JF	434859	A.13
FEH436TA080JF	431252	A.13
FEH436TA100JF	431258	A.13
FEH436TA125JF	431264	A.13
FEH436TA160JF	431270	A.13
FEH436TD100JF	432198	A.13
FEH436TD125JF	432205	A.13
FEH436TD125KF	432209	A.16
FEH436TD160JF	432214	A.13
FEH436TD160KF	432218	A.16
FEH436TD200KF	432223	A.16
FEH436TD250KF	432227	A.16
FEH436TG100JF	435902	A.13
FEH436TG125JF	435903	A.13
FEH436TG160JF	435904	A.13
FEH436TG160KF	435905	A.16
FEH436TG200KF	435906	A.16
FEH436TG250KF	435907	A.16
FEH456SA125JGF	431285	A.15
FEH456SA160JJF	431288	A.15
FEH456SA160KJF	431291	A.17
FEH456SA250KKF	431294	A.17
FEH456TA063JF	434871	A.13
FEH456TA080JF	431300	A.13
FEH456TA100JF	431306	A.13
FEH456TA125JF	431312	A.13
FEH456TA160JF	431318	A.13
FEH456TD100JF	432242	A.13
FEH456TD125JF	432250	A.13
FEH456TD125KF	432254	A.16
FEH456TD160JF	432259	A.13
FEH456TD160KF	432263	A.16
FEH456TD200KF	432266	A.16
FEH456TD250KF	432269	A.16
FEH456TG100JF	436026	A.13
FEH456TG125JF	436027	A.13
FEH456TG160JF	436028	A.13
FEH456TG160KF	435908	A.16
FEH456TG200KF	435909	A.16
FEH456TG250KF	435910	A.16
FEH46AA025JBF	435863	A.14
FEH46AA063JEF	435866	A.14
FEH46AA125JGF	431201	A.14
FEH46AA125KGF	431824	A.17
FEH46AA160JJF	431204	A.14
FEH46AA160KJF	431207	A.17
FEH46AA250KKF	431210	A.17
FEH46SA125JGF	431336	A.15
FEH46SA160JJF	431339	A.15
FEH46SA160KJF	431342	A.17
FEH46SA250KKF	431345	A.17
FEH46TA025JF	434883	A.13
FEH46TA032JF	434886	A.13
FEH46TA040JF	434889	A.13
FEH46TA050JF	434892	A.13
FEH46TA063JF	434895	A.13
FEH46TA080JF	431363	A.13
FEH46TA100JF	431369	A.13
FEH46TA125JF	431375	A.13
FEH46TA160JF	431381	A.13
FEH46TD100JF	432287	A.13
FEH46TD125JF	432296	A.13
FEH46TD125KF	432300	A.16
FEH46TD160JF	432303	A.13
FEH46TD160KF	432307	A.16
FEH46TD200KF	432311	A.16
FEH46TD250KF	432316	A.16
FEH46TG100JF	434919	A.13
FEH46TG125JF	434922	A.13
FEH46TG160JF	434928	A.13
FEH46TG160KF	434931	A.16
FEH46TG200KF	434934	A.16
FEH46TG250KF	434937	A.16
FEJB	432073	A.22
FEJL3	432079	A.22
FEJL4	432082	A.22
FEJN3	436467	A.20
FEJN4	436467	A.20
FEJP	432085	A.22
FEJS3	432088	A.22
FEJS4	432091	A.22
FEL306F160JF	431419	A.48
FEL306F250KF	431422	A.49
FEL36AA025JBF	435869	A.14
FEL36AA063JEF	435872	A.14
FEL36AA125JGF	431405	A.14
FEL36AA125KGF	431836	A.17
FEL36AA160JJF	431410	A.14
FEL36AA160KJF	431413	A.17
FEL36AA250KKF	431416	A.17
FEL36MC003JF	436363	A.14
FEL36MC007JF	434940	A.14
FEL36MC012JF	434943	A.14
FEL36MC020JF	434946	A.14
FEL36MC030JF	434949	A.14
FEL36MC050JF	434952	A.14
FEL36MC080JF	435896	A.14
FEL36MC100JF	434955	A.14
FEL36MC125JF	436331	A.14
FEL36MC160JF	434961	A.14
FEL36MC160KF	434964	A.16
FEL36MC200KF	436756	A.16
FEL36MC250KF	434967	A.16
FEL36SA125JGF	431431	A.15
FEL36SA160JJF	431434	A.15
FEL36SA160KJF	431437	A.17
FEL36SA250KKF	431440	A.17
FEL36TA025JF	434970	A.13
FEL36TA032JF	434973	A.13
FEL36TA040JF	434976	A.13
FEL36TA050JF	434979	A.13
FEL36TA063JF	434982	A.13
FEL36TA080JF	431458	A.13
FEL36TA100JF	431464	A.13
FEL36TA125JF	431470	A.13
FEL36TA160JF	431476	A.13
FEL36TD100JF	432332	A.13
FEL36TD125JF	432341	A.13
FEL36TD125KF	432344	A.16
FEL36TD160JF	432349	A.13
FEL36TD160KF	432353	A.16
FEL36TD200KF	432357	A.16
FEL36TD250KF	432361	A.16
FEL36TG100JF	435923	A.13
FEL36TG125JF	435926	A.13
FEL36TG160JF	435932	A.13
FEL36TG160KF	435935	A.16
FEL36TG200KF	435938	A.16
FEL36TG250KF	435941	A.16
FEL406F160JF	431506	A.48
FEL406F250KF	431509	A.49
FEL436MC050JF	434994	A.14
FEL436MC100JF	434997	A.14
FEL436MC125JF	436333	A.14
FEL436MC160JF	435004	A.14
FEL436MC160KF	435007	A.16
FEL436MC200KF	436763	A.16
FEL436MC250KF	435010	A.16
FEL436SA125JGF	431518	A.15
FEL436SA160JJF	431521	A.15
FEL436SA160KJF	431524	A.17
FEL436SA250KKF	431527	A.17
FEL436TA025JF	435013	A.13
FEL436TA032JF	435016	A.13
FEL436TA040JF	435019	A.13
FEL436TA050JF	435022	A.13
FEL436TA063JF	435025	A.13
FEL436TA080JF	431545	A.13
FEL436TA100JF	431551	A.13
FEL436TA125JF	431557	A.13
FEL436TA160JF	431563	A.13
FEL436TD100JF	432374	A.13
FEL436TD125JF	432573	A.13
FEL436TD125KF	432576	A.16
FEL436TD160JF	432585	A.13
FEL436TD160KF	432588	A.16
FEL436TD200KF	432618	A.16
FEL436TD250KF	432621	A.16
FEL436TG100JF	435944	A.13
FEL436TG125JF	435947	A.13
FEL436TG160JF	435950	A.13
FEL436TG160KF	435953	A.16
FEL436TG200KF	435956	A.16
FEL436TG250KF	435959	A.16
FEL456SA125JGF	431578	A.15
FEL456SA160JJF	431581	A.15
FEL456SA160KJF	431584	A.17
FEL456SA250KKF	431587	A.17
FEL456TA063JF	435037	A.13
FEL456TA080JF	431593	A.13
FEL456TA100JF	431599	A.13
FEL456TA125JF	431605	A.13
FEL456TA160JF	431611	A.13
FEL456TD100JF	432699	A.13
FEL456TD125JF	432747	A.13
FEL456TD125KF	432780	A.16
FEL456TD160JF	432834	A.13
FEL456TD160KF	432843	A.16
FEL456TD200KF	432868	A.16
FEL456TD250KF	432871	A.16
FEL456TG100JF	435962	A.13
FEL456TG125JF	435965	A.13
FEL456TG160JF	435968	A.13
FEL456TG160KF	435971	A.16
FEL456TG200KF	435974	A.16
FEL456TG250KF	435977	A.16
FEL46AA025JBF	435875	A.14
FEL46AA063JEF	435878	A.14
FEL46AA125JGF	431494	A.14
FEL46AA125KGF	431890	A.17
FEL46AA160JJF	431497	A.14
FEL46AA160KJF	431500	A.17
FEL46AA250KKF	431503	A.17
FEL46SA125JGF	431629	A.15
FEL46SA125KGF	431632	A.15
FEL46SA160JJF	431635	A.15
FEL46SA160KJF	431638	A.17
FEL46SA250KKF	431641	A.17
FEL46TA025JF	435049	A.13
FEL46TA032JF	435052	A.13
FEL46TA040JF	435055	A.13
FEL46TA050JF	435058	A.13
FEL46TA063JF	435061	A.13
FEL46TA080JF	431656	A.13
FEL46TA100JF	431662	A.13
FEL46TA125JF	431668	A.13
FEL46TA160JF	431674	A.13
FEL46TD100JF	432907	A.13
FEL46TD125JF	432921	A.13
FEL46TD125KF	432924	A.16
FEL46TD160JF	432927	A.13
FEL46TD160KF	432930	A.16
FEL46TD200KF	432933	A.16
FEL46TD250KF	432936	A.16
FEL46TG100JF	435992	A.13
FEL46TG125JF	435995	A.13
FEL46TG160JF	436002	A.13
FEL46TG160KF	436005	A.16
FEL46TG200KF	436008	A.16
FEL46TG250KF	436011	A.16
FEN306F160JF	431712	A.48
FEN306F250KF	431715	A.49
FEN36AA025JBF	435881	A.14
FEN36AA063JEF	435884	A.14
FEN36AA125JGF	431698	A.14
FEN36AA125KGF	431920	A.17
FEN36AA160JJF	431703	A.14
FEN36AA160KJF	431706	A.17
FEN36AA250KKF	431709	A.17
FEN36MC003JF	436365	A.14
FEN36MC007JF	435073	A.14
FEN36MC012JF	435076	A.14
FEN36MC020JF	435079	A.14
FEN36MC030JF	435082	A.14
FEN36MC050JF	435085	A.14
FEN36MC080JF	435899	A.14
FEN36MC100JF	435088	A.14
FEN36MC125JF	436335	A.14

Cat. no.	Ref. no.	Page
FEN36MC160JF	435094	A.14
FEN36MC160KF	435097	A.16
FEN36MC200KF	436764	A.16
FEN36MC250KF	435100	A.16
FEN36SA125JGF	431724	A.15
FEN36SA160JJF	431727	A.15
FEN36SA160KJF	431730	A.17
FEN36SA250KKF	431733	A.17
FEN36T5D100KF	431223	A.18
FEN36T5D125KF	431224	A.18
FEN36T5D160KF	431226	A.18
FEN36T5D200KF	431229	A.18
FEN36T5D225KF	431232	A.18
FEN36TA025JF	435103	A.13
FEN36TA032JF	435106	A.13
FEN36TA040JF	435109	A.13
FEN36TA050JF	435112	A.13
FEN36TA063JF	435115	A.13
FEN36TA080JF	431751	A.13
FEN36TA100JF	431757	A.13
FEN36TA125JF	431763	A.13
FEN36TA160JF	431769	A.13
FEN36TD100JF	432945	A.13
FEN36TD125JF	432953	A.13
FEN36TD125KF	432962	A.16
FEN36TD160JF	432971	A.13
FEN36TD160KF	432976	A.16
FEN36TD200KF	432979	A.16
FEN36TD250KF	432982	A.16
FEN36TG100JF	435139	A.13
FEN36TG125JF	435142	A.13
FEN36TG160JF	435148	A.13
FEN36TG160KF	435151	A.16
FEN36TG200KF	435154	A.16
FEN36TG250KF	435157	A.16
FEN406F160JF	431799	A.48
FEN406F250KF	431802	A.49
FEN436MC050JF	435160	A.14
FEN436MC100JF	435163	A.14
FEN436MC125JF	436356	A.14
FEN436MC160JF	435169	A.14
FEN436MC160KF	435172	A.16
FEN436MC200KF	436765	A.16
FEN436MC250KF	435175	A.16
FEN436SA125JGF	431811	A.15
FEN436SA160JJF	431814	A.15
FEN436SA160KJF	431817	A.17
FEN436SA250KKF	431820	A.17
FEN436TA025JF	435178	A.13
FEN436TA032JF	435181	A.13
FEN436TA040JF	435184	A.13
FEN436TA050JF	435187	A.13
FEN436TA063JF	435190	A.13
FEN436TA080JF	431838	A.13
FEN436TA100JF	431844	A.13
FEN436TA125JF	431850	A.13
FEN436TA160JF	431856	A.13
FEN436TD100JF	432994	A.13
FEN436TD125JF	433001	A.13
FEN436TD125KF	433004	A.16
FEN436TD160JF	433007	A.13
FEN436TD160KF	433010	A.16
FEN436TD200KF	433013	A.16
FEN436TD250KF	433016	A.16
FEN436TG100JF	436014	A.13
FEN436TG125JF	436015	A.13
FEN436TG160JF	436016	A.13
FEN436TG160KF	436017	A.16
FEN436TG200KF	436018	A.16
FEN436TG250KF	436019	A.16
FEN456SA125JGF	431871	A.15
FEN456SA160JJF	431874	A.15
FEN456SA160KJF	431877	A.17
FEN456SA250KKF	431880	A.17
FEN456TA063JF	435202	A.13
FEN456TA080JF	431886	A.13
FEN456TA100JF	431892	A.13
FEN456TA125JF	431898	A.13
FEN456TA160JF	431904	A.13
FEN456TD100JF	433028	A.13
FEN456TD125JF	433034	A.13
FEN456TD125KF	433037	A.16
FEN456TD160JF	433040	A.13
FEN456TD160KF	433043	A.16
FEN456TD200KF	433046	A.16
FEN456TD250KF	433049	A.16
FEN456TG100JF	436020	A.13
FEN456TG125JF	436021	A.13
FEN456TG160JF	436022	A.13
FEN456TG160KF	436023	A.16
FEN456TG200KF	436024	A.16
FEN456TG250KF	436025	A.16
FEN46AA025JBF	435887	A.14
FEN46AA063JEF	435890	A.14
FEN46AA125JGF	431787	A.14
FEN46AA125KGF	431938	A.17
FEN46AA160JJF	431790	A.14
FEN46AA160KJF	431793	A.17
FEN46AA250KKF	431796	A.17
FEN46SA125JGF	431922	A.15
FEN46SA160JJF	431925	A.15
FEN46SA160KJF	431928	A.17
FEN46SA250KKF	431931	A.17
FEN46TA025JF	435214	A.13
FEN46TA032JF	435217	A.13
FEN46TA040JF	435220	A.13
FEN46TA050JF	435223	A.13
FEN46TA063JF	435226	A.13
FEN46TA080JF	431949	A.13
FEN46TA100JF	431955	A.13
FEN46TA125JF	431961	A.13
FEN46TA160JF	431967	A.13
FEN46TD100JF	433061	A.13
FEN46TD125JF	433067	A.13
FEN46TD125KF	433070	A.16
FEN46TD160JF	433073	A.13
FEN46TD160KF	433076	A.16
FEN46TD200KF	433079	A.16
FEN46TD250KF	433082	A.16
FEN46TG100JF	435250	A.13
FEN46TG125JF	435253	A.13
FEN46TG160JF	435259	A.13
FEN46TG160KF	435262	A.16
FEN46TG200KF	435265	A.16
FEN46TG250KF	435268	A.16
FENFT	433531	A.19
FENR4	432099	A.19
FENRC/5	436491	A.19
FENRCV/5	436492	A.19
FENRD/5	436493	A.19
FENRDV/5	436494	A.19
FENRF/5	436495	A.19
FENRFV/	436496	A.19
FENRW	432120	A.19
FENRX/5	436499	A.44
FENRY/5	436500	A.19
FENRYV/5	436501	A.19
FENRZ/5	436502	A.19
FENRZV/5	436503	A.19
FEQDB3HJ/	431118	A.19
FEQDB3HK/	431124	A.19
FEQDB3MJ/	431136	A.19
FEQDB3MK/	431139	A.19
FEQDB4HJ/6	431145	A.19
FEQDB4HK/6	431151	A.19
FEQDB4MJ/6	431159	A.19
FEQDB4MK/6	431161	A.19
FERJ3B0016	432174	A.14
FERJ3B0025	432177	A.14
FERJ3E0040	432180	A.14
FERJ3E0063	432183	A.14
FERJ3G0080	432186	A.14
FERJ3G0125	432192	A.14
FERJ3J0100	432189	A.14
FERJ3J0160	432195	A.14
FERJ3K0160	432204	A.17
FERJ3K0250	432207	A.17
FERJ43B0016	432210	A.14
FERJ43B0025	432213	A.14
FERJ43E0040	432216	A.14
FERJ43E0063	432219	A.14
FERJ43G0080	432222	A.14
FERJ43G0125	432228	A.14
FERJ43J0100	432225	A.14
FERJ43J0160	432231	A.14
FERJ43K0160	432240	A.17
FERJ43K0250	432243	A.17
FERJ45E0063	432249	A.14
FERJ45G0080	432252	A.14
FERJ45G0125	432258	A.14
FERJ45J0100	432255	A.14
FERJ45J0160	432261	A.14
FERJ45K0160	432270	A.17
FERJ45K0250	432273	A.17
FERJ4B0016	432276	A.14
FERJ4B0025	432279	A.14
FERJ4E0040	432282	A.14
FERJ4E0063	432285	A.14
FERJ4G0080	432288	A.14
FERJ4G0125	432294	A.14
FERJ4J0100	432291	A.14
FERJ4J0160	432297	A.14
FERJ4K0160	432306	A.17
FERJ4K0250	432309	A.17
FERS3B0025	432312	A.15
FERS3E0063	432315	A.15
FERS3G0125	432318	A.15
FERS3J0160	432321	A.15
FERS3K0250	432327	A.17
FERS43B0025	432330	A.15
FERS43E0063	432333	A.15
FERS43G0125	432336	A.15
FERS43J0160	432339	A.15
FERS43K0250	432345	A.17
FERS45E0063	432348	A.15
FERS45G0125	432351	A.15
FERS45J0160	432354	A.15
FERS45K0250	432360	A.17
FERS4B0025	432363	A.15
FERS4E0063	432366	A.15
FERS4G0125	432369	A.15
FERS4J0160	432372	A.15
FERS4K0250	432378	A.17
FETAA3J0025	432414	A.48
FETAA3J0063	432417	A.48
FETAA3J0125	432420	A.48
FETAA3J0160	432423	A.48
FETAA3K0125	432004	A.49
FETAA3K0160	432426	A.49
FETAA3K0250	432429	A.49
FETAA4J0025	432432	A.48
FETAA4J0063	432435	A.48
FETAA4J0125	432438	A.48
FETAA4J0160	432441	A.48
FETAA4K0125	432007	A.49
FETAA4K0160	432444	A.49
FETAA4K0250	432447	A.49
FETCA1316	432156	A.21
FETCA1320	432157	A.21
FETCA1323	432160	A.21
FETCA1416	432158	A.21
FETCA1420	432159	A.21
FETCA1423	432161	A.21
FETCA630A	880954	A.21
FETCA640A	880955	A.21
FETD30J0160	432480	A.48
FETD30K0250	432483	A.49
FETD40J0160	432486	A.48
FETD40K0250	432489	A.49
FETMC3J0012	432495	A.48
FETMC3J0020	432498	A.48
FETMC3J0030	434736	A.48
FETMC3J0050	432501	A.48
FETMC3J0080	436078	A.48
FETMC3J0100	432504	A.48
FETMC3J0125	436358	A.48
FETMC3J0160	432510	A.48
FETMC3K0160	432513	A.49
FETMC3K0200	436778	A.49
FETMC3K0250	432516	A.49
FETMC43J0050	432528	A.48
FETMC43J0100	432531	A.48
FETMC43J0125	436359	A.48
FETMC43J0160	432537	A.48
FETMC43K0160	432540	A.49
FETMC43K0200	436779	A.49
FETMC43K0250	432543	A.49
FETTA3J0025	432546	A.48
FETTA3J0032	432549	A.48
FETTA3J0040	432552	A.48
FETTA3J0050	432555	A.48
FETTA3J0063	432558	A.48
FETTA3J0080	432561	A.48
FETTA3J0100	432564	A.48
FETTA3J0125	432567	A.48
FETTA3J0160	432570	A.48
FETTA43J0025	432391	A.48
FETTA43J0032	432394	A.48
FETTA43J0040	432397	A.48
FETTA43J0050	432400	A.48
FETTA43J0063	432403	A.48
FETTA43J0080	432406	A.48
FETTA43J0100	432409	A.48
FETTA43J0125	432412	A.48
FETTA43J0160	432582	A.48
FETTA45J0063	432603	A.48
FETTA45J0080	432606	A.48
FETTA45J0100	432609	A.48
FETTA45J0125	432612	A.48
FETTA45J0160	432615	A.48
FETTA4J0025	432636	A.48
FETTA4J0032	432639	A.48
FETTA4J0040	432642	A.48
FETTA4J0050	432645	A.48
FETTA4J0063	432648	A.48
FETTA4J0080	432651	A.48
FETTA4J0100	432654	A.48
FETTA4J0125	432657	A.48
FETTA4J0160	432660	A.48
FETTD3J0100	433159	A.48
FETTD3J0125	433164	A.48
FETTD3J0160	433168	A.48
FETTD3K0125	433182	A.49
FETTD3K0160	433186	A.49
FETTD3K0200	433191	A.49
FETTD3K0250	433195	A.49
FETTD43J0100	433201	A.48
FETTD43J0125	433204	A.48
FETTD43J0160	433207	A.48
FETTD43K0125	433216	A.49
FETTD43K0160	433219	A.49
FETTD43K0200	433222	A.49
FETTD43K0250	433225	A.49
FETTD45J0100	433231	A.48
FETTD45J0125	433234	A.48
FETTD45J0160	433239	A.48
FETTD45K0125	433252	A.49
FETTD45K0160	433257	A.49
FETTD45K0200	433260	A.49
FETTD45K0250	433263	A.49
FETTD4J0100	433269	A.48
FETTD4J0125	433272	A.48
FETTD4J0160	433275	A.48
FETTD4K0125	433284	A.49
FETTD4K0160	433287	A.49
FETTD4K0200	433290	A.49
FETTD4K0250	433293	A.49
FETTG3J0100	433296	A.48
FETTG3J0125	432693	A.48
FETTG3J0160	432696	A.48
FETTG3K0160	432705	A.49
FETTG3K0200	432708	A.49
FETTG3K0250	432711	A.49
FETTG43J0100	433311	A.48
FETTG43J0125	432717	A.48
FETTG43J0160	432720	A.48
FETTG43K0160	432729	A.49
FETTG43K0200	432732	A.49
FETTG43K0250	432735	A.49
FETTG45J0100	433326	A.48
FETTG45J0125	432741	A.48
FETTG45J0160	432744	A.48
FETTG45K0160	432753	A.49
FETTG45K0200	432756	A.49
FETTG45K0250	432759	A.49
FETTG4J0100	433332	A.48
FETTG4J0125	432774	A.48
FETTG4J0160	432777	A.48
FETTG4K0160	432786	A.49
FETTG4K0200	432789	A.49
FETTG4K0250	432792	A.49
FEUA3	432162	A.22
FEUA4	432163	A.22
FEUT	433540	A.22
FEV36T5A125KF	431219	A.18
FEV36T5A160KF	431220	A.18
FEV36T5A200KF	431221	A.18
FEV36T5A225KF	431222	A.18
FEV36TA125KF	432416	A.16
FEV36TA160KF	436798	A.16
FEV36TA200KF	431058	A.16
FEV36TA250KF	431061	A.16
FEV46TA125KF	431082	A.16
FEV46TA160KF	436817	A.16
FEV46TA200KF	431094	A.16
FEV46TA250KF	431097	A.16
FEWA2	432589	A.20
FEWB3	432538	A.20
FEWB4	432544	A.20
FEWM	432583	A.20
FEWN	432586	A.20
FEWT	432580	A.20
FEY306D160JF	431988	A.15
FEY306D250KF	431991	A.17
FEY406D160JF	431994	A.15
FEY406D250KF	431997	A.17
FG...		
FG1BPE	431403	A.30
FG1BRE	431404	A.30
FG1I2	437005	A.45
FG1I4	437009	A.45
FG1PF	431408	A.33
FG1PR	431409	A.33
FGDDF3	430944	A.31
FGDDF4	431064	A.31
FGDFF3	431983	A.31
FGDFF4	431986	A.31
FGDMP3	432796	A.31
FGDMP4	432799	A.31
FGEMF8	432811	A.30
FGEMFD	432817	A.30
FGEMFF	432820	A.30
FGEMFH	432823	A.30
FGEMFJ	432826	A.30
FGEMFN	432829	A.30
FGFE	430544	A.33
FGFH	430545	A.33
FGFT	432836	A.33
FGGS0250	431870	A.33
FGGS0400	432838	A.33
FGGS0630	432839	A.33
FGH306F250LF	434231	A.50
FGH306F400LF	431050	A.50
FGH306F400NF	431067	A.51
FGH306F630NF	431073	A.51
FGH36AA250LKF	434232	A.25
FGH36AA400LLF	431032	A.25
FGH36AA400NLF	433142	A.27
FGH36AA500NNF	434600	A.27
FGH36AA630NNF	431038	A.27
FGH36BM400LLF	434663	A.25
FGH36BM500NNF	434666	A.27
FGH36JA5400LLF	431303	A.29
FGH36JA5500NNF	431301	A.29
FGH36KA250LKF	436150	A.26
FGH36KA350LLF	434393	A.26
FGH36KA400LLF	436151	A.26
FGH36KA400NLF	436152	A.28
FGH36KA500NNF	434606	A.28
FGH36KA630NNF	434028	A.28
FGH36SA250LKF	434233	A.25
FGH36SA400LLF	434399	A.25
FGH36SA400NLF	431091	A.27
FGH36SA500NNF	434612	A.27
FGH36VA400LLF	434953	A.26
FGH36VA630NNF	434958	A.28
FGH406F250LF	434234	A.50
FGH406F400LF	431150	A.50
FGH406F400NF	431153	A.51
FGH406F630NF	431156	A.51
FGH436BM400LLF	434669	A.25
FGH436BM500NNF	434672	A.27
FGH436SA250LKF	434235	A.25
FGH436SA400LLF	434408	A.25
FGH436SA400NLF	431168	A.27
FGH436SA500NNF	434621	A.27
FGH436VA400LLF	434960	A.26
FGH436VA630NNF	434965	A.28
FGH456SA250LKF	434236	A.25
FGH456SA400LLF	434414	A.25
FGH456SA400NLF	431198	A.27
FGH456SA500NNF	434627	A.27
FGH456VA400LLF	434971	A.26
FGH456VA630NNF	434977	A.28
FGH46AA250LKF	434237	A.25
FGH46AA400LLF	431106	A.25
FGH46AA400NLF	434432	A.27
FGH46AA500NNF	434630	A.27
FGH46AA630NNF	431132	A.27
FGH46KA250LKF	434041	A.26
FGH46KA350LLF	434420	A.26
FGH46KA400LLF	434042	A.26
FGH46KA400NLF	434043	A.28
FGH46KA500NNF	434633	A.28
FGH46KA630NNF	434044	A.28
FGH46SA250LKF	434238	A.25
FGH46SA400LLF	434426	A.25
FGH46SA400NLF	431240	A.27
FGH46SA500NNF	434642	A.27
FGH46VA400LLF	434983	A.26
FGH46VA630NNF	435003	A.28
FGJB	432840	A.33
FGJM3	432846	A.33
FGJM4	432849	A.33
FGJN3	436469	A.31
FGJN4	436470	A.31
FGJP	432852	A.33
FGJS3	432855	A.33
FGJS4	432858	A.33
FGJW3	432861	A.33
FGJW4	432864	A.33
FGL306F250LF	434239	A.50
FGL306F400LF	431261	A.50
FGL306F400NF	431267	A.51
FGL306F630NF	431282	A.51
FGL36AA250LKF	434240	A.25
FGL36AA400LLF	431246	A.25
FGL36AA400NLF	434459	A.27
FGL36AA500NNF	434645	A.27
FGL36AA630NNF	431249	A.27
FGL36BM400LLF	434675	A.25
FGL36BM500NNF	434678	A.27
FGL36KA250LKF	434049	A.26
FGL36KA350LLF	434438	A.26
FGL36KA400LLF	434050	A.26

Cat. no.	Ref. no.	Page
FGL36KA400NLF	434051	A.28
FGL36KA500NNF	434651	A.28
FGL36KA630NNF	434052	A.28
FGL36SA250LKF	434241	A.25
FGL36SA400LLF	434444	A.25
FGL36SA400NLF	431309	A.27
FGL36SA500NNF	434657	A.27
FGL36VA400LLF	435065	A.26
FGL36VA630NNF	435071	A.28
FGL406F250LF	434242	A.50
FGL406F400LF	431351	A.50
FGL406F400NF	431354	A.51
FGL406F630NF	431357	A.51
FGL436BM400LLF	434681	A.25
FGL436BM500NNF	434684	A.27
FGL436SA250LKF	434243	A.25
FGL436SA400LLF	434453	A.25
FGL436SA400NLF	431372	A.27
FGL436SA500NNF	434758	A.27
FGL436VA400LLF	435077	A.26
FGL436VA630NNF	435091	A.28
FGL456SA250LKF	434244	A.25
FGL456SA400LLF	434462	A.25
FGL456SA400NLF	431425	A.27
FGL456SA500NNF	434764	A.27
FGL456VA400LLF	435095	A.26
FGL456VA630NNF	435122	A.28
FGL46AA250LKF	434245	A.25
FGL46AA400LLF	431330	A.25
FGL46AA400NLF	434534	A.27
FGL46AA500NNF	434770	A.27
FGL46AA630NNF	431333	A.27
FGL46KA250LKF	436153	A.26
FGL46KA350LLF	434468	A.26
FGL46KA400LLF	436154	A.26
FGL46KA400NLF	436155	A.28
FGL46KA500NNF	434782	A.28
FGL46KA630NNF	434068	A.28
FGL46SA250LKF	434246	A.25
FGL46SA400LLF	434474	A.25
FGL46SA400NLF	431449	A.27
FGL46SA500NNF	434806	A.27
FGL46VA400LLF	435128	A.26
FGL46VA630NNF	435134	A.28
FGN306F250LF	434247	A.50
FGN306F400LF	431473	A.50
FGN306F400NF	431488	A.51
FGN306F630NF	431491	A.51
FGN36AA250LKF	434248	A.25
FGN36AA400LLF	431455	A.25
FGN36AA400NLF	434561	A.27
FGN36AA500NNF	434812	A.27
FGN36AA630NNF	431461	A.27
FGN36BM400LLF	434687	A.25
FGN36BM500NNF	434690	A.27
FGN36JA5400LLF	431305	A.29
FGN36JA5500NNF	431304	A.29
FGN36KA250LKF	434073	A.26
FGN36KA350LLF	434483	A.26
FGN36KA400LLF	436156	A.26
FGN36KA400NLF	436157	A.28
FGN36KA500NNF	434824	A.28
FGN36KA630NNF	436158	A.28
FGN36SA250LKF	434249	A.25
FGN36SA400LLF	434489	A.25
FGN36SA400NLF	431530	A.27
FGN36SA500NNF	434835	A.27
FGN36VA400LLF	435140	A.26
FGN36VA630NNF	435146	A.28
FGN406F250LF	434250	A.50
FGN406F400LF	431548	A.50
FGN406F400NF	431554	A.51
FGN406F630NF	431560	A.51
FGN436BM400LLF	434693	A.25
FGN436BM500NNF	434696	A.27
FGN436SA250LKF	434251	A.25
FGN436SA400LLF	435277	A.25
FGN436SA400NLF	431596	A.27
FGN436SA500NNF	434848	A.27
FGN436VA400LLF	435152	A.26
FGN436VA630NNF	435158	A.28
FGN456SA250LKF	434252	A.25
FGN456SA400LLF	434504	A.25
FGN456SA400NLF	431626	A.27
FGN456SA500NNF	434860	A.27
FGN456VA400LLF	435164	A.26
FGN456VA630NNF	435167	A.28
FGN46AA250LKF	434253	A.25
FGN46AA400LLF	431536	A.25
FGN46AA400NLF	434636	A.27
FGN46AA500NNF	434866	A.27
FGN46AA630NNF	431539	A.27
FGN46KA250LKF	436159	A.26

Cat. no.	Ref. no.	Page
FGN46KA350LLF	434510	A.26
FGN46KA400LLF	436160	A.26
FGN46KA400NLF	436161	A.28
FGN46KA500NNF	434872	A.28
FGN46KA630NNF	434092	A.28
FGN46SA250LKF	434254	A.25
FGN46SA400LLF	435280	A.25
FGN46SA400NLF	431650	A.27
FGN46SA500NNF	434884	A.27
FGN46VA400LLF	435170	A.26
FGN46VA630NNF	435176	A.28
FGNFT	432867	A.30
FGNRC/5	436504	A.30
FGNRCV/5	436505	A.30
FGNRD/5	436506	A.30
FGNRDV/5	436507	A.30
FGNRE	434735	A.30
FGNRF/5	436509	A.30
FGNRFV/5	436510	A.30
FGNRW	433892	A.30
FGNRX/5	436512	A.44
FGNRY/5	436513	A.30
FGNRYV/5	436514	A.30
FGNRZ/5	436515	A.30
FGNRZV/5	436516	A.30
FGQDB3H/6	431163	A.30
FGQDB3M/6	431172	A.30
FGQDB4H/6	431175	A.30
FGQDB4M/6	431181	A.30
FGRJ3LK0160	434337	A.25
FGRJ3LK0250	434341	A.25
FGRJ3LL0250	435343	A.25
FGRJ3LL0400	433151	A.25
FGRJ3NL0250	433148	A.27
FGRJ3NL0400	435182	A.27
FGRJ3NN0400	433154	A.27
FGRJ3NN0630	433157	A.27
FGRJ43LK0160	434345	A.25
FGRJ43LK0250	434349	A.25
FGRJ43LL0250	435356	A.25
FGRJ43LL0400	433163	A.25
FGRJ43NL0250	433160	A.27
FGRJ43NL0400	435188	A.27
FGRJ43NN0400	433166	A.27
FGRJ43NN0630	433169	A.27
FGRJ45LK0160	434353	A.25
FGRJ45LK0250	434357	A.25
FGRJ45LL0250	435367	A.25
FGRJ45LL0400	433175	A.25
FGRJ45NL0250	433172	A.27
FGRJ45NL0400	435194	A.27
FGRJ45NN0400	433178	A.27
FGRJ45NN0630	433181	A.27
FGRJ4LK0160	434361	A.25
FGRJ4LK0250	434365	A.25
FGRJ4LL0250	435397	A.25
FGRJ4LL0400	433187	A.25
FGRJ4NL0250	433184	A.27
FGRJ4NL0400	435200	A.27
FGRJ4NN0400	433190	A.27
FGRJ4NN0630	433193	A.27
FGRL3LK0160/7	436749	A.26
FGRL3LK0250/7	436656	A.26
FGRL3LL0250/7	436747	A.26
FGRL3LL0350/7	436748	A.26
FGRL3LL0400/7	436721	A.26
FGRL3NL0250/7	436739	A.28
FGRL3NL0400/7	436746	A.28
FGRL3NN0400/7	436726	A.28
FGRL3NN0500/7	436738	A.28
FGRL3NN0630/7	436722	A.28
FGRL43LK0160 /7	434469	A.26
FGRL43LK0160/7	434469	A.50
FGRL43LK0250 /7	434615	A.26
FGRL43LK0250/7	434615	A.50
FGRL43LL0250 /7	434599	A.26
FGRL43LL0250/7	434599	A.50
FGRL43LL0350 /7	434601	A.26
FGRL43LL0350/7	434601	A.50
FGRL43LL0400 /7	434617	A.26
FGRL43LL0400/7	434617	A.50
FGRL43NL0250 /7	434588	A.28
FGRL43NL0250/7	434588	A.51
FGRL43NL0400 /7	434590	A.28
FGRL43NL0400/7	434590	A.51
FGRL43NN0400 /7	434605	A.28
FGRL43NN0400/7	434605	A.51
FGRL43NN0500 /7	434607	A.28
FGRL43NN0500/7	434607	A.51
FGRL43NN0630 /7	434622	A.28
FGRL43NN0630/7	434622	A.51
FGRL45LK0160 /7	434472	A.26
FGRL45LK0160/7	434472	A.50

Cat. no.	Ref. no.	Page
FGRL45LK0250 /7	434481	A.26
FGRL45LK0250/7	434481	A.50
FGRL45LL0250 /7	434579	A.26
FGRL45LL0250/7	434579	A.50
FGRL45LL0350 /7	434596	A.26
FGRL45LL0350/7	434596	A.50
FGRL45LL0400 /7	434482	A.26
FGRL45LL0400/7	434482	A.50
FGRL45NL0250 /7	434592	A.28
FGRL45NL0250/7	434592	A.51
FGRL45NL0400 /7	434594	A.28
FGRL45NL0400/7	434594	A.51
FGRL45NN0400 /7	434581	A.28
FGRL45NN0400/7	434581	A.51
FGRL45NN0500 /7	434597	A.28
FGRL45NN0500/7	434597	A.51
FGRL45NN0630 /7	434624	A.28
FGRL45NN0630/7	434624	A.51
FGRL4LK0160/7	434559	A.26
FGRL4LK0250/7	434562	A.26
FGRL4LL0250/7	434568	A.26
FGRL4LL0350/7	434582	A.26
FGRL4LL0400/7	434584	A.26
FGRL4NL0250/7	434492	A.28
FGRL4NL0400/7	434493	A.28
FGRL4NN0400/7	434496	A.28
FGRL4NN0500/7	434502	A.28
FGRL4NN0630/7	434532	A.28
FGRS3LK0250	434303	A.25
FGRS3LL0400	435435	A.25
FGRS3NL0400	433235	A.27
FGRS3NN0500	434512	A.27
FGRS43LK0250	434307	A.25
FGRS43LL0400	434516	A.25
FGRS43NL0400	433241	A.27
FGRS43NN0500	434521	A.27
FGRS45LK0250	434311	A.25
FGRS45LL0400	434525	A.25
FGRS45NL0400	433247	A.27
FGRS45NN0500	434530	A.27
FGRS4LK0250	434315	A.25
FGRS4LL0400	434537	A.25
FGRS4NL0400	433253	A.27
FGRS4NN0500	434542	A.27
FGTAA3L0250	434319	A.50
FGTAA3L0400	431718	A.50
FGTAA3N0400	431721	A.51
FGTAA3N0500	434893	A.51
FGTAA3N0630	431736	A.51
FGTAA4L0250	434323	A.50
FGTAA4L0400	431742	A.50
FGTAA4N0400	431745	A.51
FGTAA4N0500	434899	A.51
FGTAA4N0630	431748	A.51
FGTKA3L0250	434201	A.50
FGTKA3L0350	434902	A.50
FGTKA3L0400	434202	A.50
FGTKA3N0400	434203	A.51
FGTKA3N0500	434905	A.51
FGTKA3N0630	434204	A.51
FGTKA4L0250	434205	A.50
FGTKA4L0350	434908	A.50
FGTKA4L0400	434261	A.50
FGTKA4N0400	434263	A.51
FGTKA4N0500	434911	A.51
FGTKA4N0630	434265	A.51
FGUA3	432908	A.33
FGUA4	432909	A.33
FGUT	433541	A.33
FGWA2	432601	A.31
FGWA3	432604	A.31
FGWB3	432550	A.31
FGWB4	432556	A.31
FGWM	432595	A.31
FGWN	432598	A.31
FGWT	432592	A.31
FGY306D400LF	431659	A.26
FGY306D630NF	431665	A.28
FGY406D400LF	431671	A.26
FGY406D630NF	431687	A.28
FK...		
FKF1S	436884	A.38
FKF2S	436885	A.38
FKF3S	436886	A.38
FKF6S	436887	A.38
FKH36NE100SQF	435288	A.36
FKH36NE125SSF	435276	A.36
FKH36NE160TTF	435279	A.37
FKH36NE800PPF	435285	A.35
FKH36NG100SQF	435306	A.36
FKH36NG125SSF	435294	A.36
FKH36NG160TTF	435297	A.37
FKH36NG800PPF	435303	A.35

Cat. no.	Ref. no.	Page
FKH36NM125SF	435559	A.36
FKH36NM800PF	435538	A.35
FKH36NS100SQF	435324	A.36
FKH36NS125SSF	435312	A.36
FKH36NS160TTF	435315	A.37
FKH36NS800PPF	435321	A.35
FKH36NT100SF	435553	A.36
FKH36NT125SF	435554	A.36
FKH36NT630PF	435426	A.35
FKH36NT800PF	435318	A.35
FKH436NM125SF	435571	A.36
FKH436NM800PF	435542	A.35
FKH436NT100SF	435565	A.36
FKH436NT125SF	435566	A.36
FKH436NT630PF	435462	A.35
FKH436NT800PF	435354	A.35
FKH46NE100SQF	435342	A.36
FKH46NE125SSF	435330	A.36
FKH46NE160TTF	435333	A.37
FKH46NE800PPF	435339	A.35
FKH46NG100SQF	435360	A.36
FKH46NG125SSF	435348	A.36
FKH46NG160TTF	435351	A.37
FKH46NG800PPF	435357	A.35
FKH46NS100SQF	435378	A.36
FKH46NS125SSF	435366	A.36
FKH46NS160TTF	435369	A.37
FKH46NS800PPF	435375	A.35
FKL36NE100SQF	435545	A.36
FKL36NE125SSF	435546	A.36
FKL36NE800PPF	435390	A.35
FKL36NM125SF	435561	A.36
FKL36NM800PF	435539	A.35
FKL36NT100SF	435555	A.36
FKL36NT125SF	435557	A.36
FKL36NT630PF	435480	A.35
FKL36NT800PF	435372	A.35
FKL436NM125SF	435573	A.36
FKL436NM800PF	435543	A.35
FKL436NT100SF	435567	A.36
FKL436NT125SF	435569	A.36
FKL436NT630PF	435534	A.35
FKL436NT800PF	435535	A.35
FKL46NE100SQF	435547	A.36
FKL46NE125SSF	435549	A.36
FKL46NE800PPF	435282	A.35
FKMF1P	436880	A.38
FKMF2P	436881	A.38
FKMF3P	436882	A.38
FKMF6P	436883	A.38
FKN36NE100SQF	435396	A.36
FKN36NE125SSF	435384	A.36
FKN36NE160TTF	435387	A.37
FKN36NE800PPF	435393	A.35
FKN36NG100SQF	435414	A.36
FKN36NG125SSF	435402	A.36
FKN36NG160TTF	435405	A.37
FKN36NG800PPF	435411	A.35
FKN36NM125SF	435558	A.36
FKN36NM800PF	435537	A.35
FKN36NS100SQF	435432	A.36
FKN36NS125SSF	435420	A.36
FKN36NS160TTF	435423	A.37
FKN36NS800PPF	435429	A.35
FKN36NT100SF	435550	A.36
FKN36NT125SF	435551	A.36
FKN36NT630PF	435444	A.35
FKN36NT800PF	435336	A.35
FKN436NM125SF	435570	A.36
FKN436NM800PF	435541	A.35
FKN436NT100SF	435562	A.36
FKN436NT125SF	435563	A.36
FKN436NT630PF	435408	A.35
FKN436NT800PF	435300	A.35
FKN46NE100SQF	435450	A.36
FKN46NE125SSF	435438	A.36
FKN46NE160TTF	435441	A.37
FKN46NE800PPF	435447	A.35
FKN46NG100SQF	435468	A.36
FKN46NG125SSF	435456	A.36
FKN46NG160TTF	435459	A.37
FKN46NG800PPF	435465	A.35
FKN46NS100SQF	435486	A.36
FKN46NS125SSF	435474	A.36
FKN46NS160TTF	435477	A.37
FKN46NS800PPF	435483	A.35
FKUE3	434801	A.38
FKUE4	434802	A.38
FKV36NE100SQF	435040	A.36
FKV36NE125SSF	435035	A.36
FKV36NE160TTF	435032	A.37
FKV36NE800PPF	435041	A.35
FKV36NT100SF	435028	A.36

Cat. no.	Ref. no.	Page
FKV36NT125SF	435030	A.36
FKV36NT800PF	435005	A.35
FKV46NE100SQF	435066	A.36
FKV46NE125SSF	435083	A.36
FKV46NE160TTF	435092	A.37
FKV46NE800PPF	435042	A.35
FKV46NT100SF	435086	A.36
FKV46NT125SF	435089	A.36
FKV46NT800PF	435064	A.35
FKY306DN100SF	435381	A.37
FKY306DN125SF	435489	A.37
FKY306DN160TF	435492	A.37
FKY306DN800PF	435495	A.37
FKY406DN100SF	435273	A.37
FKY406DN125SF	435498	A.37
FKY406DN160TF	435501	A.37
FKY406DN800PF	435504	A.37
FKZD	434803	A.40
FN...		
FN1BPE	435678	A.38
FN1BRE	435679	A.38
FN1BRW1	435575	A.39
FN1BRW2	435577	A.39
FN1BRY1	433415	A.39
FN1BRY2	435574	A.39
FN1I2F	433416	A.45
FN1I4F	437016	A.45
FN1PR	433417	A.40
FNBA11R	435761	A.38
FNBES3P	435706	A.39
FNBES3R	433420	A.39
FNBES4P	435707	A.39
FNBES4R	433422	A.39
FNBRC3	433423	A.39
FNBRC4	433425	A.39
FNBRCS3	433426	A.39
FNBRCS4	433427	A.39
FNBSS3P	435708	A.39
FNBSS3R	435710	A.39
FNBSS4P	435711	A.39
FNBSS4R	435712	A.39
FNEMF3/M	436323	A.38
FNEMF6/M	436324	A.38
FNEMFD/M	436322	A.38
FNEMFF/M	436321	A.38
FNEMFJ/M	436458	A.38
FNEMFN/M	436459	A.38
FNFE	435713	A.40
FNFH	435714	A.40
FNFT	435715	A.40
FNFW	435578	A.39
FNGS0800	433419	A.40
FNGS1000	433421	A.40
FNGS1250	435709	A.40
FNGS1600	436471	A.40
FNJF	434804	A.40
FNJL3	435716	A.40
FNJL4	435719	A.40
FNJP	435722	A.40
FNNRC/5	436517	A.38
FNNRCV/5	436518	A.38
FNNRD/5	436519	A.38
FNNRDV/5	436520	A.38
FNNRE	435738	A.38
FNNRF/5	436522	A.38
FNNRFV/5	436524	A.38
FNNRW	435745	A.38
FNNRX/5	436526	A.44
FNNRY/5	436527	A.38
FNNRYV/5	436528	A.38
FNNRZ/5	436530	A.38
FNNRZV/5	436531	A.38
FNPFM	435758	A.39
FNS11L	435760	A.39
FNS11R	436401	A.38
FNSHT8	435692	A.38
FNSHTD	435693	A.38
FNSHTF	435694	A.38
FNSHTJ	435695	A.38
FNSHTN	435696	A.38
FNTCA3327	436316	A.39
FNTCA3427	436651	A.39
FNTCA4327	433438	A.39
FNTCA4427	433439	A.39
FNUA3	435762	A.40
FNUA4	435763	A.40
FNUT	435764	A.40
FNUVD6	435697	A.38
FNUVR1	435698	A.38
FNUVR6	435699	A.38
FNUVR8	435700	A.38
FNUVRD	435701	A.38
FNUVRF	435702	A.38

Cat. no.	Ref. no.	Page
FNUVRJ	437018	A.44
FNWS3AP	433436	A.39
FNWS3AT	435757	A.39
FNWS3WP	433434	A.39
FNWS3WT	436482	A.39
FNWS4AP	433440	A.39
FNWS4AT	435759	A.39
FNWS4WP	436481	A.39
FNWS4WT	433442	A.39
RD...		
RD1D 110	872225	A.39
RD1D 220	872224	A.39
RD1D 380	872226	A.39
RD5 110	704175	A.39
RD5 220	704169	A.39
RD5 380	704176	A.39
RD6 110	704178	A.39
RD6 220	704177	A.39
RD6 380	704179	A.39
RDFR	872227	A.39
TT...		
TT 110	872757	A.39
TT 160	872758	A.39
TT 210	872759	A.39
TT 35	872754	A.39
TT 60	872755	A.39
TT 80	872756	A.39
TTD 22	560090	A.39
TTO 110	872761	A.39
TTO 210	872762	A.39
TTO 60	872760	A.39

The policy of GE Energy is one of continuous improvement.
The right is reserved to alter the design or any structural details of the products at any time without giving notice.

September 2011
GE Industrial Solutions

GE Energy
Industrial Solutions

Industrial Solutions (formerly Power Protection), a division of GE Energy, is a first class European supplier of low and medium voltage products including wiring devices, residential and industrial electrical distribution components, automation products, enclosures and switchboards. Demand for the company's products comes from wholesalers, installers, panelboard builders, contractors, OEMs and utilities worldwide.

www.ge.com/ex/industrialsolutions

General Electric International, Inc
1101, City Tower 2, Sheikh Zayed Road
P.O. Box 11549, Dubai
United Arab Emirates
Tel. +9714 313 1202

Customer Service MEA
Tel. +361 447 6046
Fax +361 447 5060
e-mail: mea.export.consind@ge.com

GE INDUSTRIAL BELGIUM
International Sales
Nieuwevaart 51
B-9000 Gent - Belgium
Tel. +32 (0)9 265 21 11
Fax +32 (0)9 265 28 00
e-mail: gepcbel@gepc.ge.com

GE imagination at work

680860
Ref. I/3278/E/X 4.0 Ed. 09/11
© Copyright GE Industrial Solutions 2011